PROLINE G2

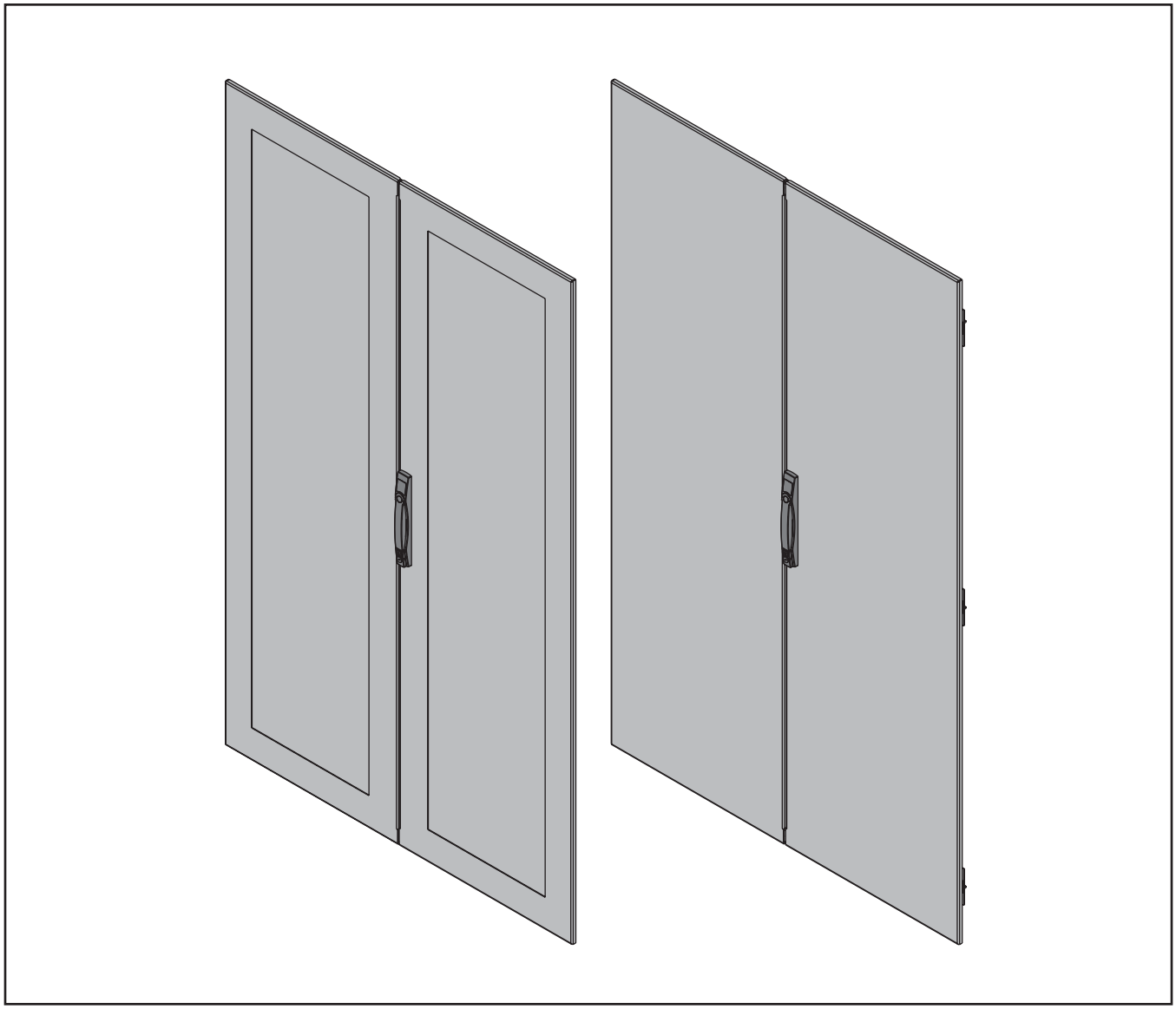

© 2018 Hoffman Enclosures Inc.

1 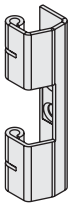 (6x)	2 (6x)	3 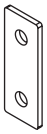 (6x)	4 (6x)
5 M6X16 (6x)	6 (1x)	7 (1x)	

© 2018 Hoffman Enclosures Inc.

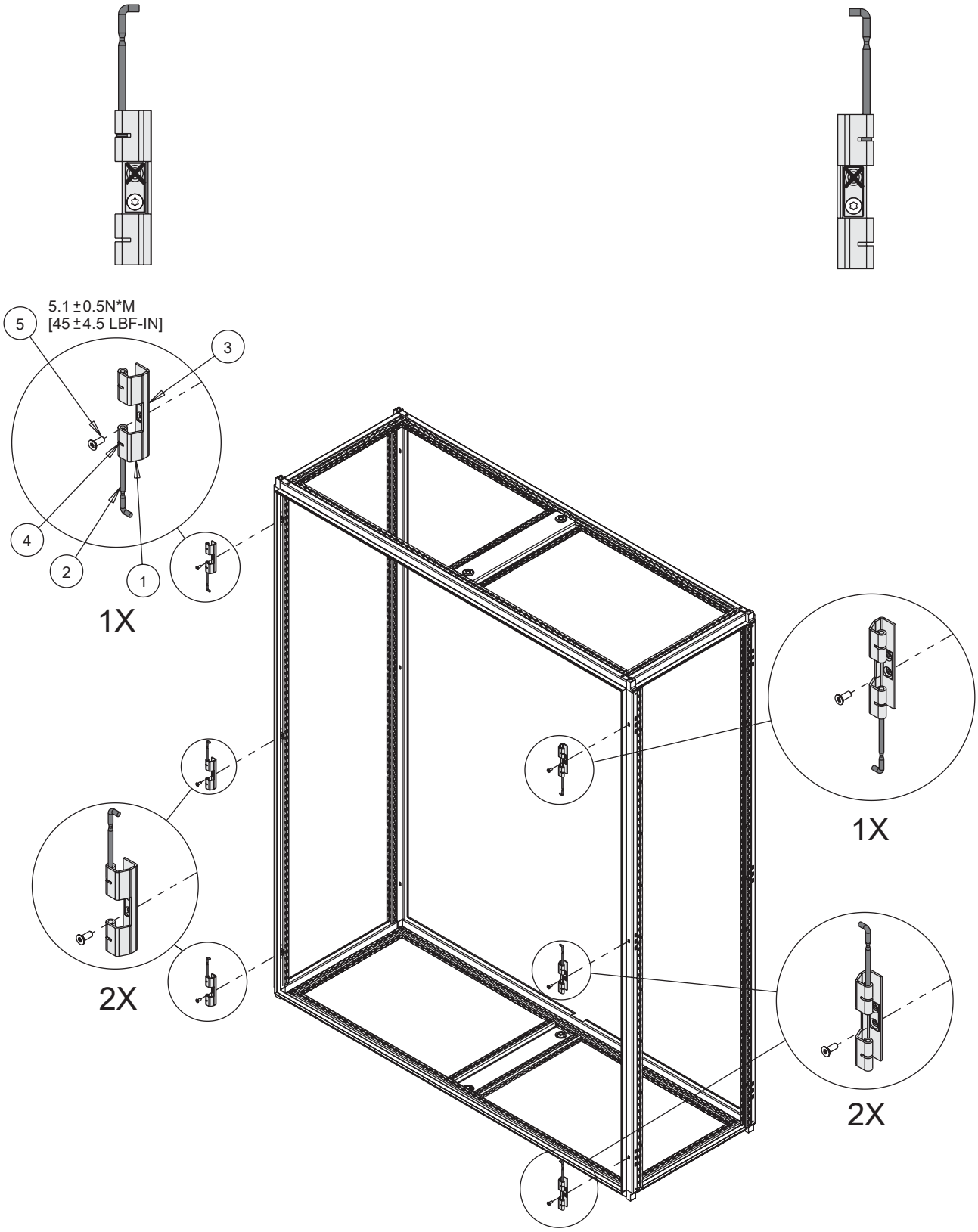

1

© 2018 Hoffman Enclosures Inc.

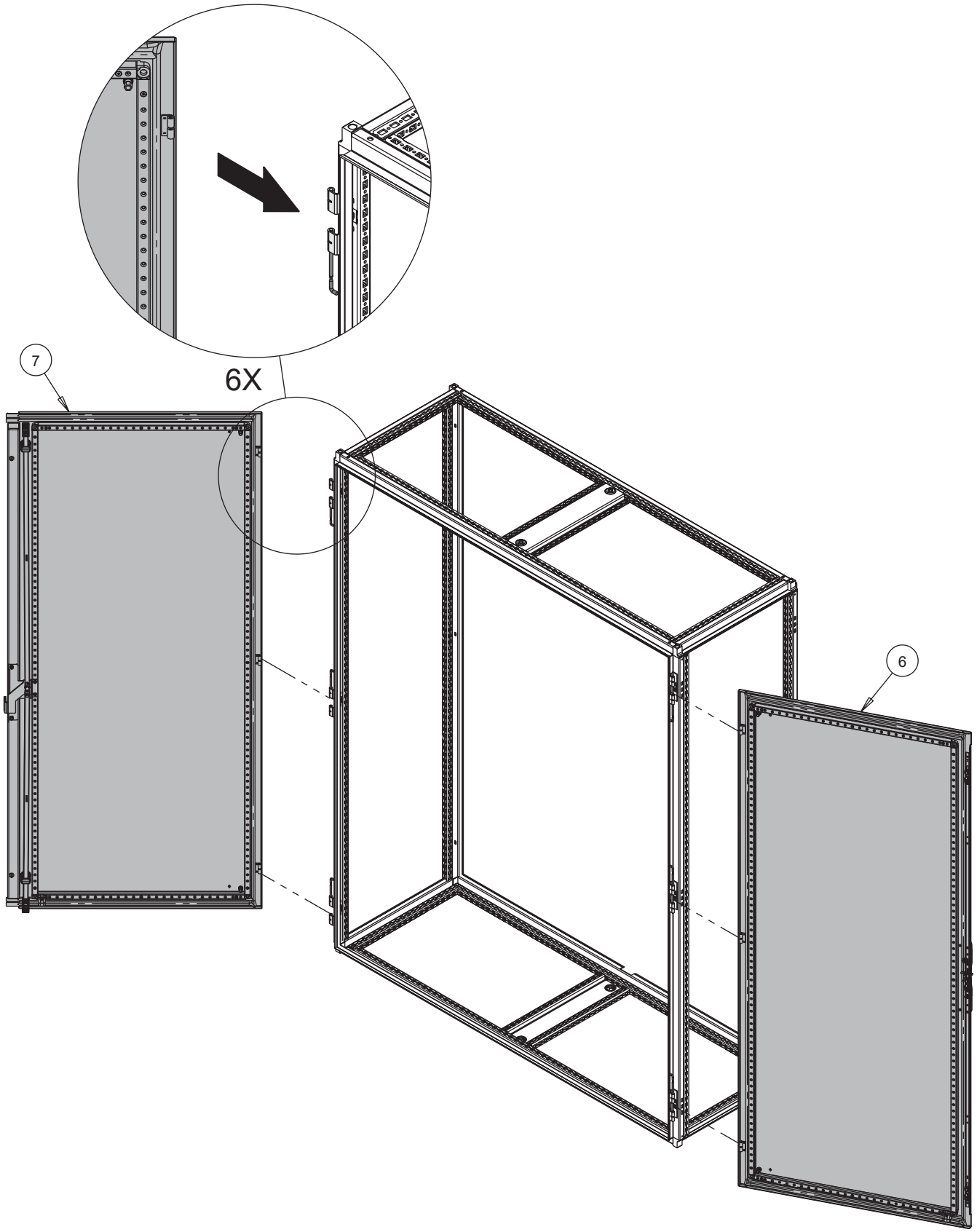

2

© 2018 Hoffman Enclosures Inc.

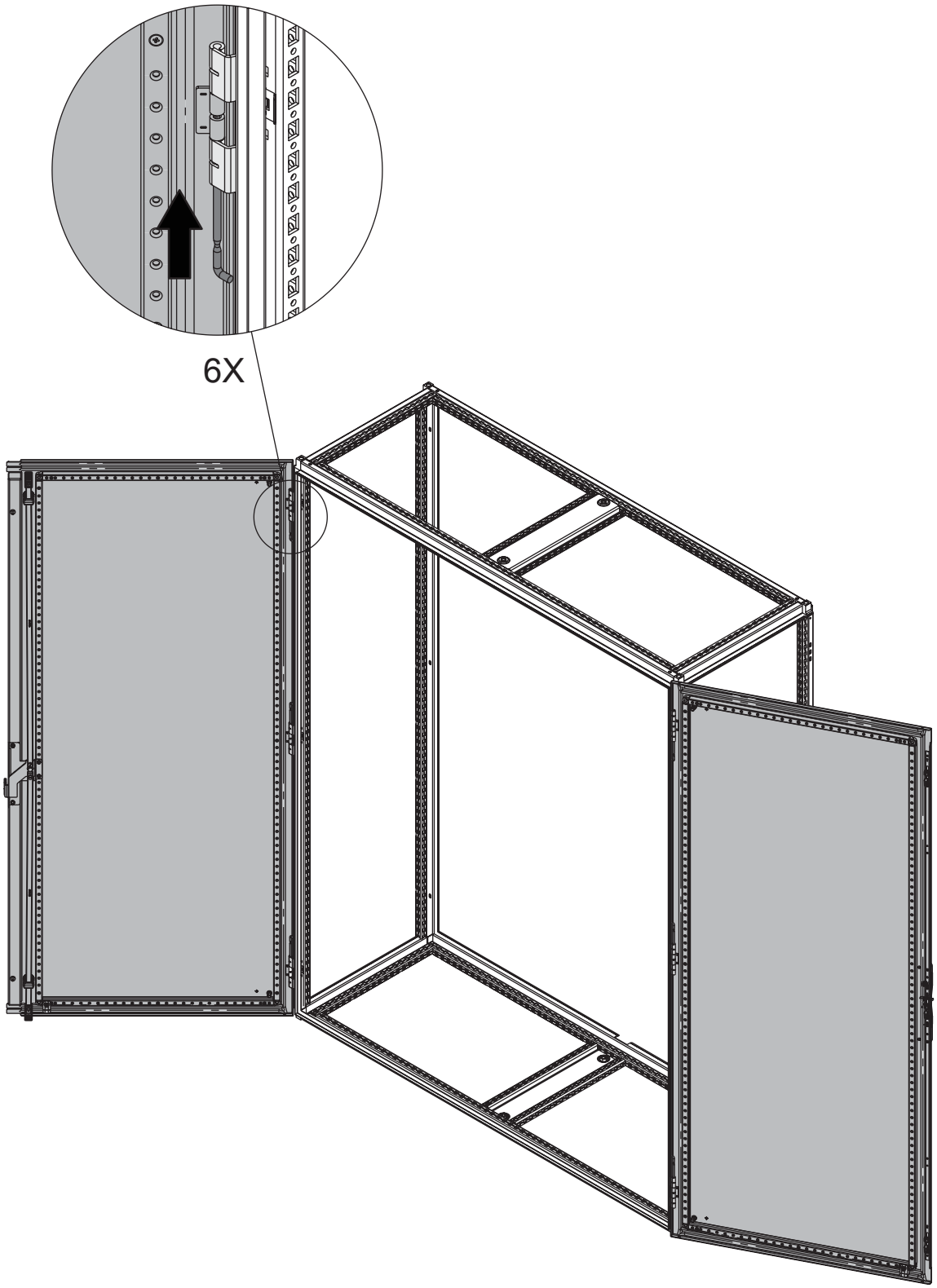

3

© 2018 Hoffman Enclosures Inc.

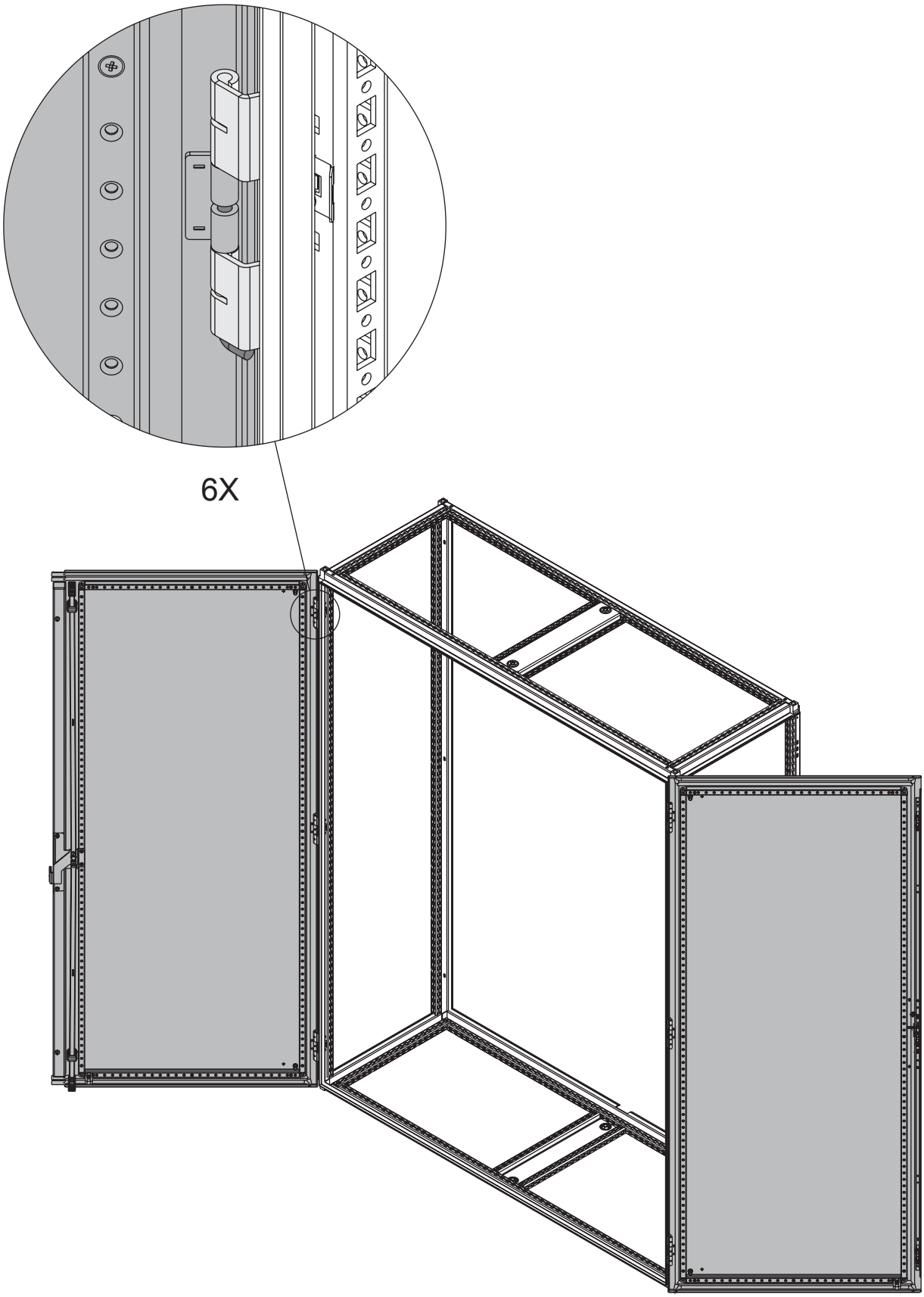

4

© 2018 Hoffman Enclosures Inc.

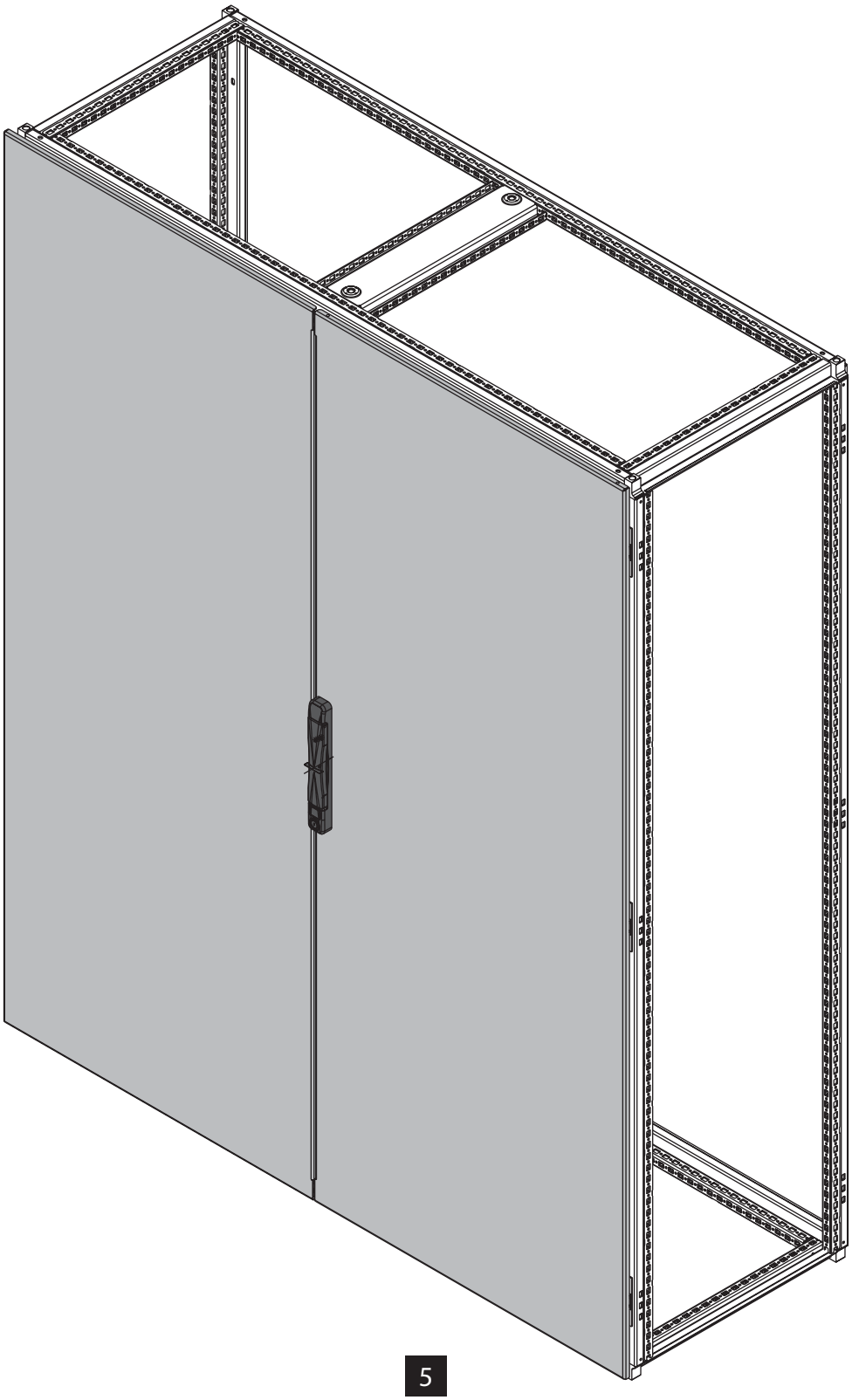

5

© 2018 Hoffman Enclosures Inc.

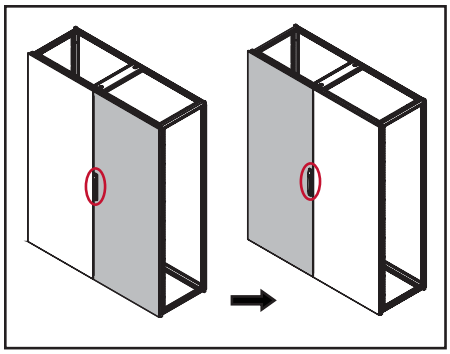

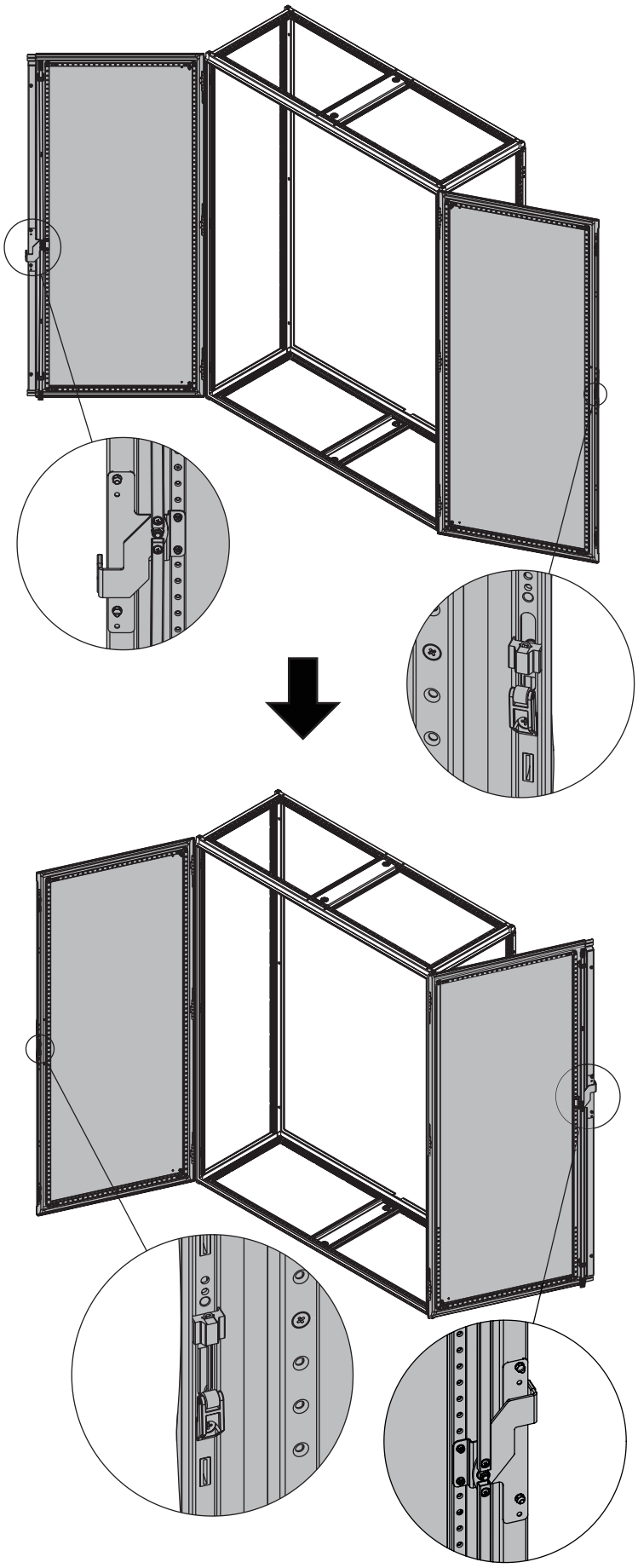

1

© 2018 Hoffman Enclosures Inc.

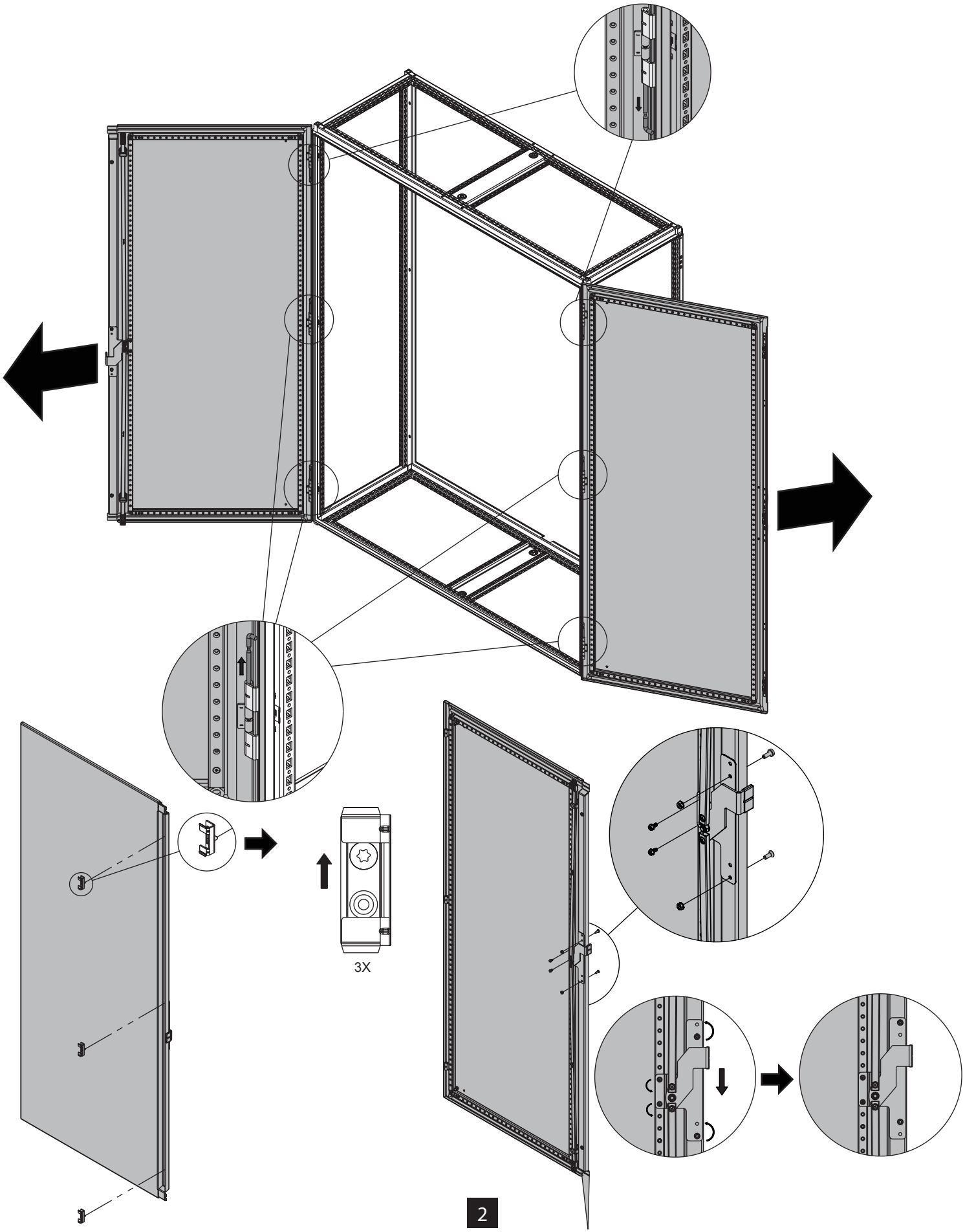

© 2018 Hoffman Enclosures Inc.

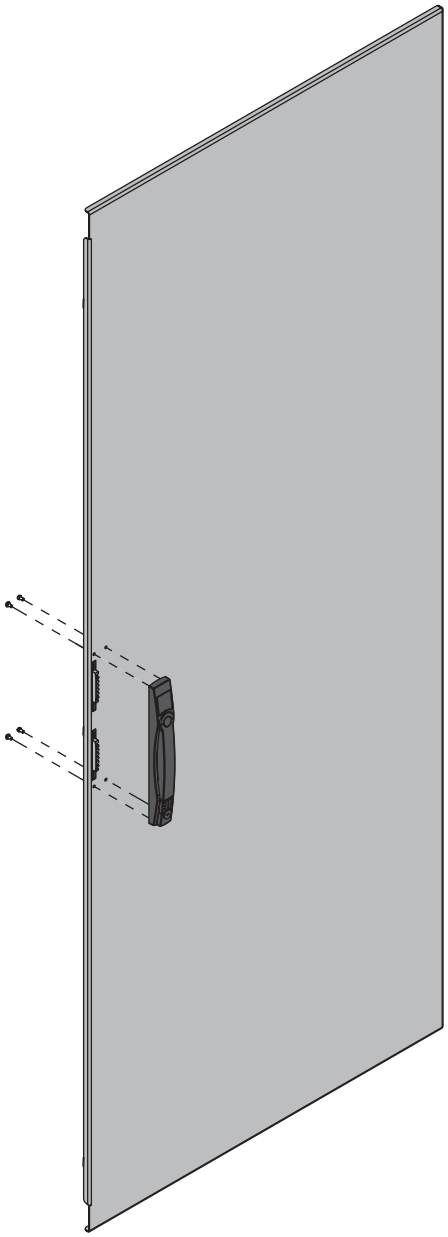

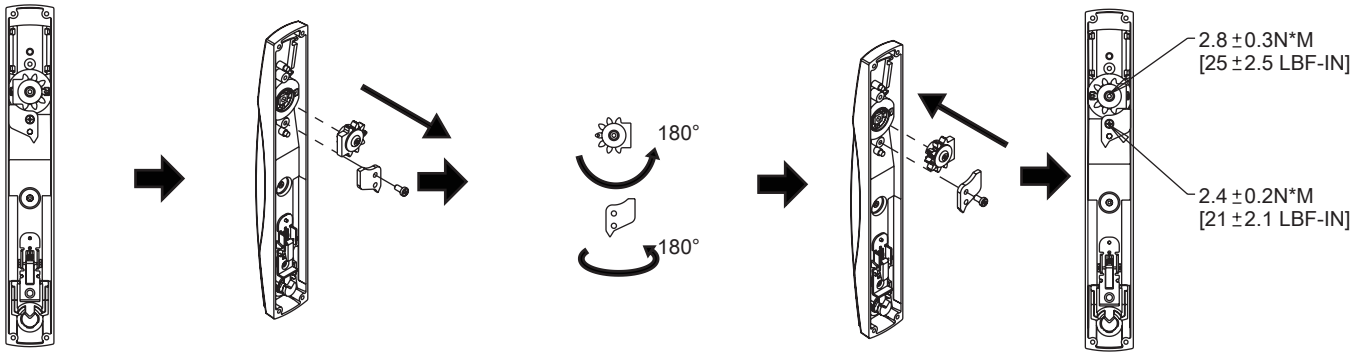

3

© 2018 Hoffman Enclosures Inc.

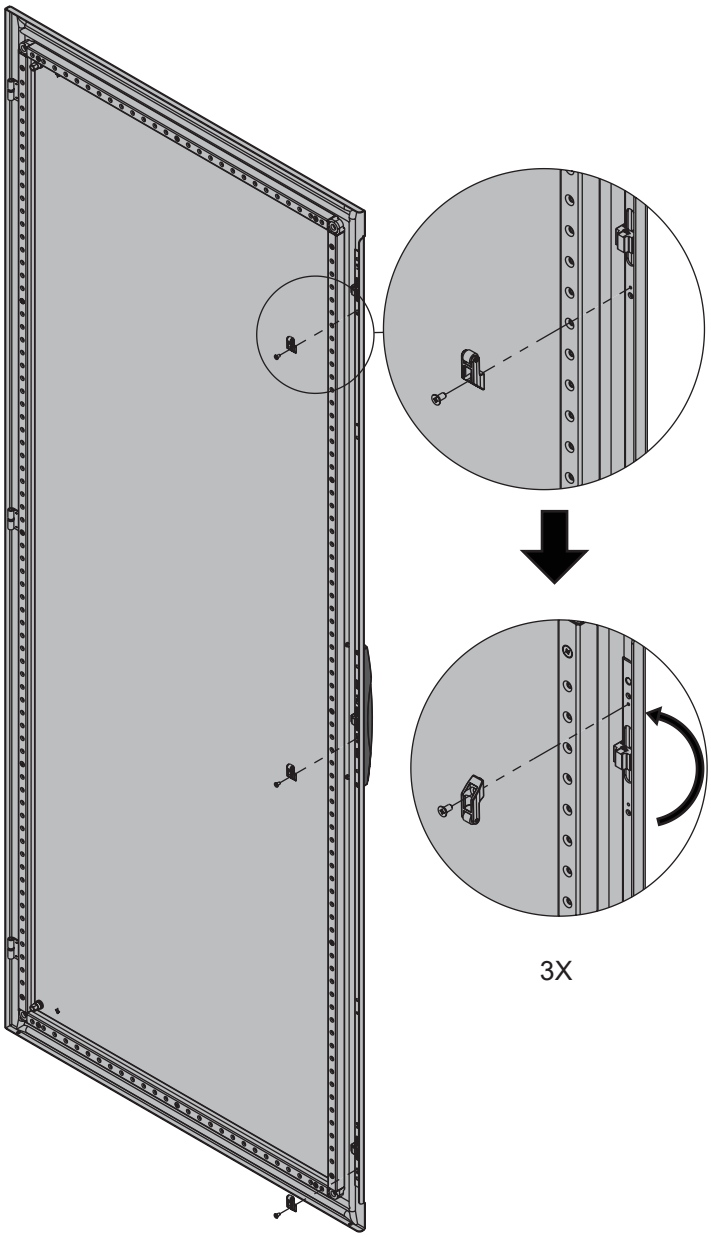

4

© 2018 Hoffman Enclosures Inc.

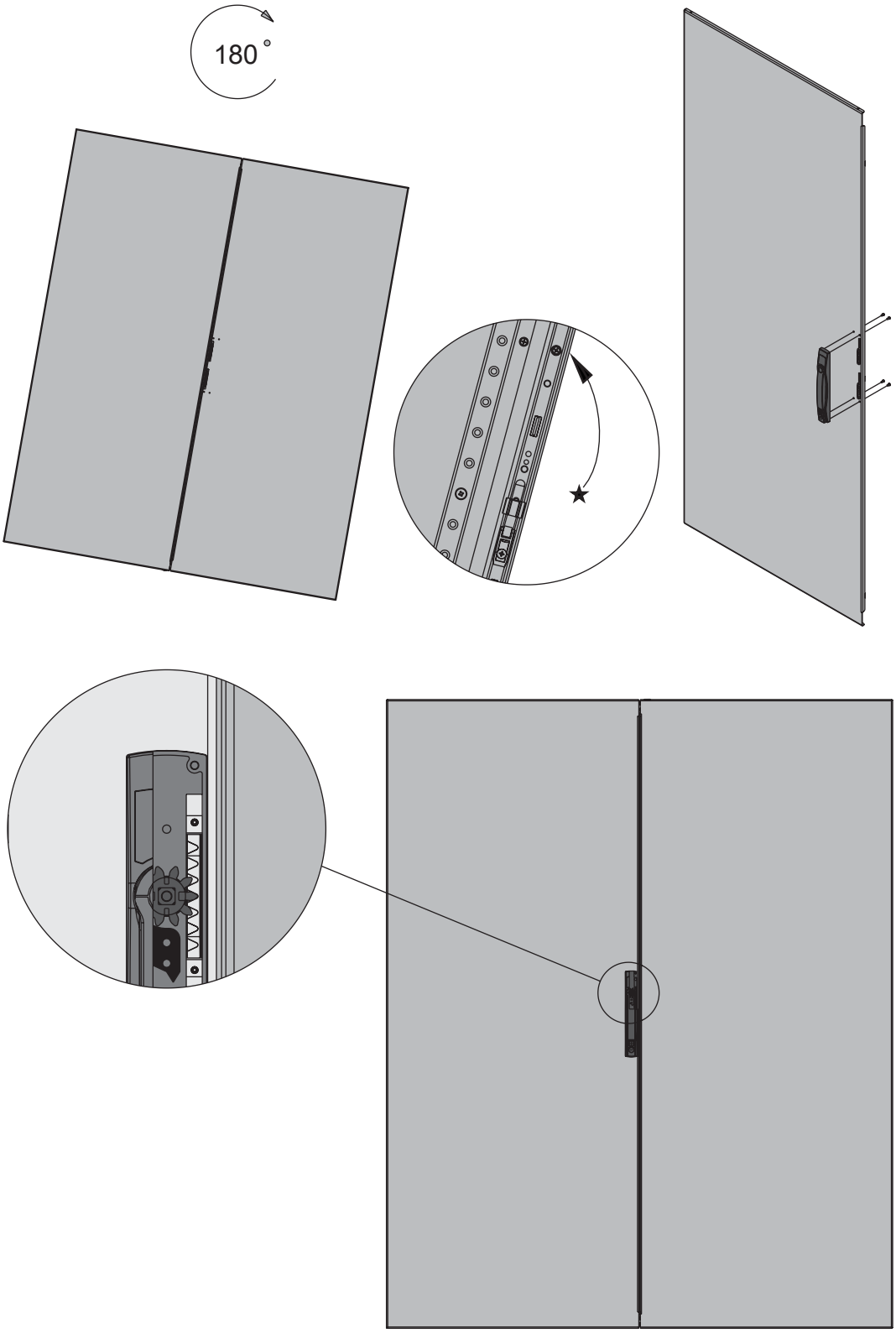

5

© 2018 Hoffman Enclosures Inc.

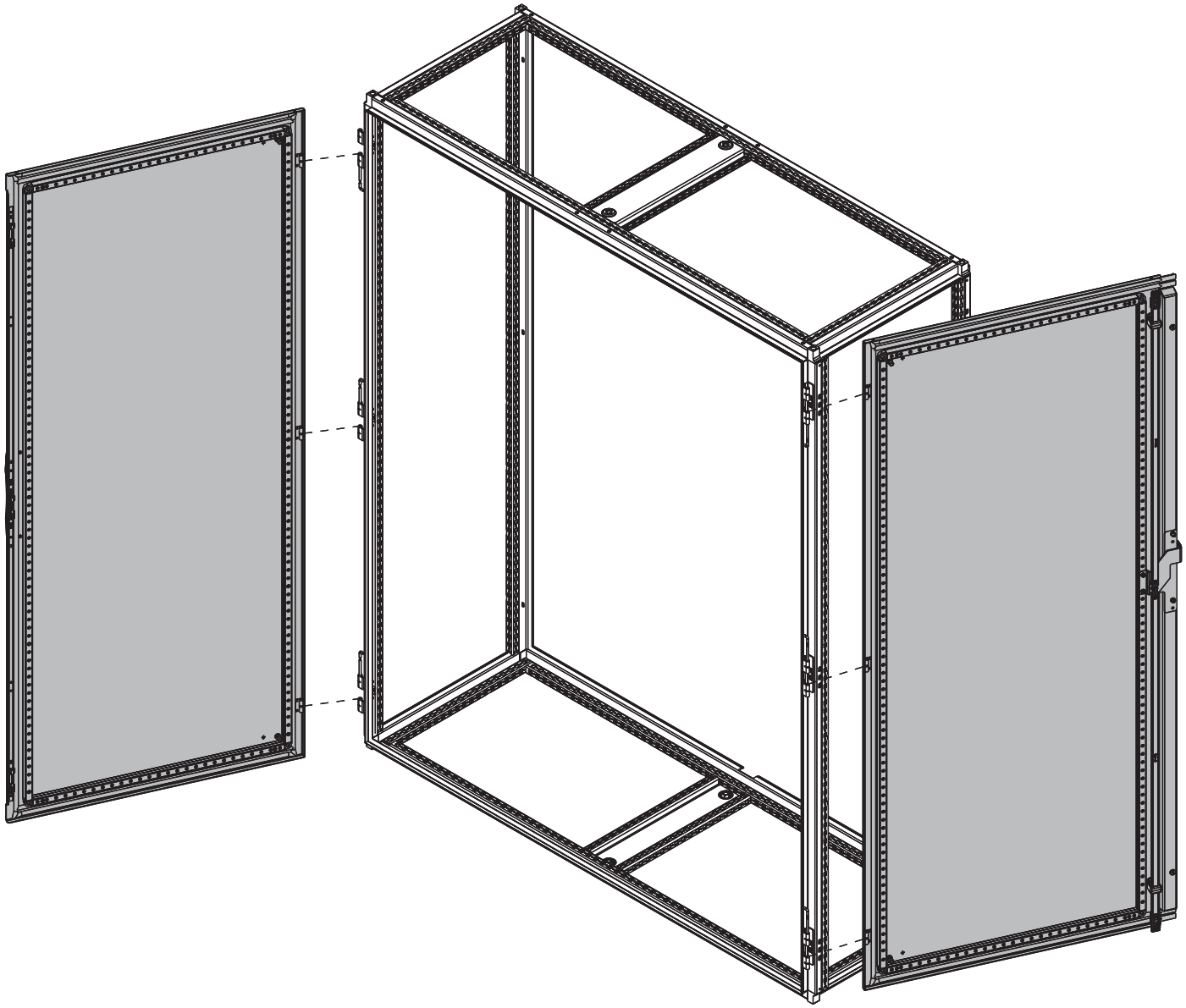

6

© 2018 Hoffman Enclosures Inc.

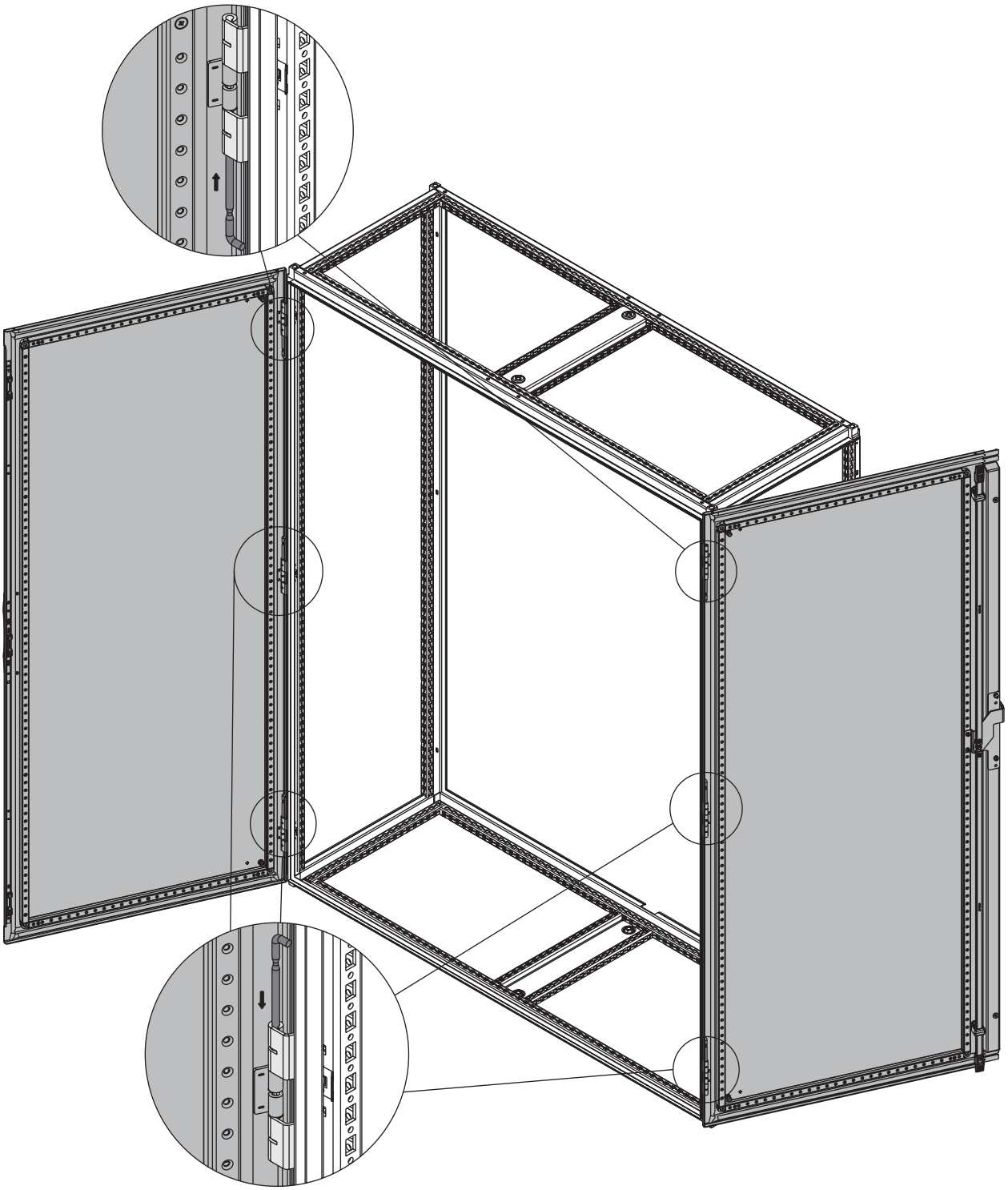

7

© 2018 Hoffman Enclosures Inc.

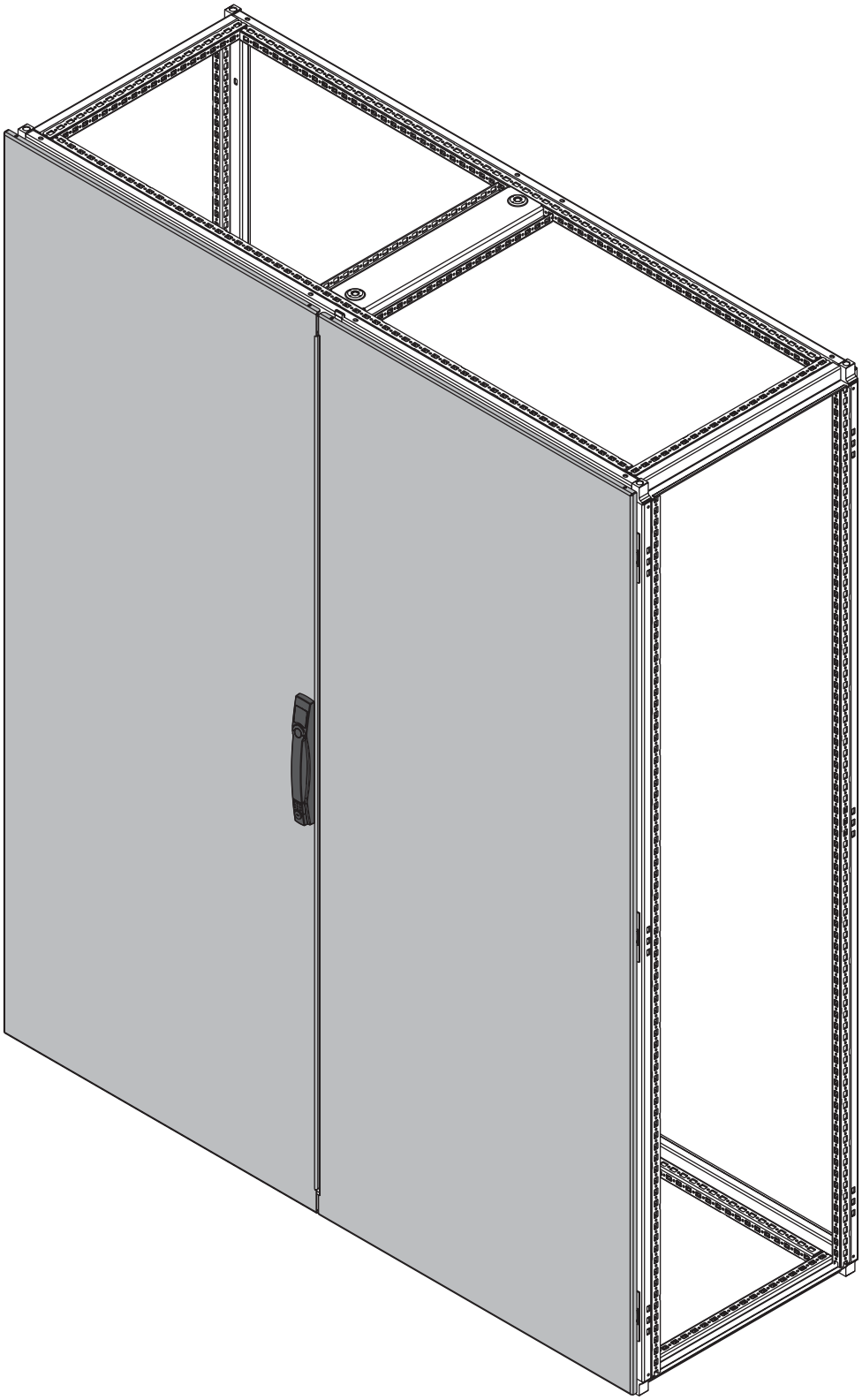

8

© 2018 Hoffman Enclosures Inc.

© 2018 Hoffman Enclosures Inc.