Drip Shield

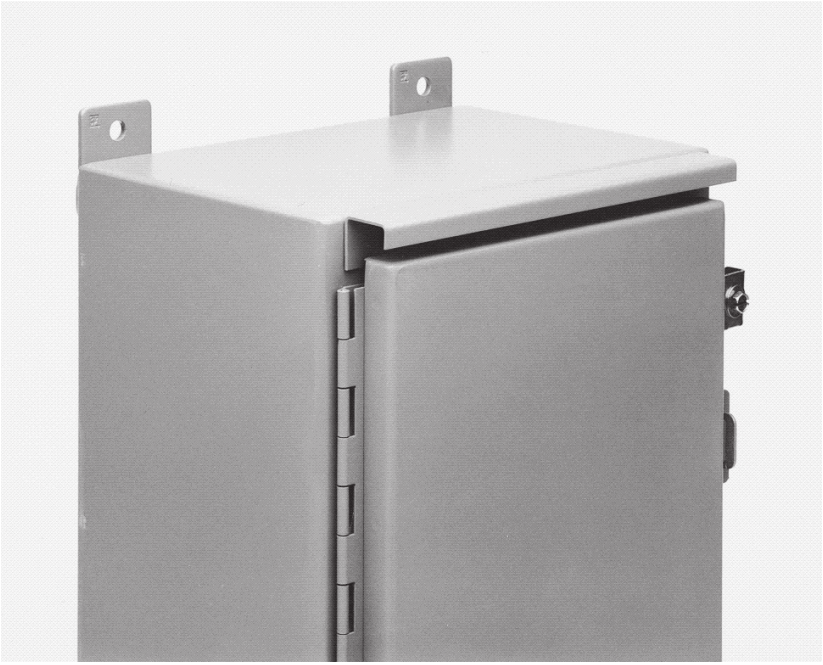

© 2018 Hoffman Enclosures Inc.
PH 763 422 2211 • nVent.com/HOFFMAN
P/N 99401538 87568958

Install The Drip Shield

1. Center the drip shield above the door of the enclosure. Drip shield must be positioned against door opening flange as shown below.

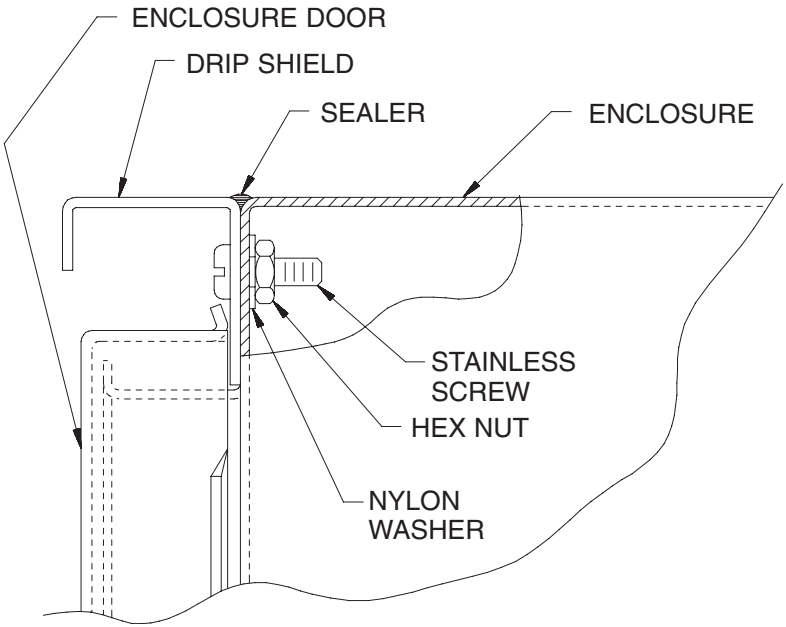

2. Use the drip shield to locate and drill one of the end holes first, using a 7/32 inch drill. Align drip shield and install a 10–32 screw through the shield and enclosure. Then drill the remaining holes using the drip shield as a guide. Install the remaining screws, nylon washers, and nuts as shown.
3. Apply sealer between drip shield and enclosure as shown.

Install The Stainless Steel Hinge Pin

1. To remove the steel hinge pin, lay the enclosure on its back and use a hammer and center punch to start the pin removal. Then clamp a locking type pliers to the end of the exposed pin, and strike the pliers with the hammer to continue pin removal.

 © 2018 Hoffman Enclosures Inc.

2. You may have to cut the new stainless steel hinge pin to obtain the proper length. Be sure the pin is the proper length before installing. Start the pointed end of the pin into the hinge loops, clamp the locking type pliers to the pin, and strike the pliers with the hammer to drive in the pin. Some of the long hinge pins are provided as two separate pins. In this case, drive in one pin from each end of the door.

Install Stainless Steel Door Clamps

(single door wall–mounted enclosures only)

1. Remove each clamp assembly, and install the stainless steel clamp assembly as shown below.

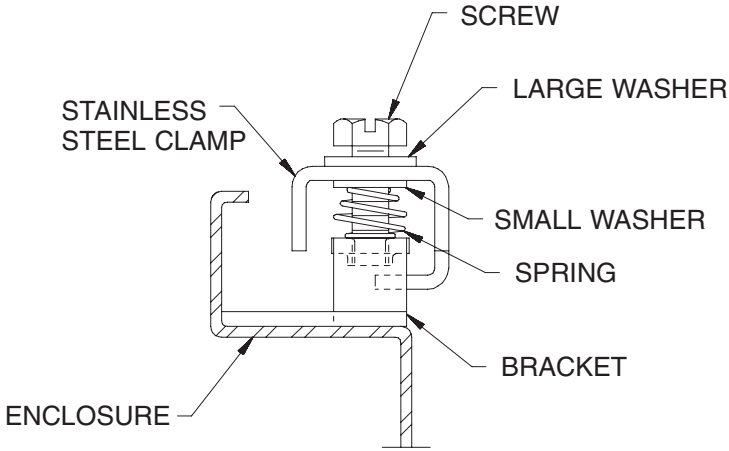

WARNING

Before any circuits are energized, all internal and external electrical and mechanical clearances must be checked to assure that all assembled and mounted equipment functions safely and properly.

This accessory maintains UL/CSA Type 12,4,4X when installed per these instructions. This accessory is covered by UL file E61997 and CSA file LR42186.

 © 2018 Hoffman Enclosures Inc.

© 2018 Hoffman Enclosures Inc.
PH 763 422 2211 • nVent.com/HOFFMAN
P/N 99401538
87568958