Vertical Cable Manager
Gestionnaire Vertical De Câble
Encargado Vertical del Cable

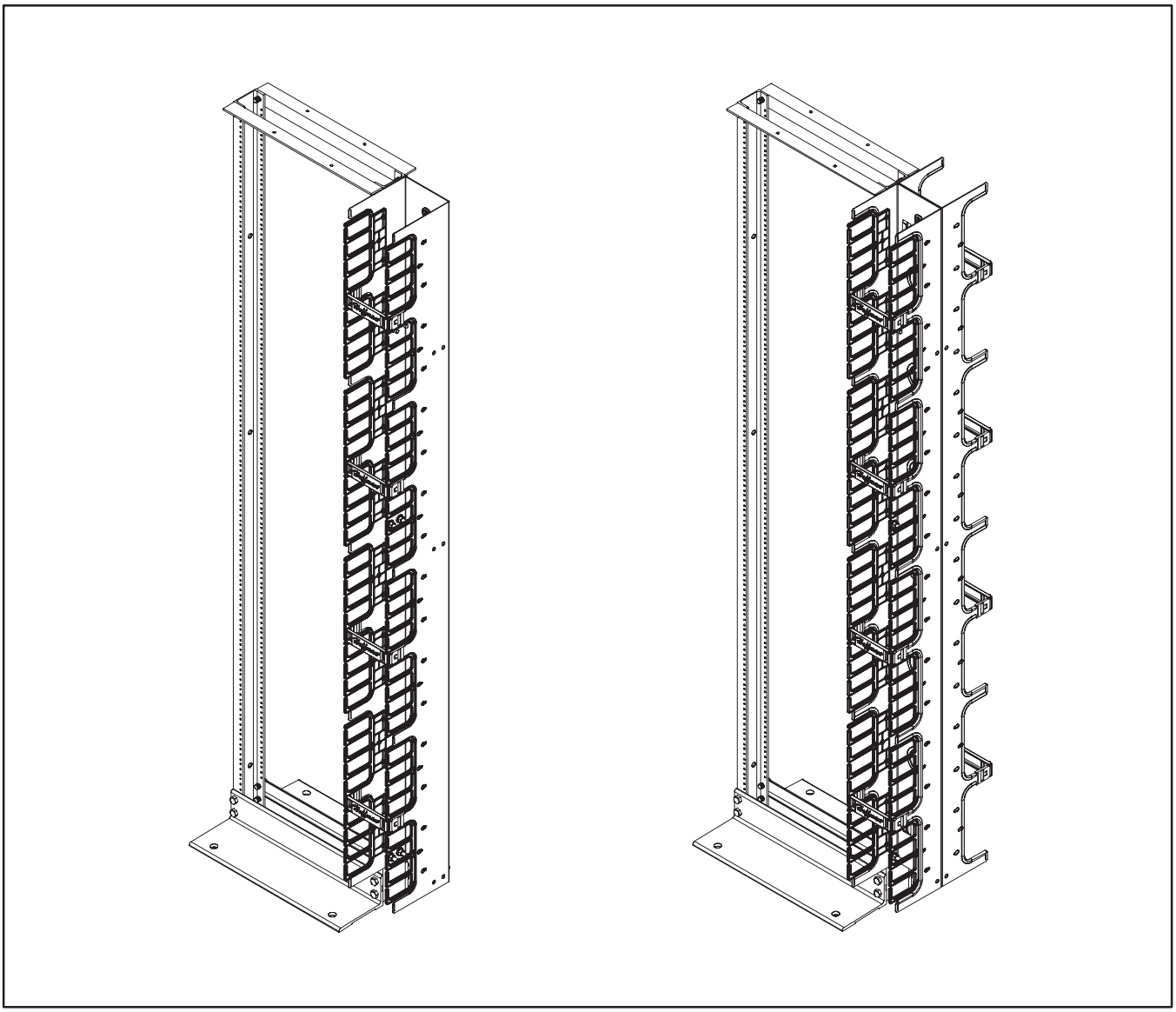

© 2018 Hoffman Enclosures Inc.
PH 763 422 2211 • nVent.com/HOFFMAN
P/N 87790357

1 3/8–16	2 3/8	3 3/8	4 3/8
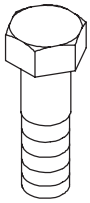 (3x) (6x)	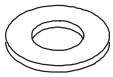 (6x) (12x)	(3x) (6x)	(3x) (6x)

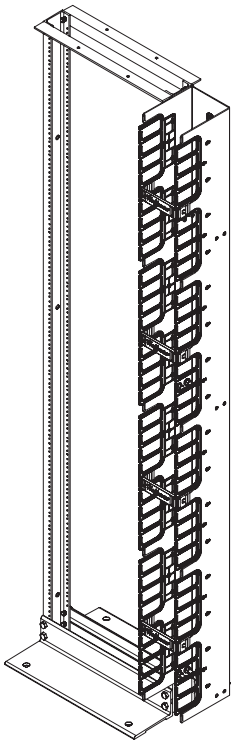

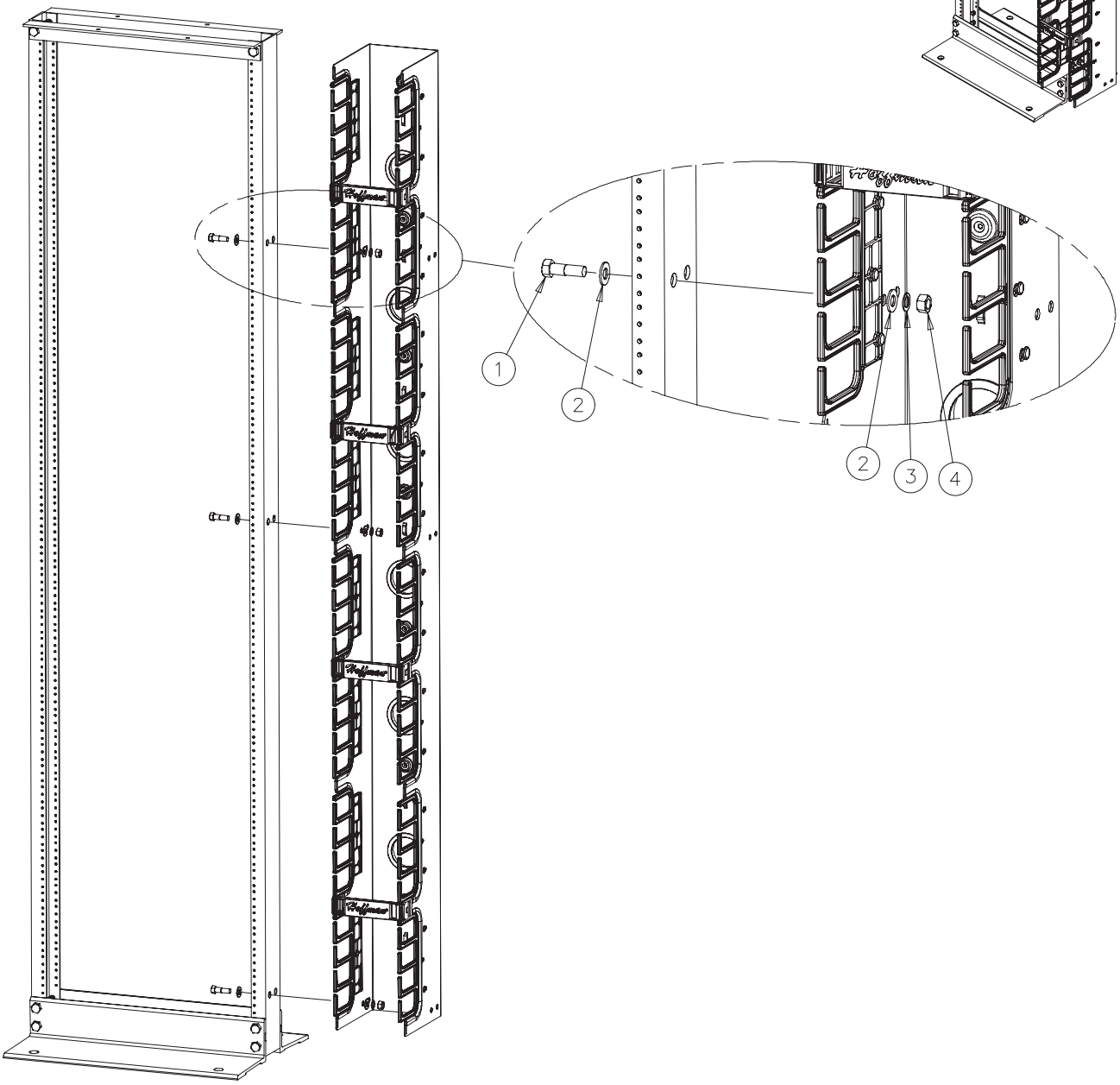

© 2018 Hoffman Enclosures Inc.

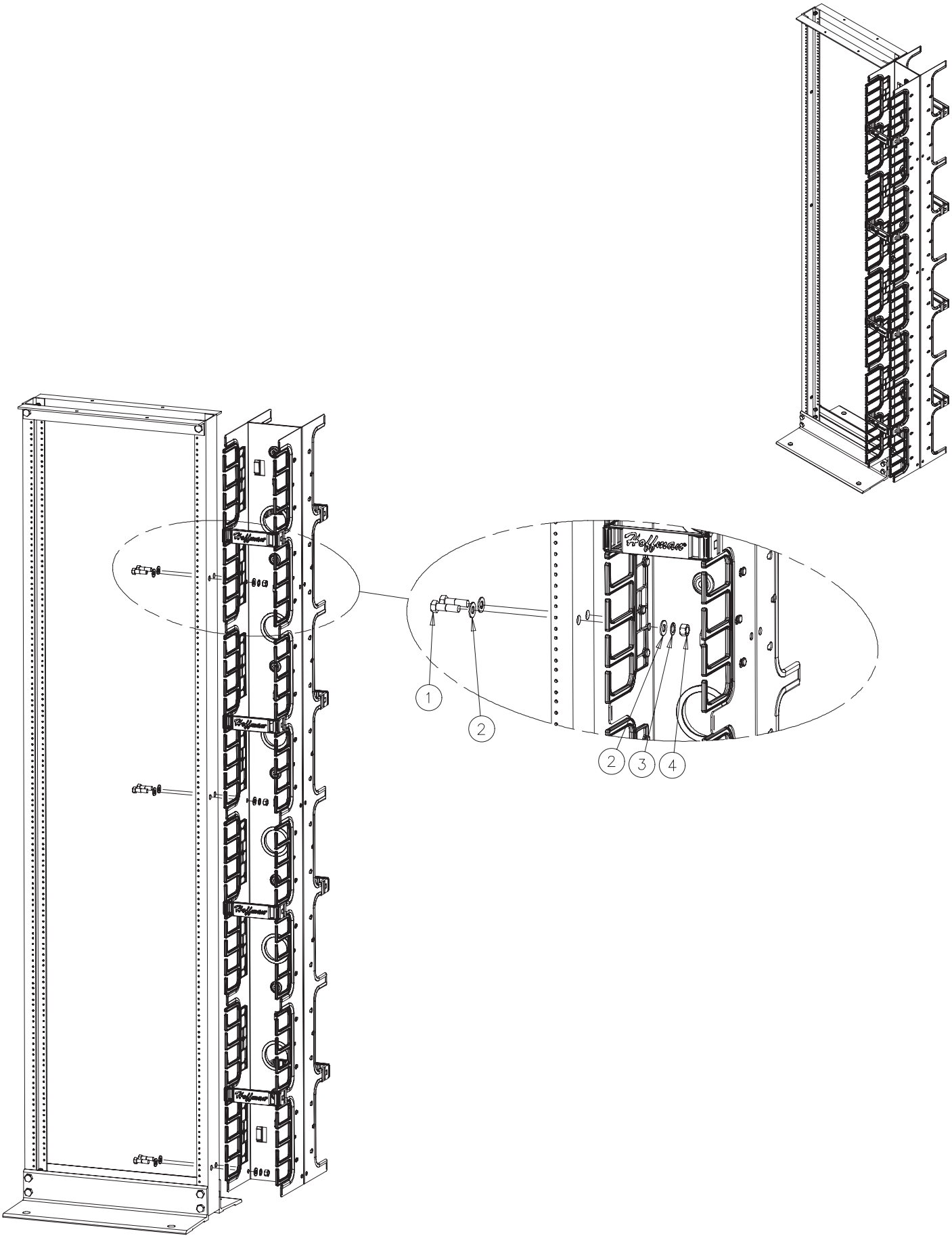

© 2018 Hoffman Enclosures Inc.

© 2018 Hoffman Enclosures Inc.