PROLINE™

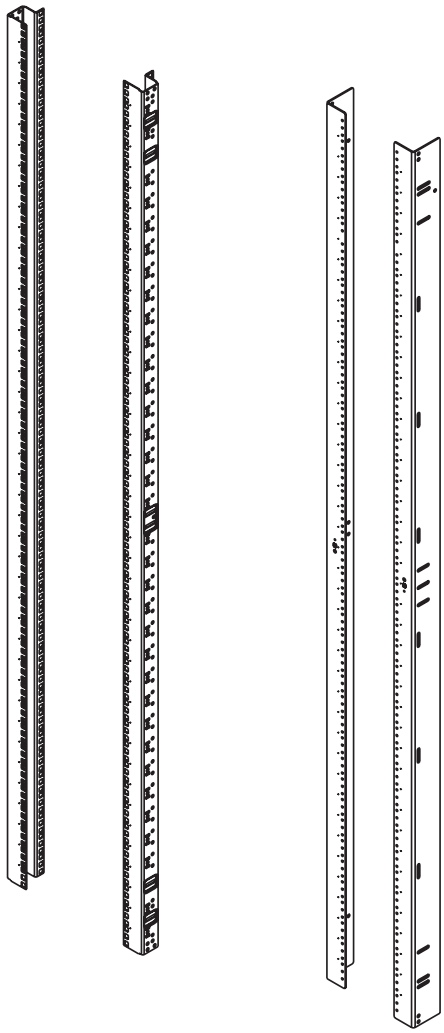

© 2018 Hoffman Enclosures Inc.

1	M6x20
	(6x)
2	M6–1
	(6x)
3	M5x10
	(6x)
4	
	(6x)
5	PRAxxxxTH PRAxxxxTP
	(2x)

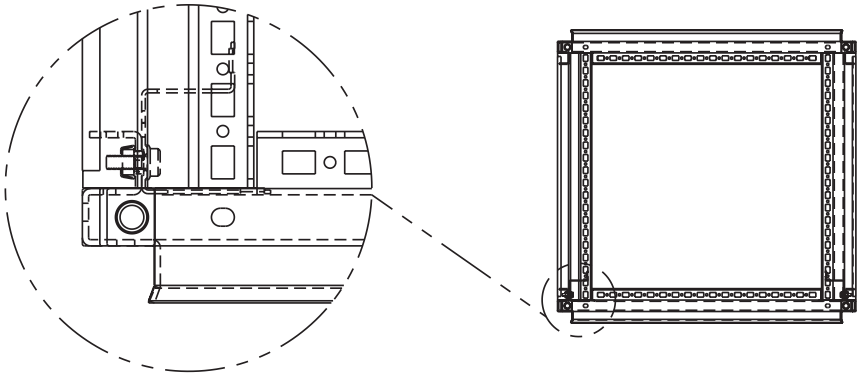

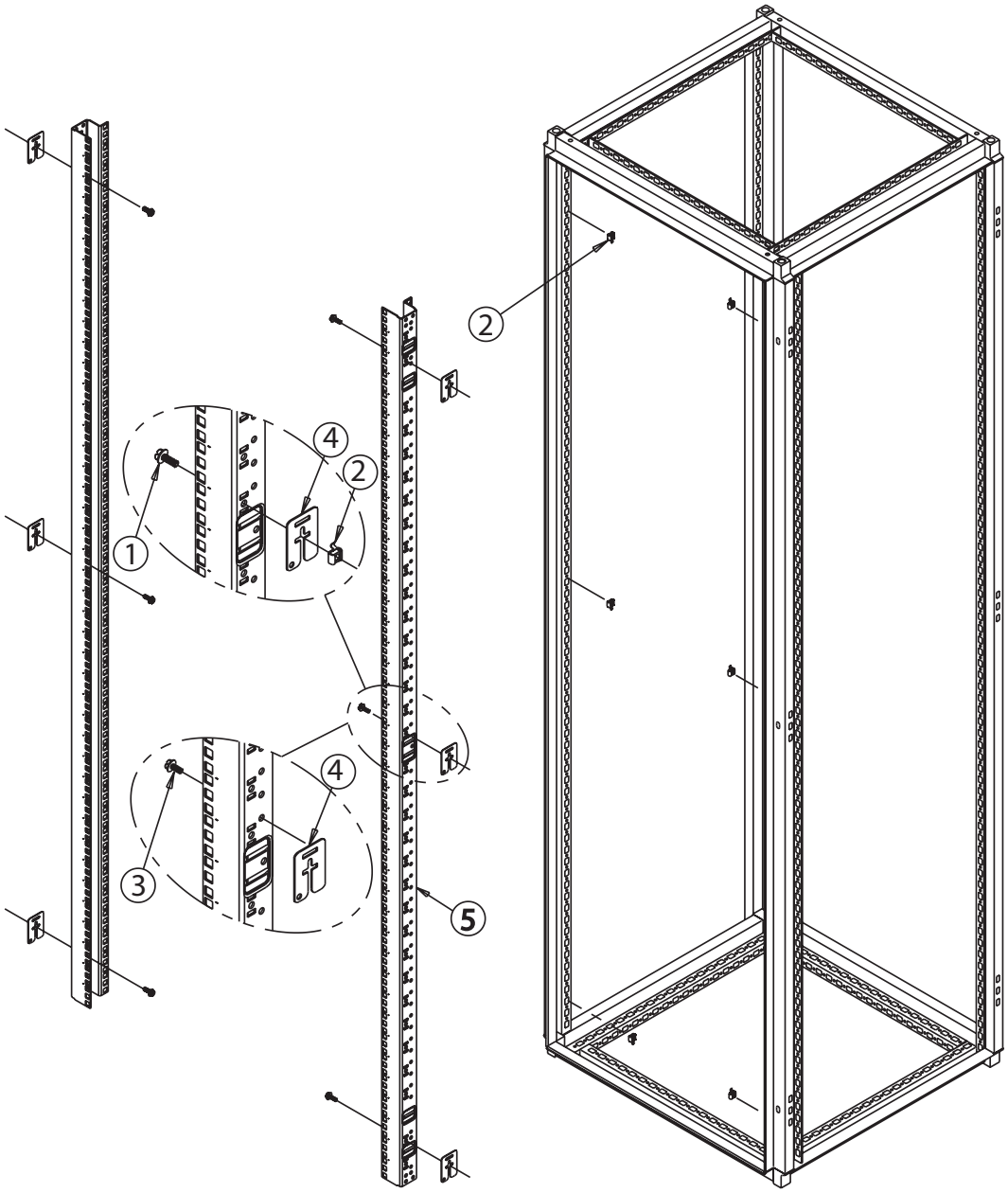

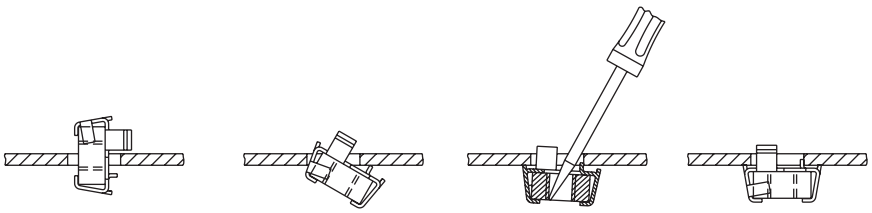

© 2018 Hoffman Enclosures Inc.

1	M6x20	(6x)
2		(6x)
3	M5x10	(6x)
4		(6x)
5	PRAxxxxTHL1 PRAxxxxTPL1	(2x)

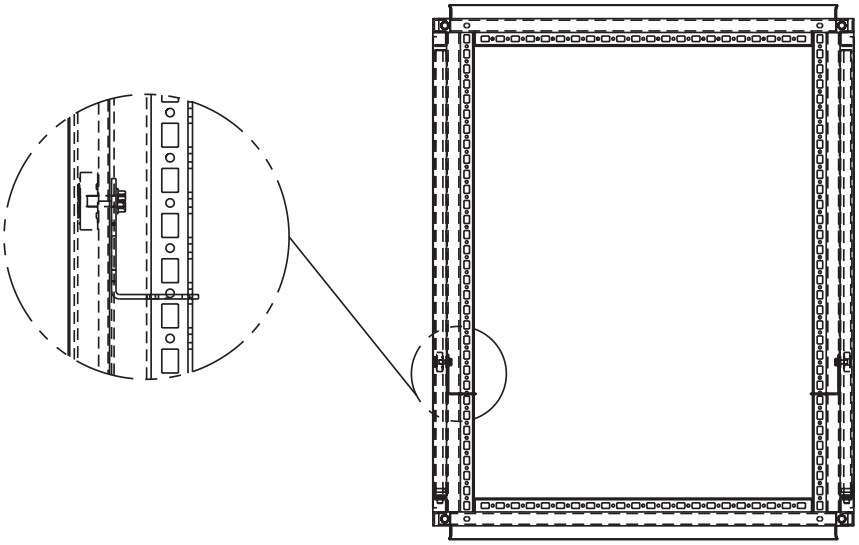

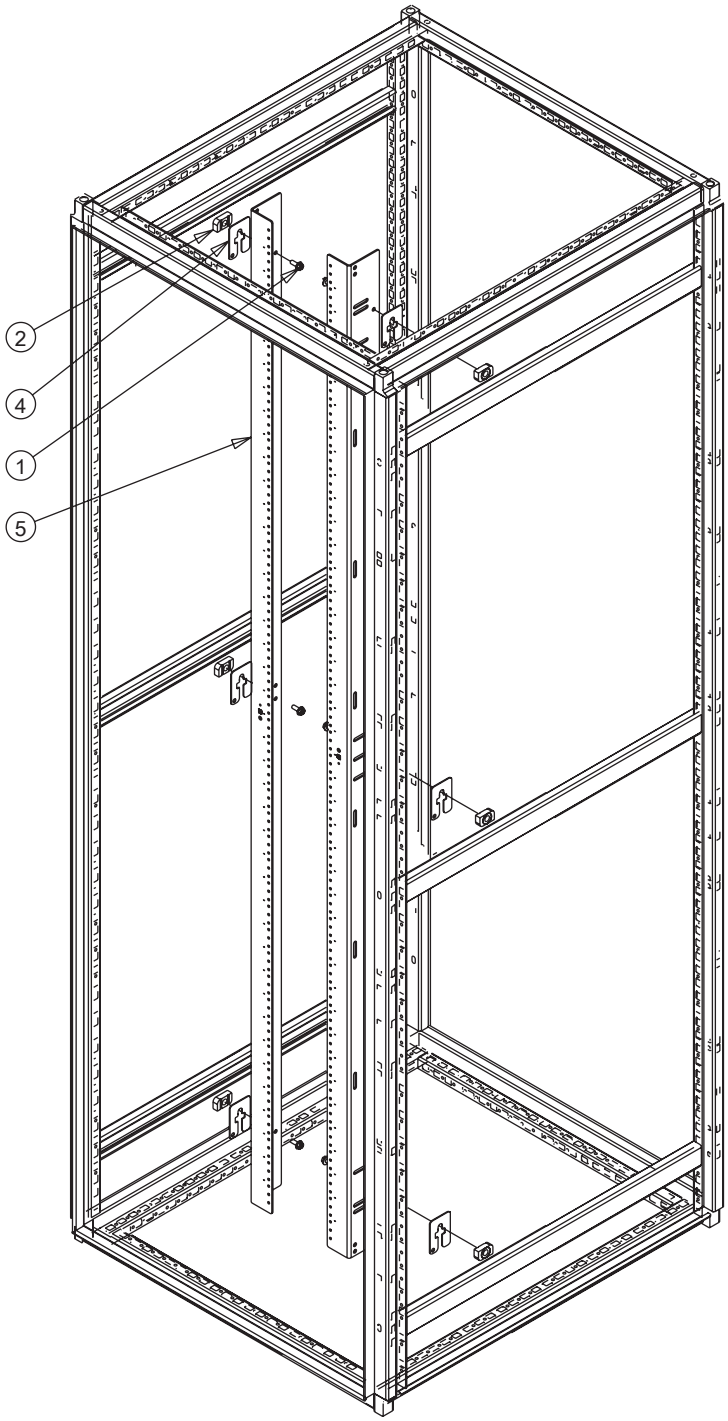

© 2018 Hoffman Enclosures Inc.

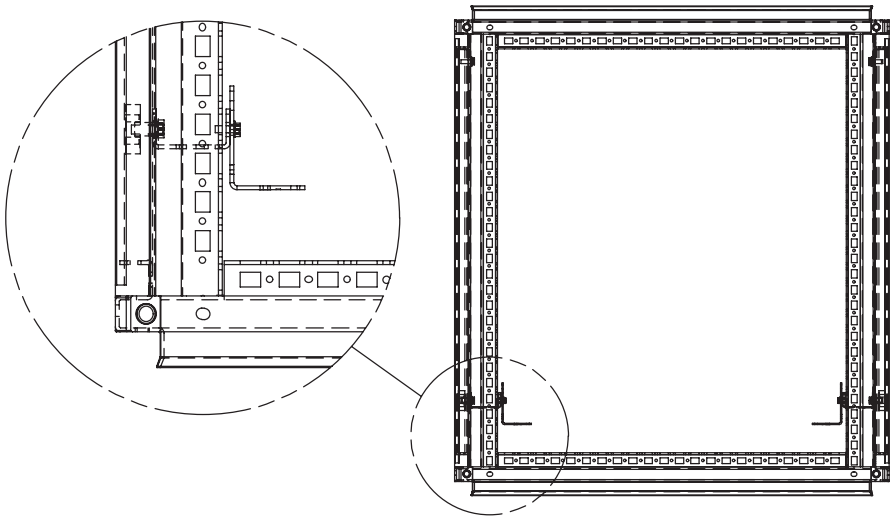

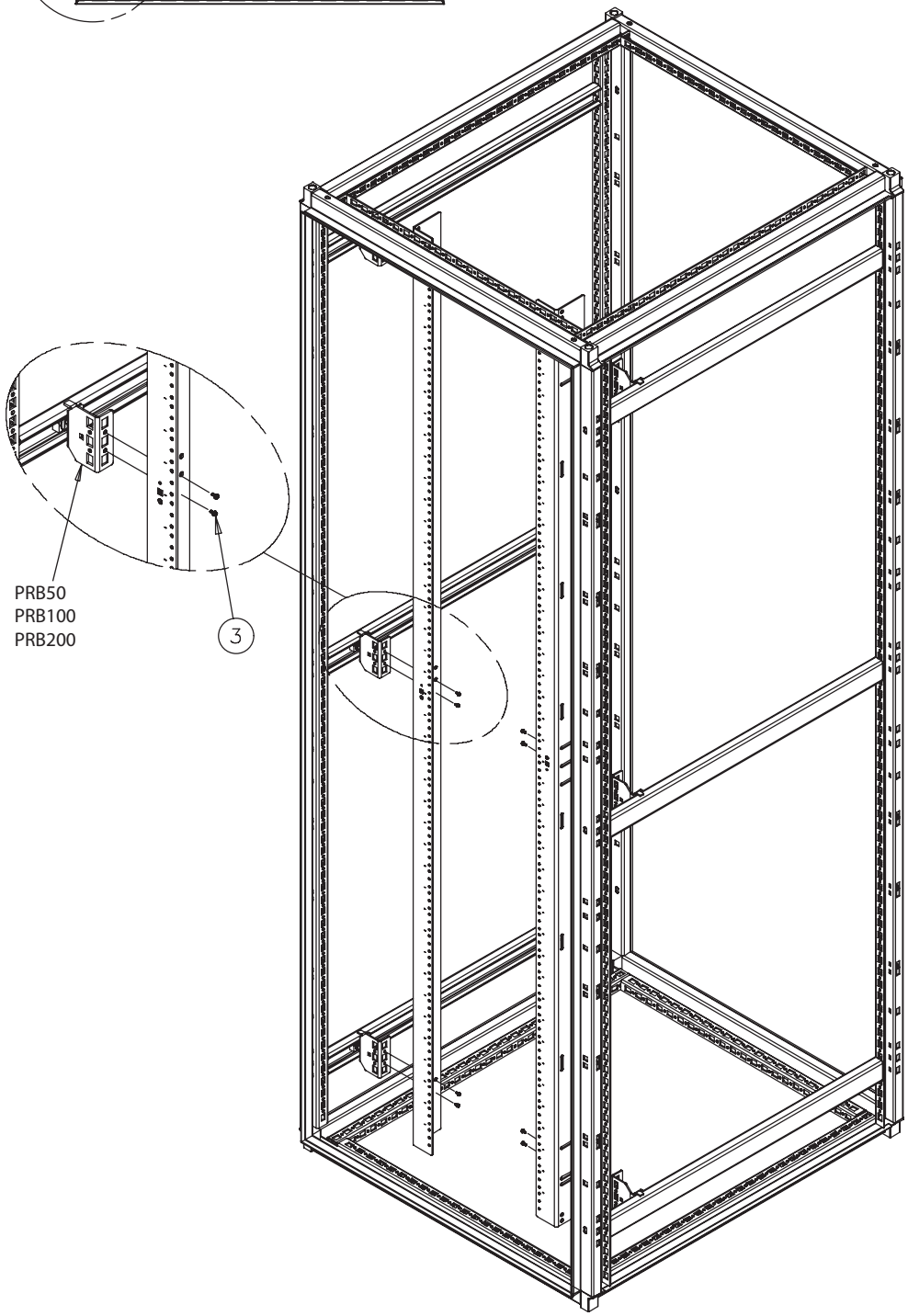

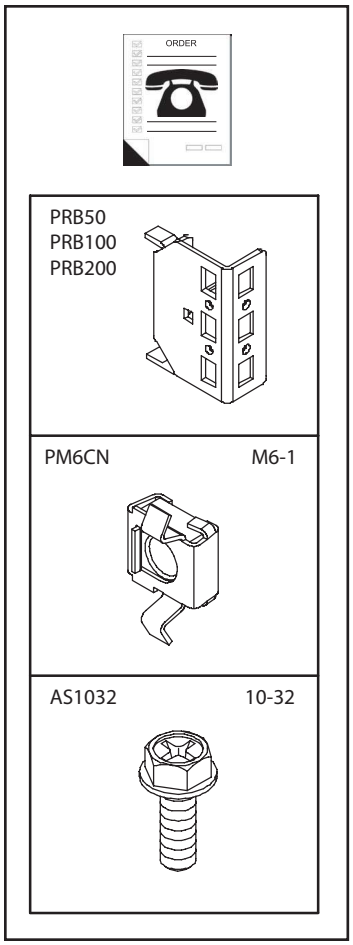

© 2018 Hoffman Enclosures Inc.