PROLINE S1 CABINET

INDUSTRY STANDARDS

UL 2416 Listed File Number E230874
cUL Listed per CSA 22.2 60950-1-07
UL 2416 Bonding and Grounding (with use of PGK grounding Kit)

EIA 310-D (RU – Rack Unit spacing, marking, and positioning)
IEC 60529, IP20
Perforated doors meet or exceed manufactures open space/air flow ventilation requirements

APPLICATION

ProLine S1 Cabinets are an economical solution for contractors, small computer rooms, schools, retail outlets, or smaller networks that require a general purpose cabinet to house servers, switches, cables and other communication equipment. Multiple sizes, configurations, and accessories give ProLine S1 Cabinets wide application flexibility.

FEATURES

- All doors have tool-less hinges that allow the doors to easily be removed or reversed in the field
- All doors have ergonomic opening, keylocking handles
- Easy-to-remove side panels with keylocking latch
- Front and rear doors are fully perforated to allow for maximum air flow
- Top accepts additional cooling fans (2 X 6-in. fans) with integral finger guard prefabricated in place
- Top has sliding gland plate to accommodate large cable egress capacity
- Combination foot and adjustable leveler in each cabinet corner
- Two sets of L-Shaped, heavy gauge Rack Angles with rack unit markings are furnished – tapped holes (10-32) on one side and square holes (.375 in. x .375 in.) on the other side
- Rack angles are fully adjustable front to rear and easily converted to either the tapped or square hole configuration; use square holes for server cabinets and tapped holes for communication cabinets
- Rack angles come centered in all cabinet for 19-in. rack spacing; in 700mm and 800m wide cabinets they can be adjusted to 23-in. rack spacing, and either centered or biased to one side for use with one or two vertical cable manager accessories (23-in. can only be biased in 800mm wide cabinets)
- Open base for easy cable entrance

SPECIFICATIONS

- 12 gauge cold rolled multi-formed welded steel frame construction
- Doors made of 16 gauge steel with forms and door stiffener
- Top is made of 16 gauge steel
- Perforated material is made of steel with maximum open space
- Side panels made of 16 gauge steel with formed sides
- Rack angles made of multi-formed 12 gauge steel with tapped (10-32UNF) and square holes per Industry Standards
- Bonding and grounding (earthing) studs on all doors, sides and tops
- Leveler is made of 12mm threaded steel, adjusting nut and composite foot
- Keylocking handle made of composite material – common key on all doors

FINISH

Pretreated steel coated with RAL 9005 black textured low-gloss polyester powder paint. Other finishes available; contact Hoffman Customer Service for details. Rack angles and top/bottom brackets are painted flat, low-gloss, smooth RAL 9005 black with RU markings front and rear per Industry Standards.

LOAD RATING

Static (cabinet positioned in place and loaded with equipment) per UL 2416 test: 3000 lbs.

DYNAMIC RATING*

Caster: Light Duty - 900 lbs.; Heavy Duty - 3000 lbs.

* Dynamic caster load rating is based on short distances over flat solid surfaces on even floors at walking speeds. Great care must be given when moving any cabinet at any load; contact nVent HOFFMAN for additional guidelines.

Dynamic Ship Rating: 1000 lbs. per ASTM D4169-14 (Distribution Testing) and ASTM D4728 (Vibration Testing).

BULLETIN: DPS1

Standard Product **Perforated Door**

Catalog Number	AxBxC in./mm	Cabinet Type	Rack Mount Spacing	Rack Units	Front Door Perforated Opening M x N in./mm	Rack Angle Catalog Number
PS1C1269B	47.74 x 23.87 x 35.36 1213 x 606 x 898	Communication	19-in.	24	36.04 x 14.49 916 x 368	PS1RA126
PS1C1278B	47.74 x 27.87 x 31.43 1213 x 708 x 798	Communication	19- or 23-in.	24	36.04 x 18.43 916 x 468	PS1RA127
PS1C2178B	85.14 x 27.87 x 31.43 2163 x 708 x 798	Communication	19- or 23-in.	45	73.46 x 18.43 1866 x 468	PS1RA217
PS1C2179B	85.14 x 27.87 x 35.36 2163 x 708 x 898	Communication	19- or 23-in.	45	73.46 x 18.43 1866 x 468	PS1RA217
PS1C21710B	85.14 x 27.87 x 39.30 2163 x 708 x 998	Communication	19- or 23-in.	45	73.46 x 18.43 1866 x 468	PS1RA217
PS1C21711B	85.16 x 27.77 x 43.23 2163 x 708 x 1098	Communication	19- or 23-in.	45	73.46 x 18.43 1866 x 468	PS1RA217
PS1C21712B	85.16 x 27.87 x 47.17 2163 x 708 x 1198	Communication	19- or 23-in.	45	73.46 x 18.43 1866 x 468	PS1RA217
PS1C2188B	85.14 x 31.81 x 31.43 2163 x 808 x 798	Communication	19- or 23-in.	45	73.46 x 22.36 1866 x 568	PS1RA218
PS1C2189B	85.14 x 31.81 x 35.36 2163 x 808 x 898	Communication	19- or 23-in.	45	73.46 x 22.36 1866 x 568	PS1RA218
PS1C21810B	85.14 x 31.81 x 39.30 2163 x 808 x 998	Communication	19- or 23-in.	45	73.46 x 22.36 1866 x 568	PS1RA218
PS1C21811B	85.16 x 31.81 x 43.23 2163 x 808 x 1098	Communication	19- or 23-in.	45	73.46 x 22.36 1866 x 568	PS1RA218
PS1C21812B	85.16 x 31.81 x 47.17 2163 x 808 x 1198	Communication	19- or 23-in.	45	73.46 x 22.36 1866 x 568	PS1RA218
PS1C23712B	91.06 x 27.87 x 47.17 2313 x 708 x 1198	Communication	19- or 23-in.	48	79.37 x 18.43 2016 x 468	PS1RA237
PS1C23812B	91.06 x 31.81 x 47.17 2313 x 808 x 1198	Communication	19- or 23-in.	48	79.37 x 22.36 2016 x 568	PS1RA238
PS1S2169B	85.14 x 23.87 x 35.36 2163 x 606 x 898	Server	19-in.	45	73.46 x 14.49 1866 x 368	PS1RA216
PS1S21610B	85.14 x 23.87 x 39.30 2163 x 606 x 998	Server	19-in.	45	73.46 x 14.49 1866 x 368	PS1RA216
PS1S21611B	85.14 x 23.87 x 43.24 2163 x 606 x 1098	Server	19-in.	45	73.46 x 14.49 1866 x 368	PS1RA216
PS1S21612B	85.14 x 23.87 x 47.18 2163 x 606 x 1198	Server	19-in.	45	73.46 x 14.49 1866 x 368	PS1RA216
PS1S23612B	91.06 x 23.86 x 47.17 2313 x 606 x 1198	Server	19-in.	48	79.37 x 14.49 2016 x 368	PS1RA236

Standard Product **Window Door**

Catalog Number	AxBxC in./mm	Cabinet Type	Rack Mount Spacing	Rack Units	Front Door Perforated Opening M x N in./mm	Rack Angle Catalog Number
PS1SW21611B	85.16 x 23.86 x 43.23 2163 x 606 x 1098	Server	19-in.	45	77.05 x 17.13 1957 x 435	PS1RA216
PS1SW21612B	85.16 x 23.86 x 47.17 2163 x 606 x 1198	Server	19-in.	45	77.05 x 17.13 1957 x 435	PS1RA216
PS1CW2178B	85.16 x 27.87 x 31.42 2163 x 708 x 798	Communication	19-in. or 23-in.	45	77.05 x 21.07 1957 x 535	PS1RA217
PS1CW21710B	85.16 x 27.87 x 39.29 2163 x 708 x 998	Communication	19-in. or 23-in.	45	77.05 x 21.07 1957 x 535	PS1RA217
PS1CW2189B	85.16 x 31.81 x 35.35 2163 x 808 x 898	Communication	19-in. or 23-in.	45	77.05 x 25.00 1957 x 635	PS1RA218

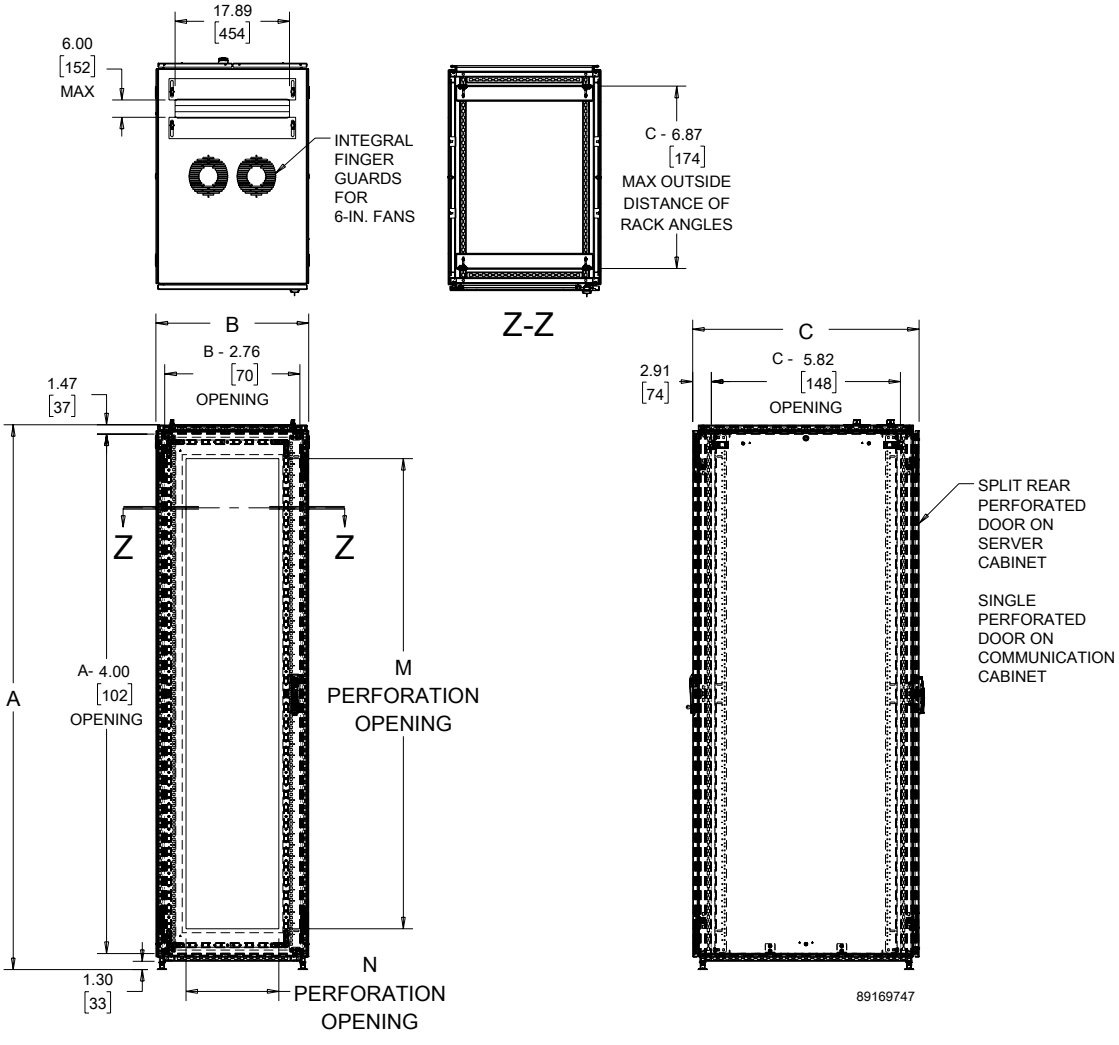
17.89
[454]
6.00
[152]
MAX
INTEGRAL
FINGER
GUARDS
FOR
6-IN. FANS
C - 6.87
[174]
MAX OUTSIDE
DISTANCE OF
RACK ANGLES
Z-Z
B
B - 2.76
[70]
OPENING
1.47
[37]
Z
Z
A
A- 4.00
[102]
OPENING
M
PERFORATION
OPENING
N
PERFORATION
OPENING
1.30
[33]
C
C - 5.82
[148]
OPENING
2.91
[74]
SPLIT REAR
PERFORATED
DOOR ON
SERVER
CABINET
SINGLE
PERFORATED
DOOR ON
COMMUNICATION
CABINET
89169747

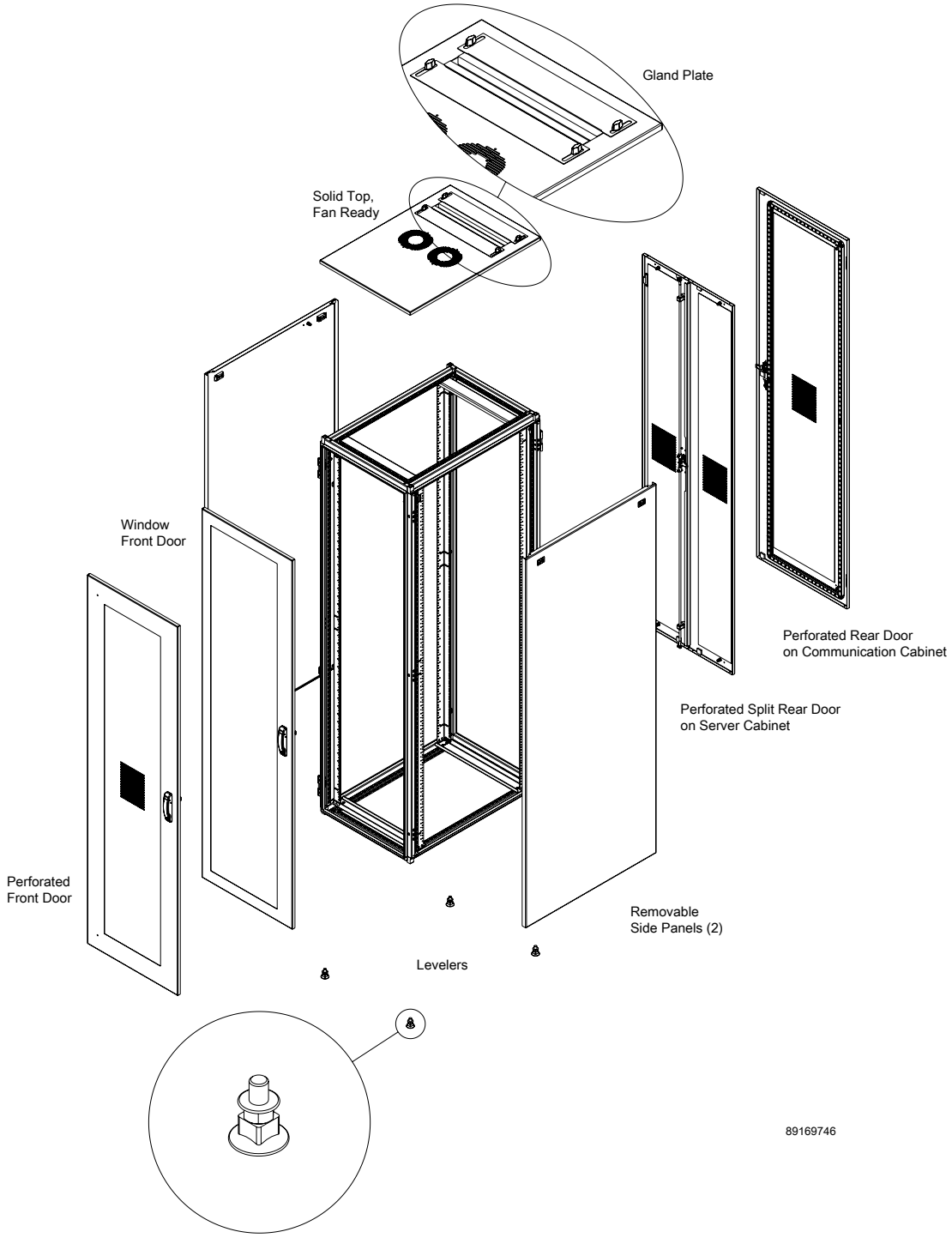
Gland Plate
Solid Top,
Fan Ready
Window
Front Door
Perforated Rear Door
on Communication Cabinet
Perforated Split Rear Door
on Server Cabinet
Perforated
Front Door
Removable
Side Panels (2)
Levelers
89169746

PROLINE S1 CASTER AND LEVELER KITS

Caster/Leveler kits are available in either a light duty (900 lbs.) or heavy duty (3000 lbs.) load rating. The kits are comprised of a set of four caster/levelers and all assembly hardware. Each caster is easily assembled to the cabinet and swivels to allow ease of cabinet movement. The casters are made of black composite material. The levelers are easily adjusted down and secured with furnished locking nuts. These Caster/Leveler kits are designed for moving a cabinet within a facility to its final location.

NOTE: Casters are for moving the cabinet short distances within the building interior space. They are not intended for transportation or shipping. When transporting the cabinet by carrier, the shipping pallet must extend to the frame of the cabinet and at no time should the caster support any load during the shipping process. Casters must have smooth, flat, hard surfaces to move upon. Floors with cracks, seams, debris, inclines, and declines are to be avoided. Great care must always be observed when moving cabinets to avoid tipping. Casters are not designed for exterior surfaces, asphalt, gravel, and other soft surfaces. Contact nVent HOFFMAN for additional details.

BULLETIN: DPS1

Standard Product

Catalog Number	Load Rating	Finish	Fits
PS1CLKLD	900 lbs.	Black with clear zinc plated fasteners	All cabinets
PS1CLKHD	3000 lbs.	Black with clear zinc plated fasteners	All cabinets

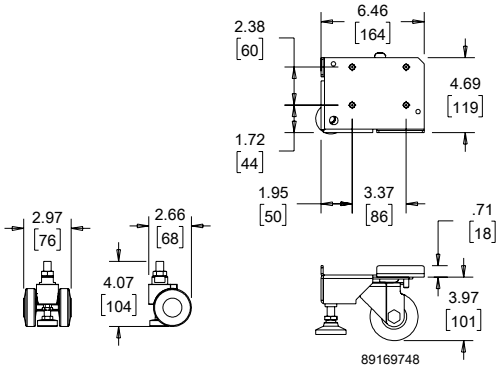

PS1CLKLD PS1CLKHD

CASTER KIT

A set of four casters (two locking, two non-locking) that mount directly to the bottom of a ProLine frame, 0-mm or 100-mm Solid Base or a Console. **(Do not use on plinth bases.)** Casters elevate the enclosure 110 mm (4.33) when installed. Caster frames are plated steel with ball-bearing pivots. Caster wheels are made of a black polyamide material. Kit includes M12 mounting hardware.

Casters Maximum Load: 1000 lb. (453 kg)

NOTE: Casters are designed for moving the cabinet short distances within the building interior space. They are not intended for transportation or shipping. When transporting the cabinet by carrier, the shipping pallet must extend to the frame of the cabinet and at no time should the caster support any load during the shipping process. Casters must have smooth, flat, hard surfaces to move upon. Floors with cracks, seams, debris, inclines, and declines are to be avoided. Great care must always be observed when moving cabinets to avoid tipping. Casters are not designed for exterior surfaces, asphalt, gravel, and other soft surfaces. Contact nVent HOFFMAN for additional details.

BULLETIN: P20

Catalog Number	Description
PC1M12	Set of 4 Casters

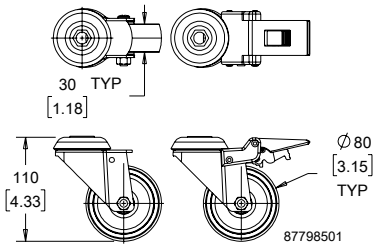

PROLINE S1 VERTICAL CABLE MANAGERS

Vertical Cable Managers are sold individually and attach to the cabinet rack angles. They provide a vertical open column for cables. Arrowhead fingers every 1.75 in. match rack unit spaces and allow for managing and protecting cables and ensuring proper bend radius. These cable managers are made of steel, painted RAL 9005 black, low-gloss polyester powder textured. The engineered composite arrowhead supporting fingers are black.

BULLETIN: DPS1

Standard Product

Catalog Number	H in./mm	W in./mm	Vertical Cross Section H x W in./mm	Vertical Cross Section Area sq. in.	Qty. 0.20-in. Dia. Cables at 70% Fill	Qty. 0.25-in. Dia. Cables at 75% Fill
PS1CM127	41.63 1057	2.33 59	1.76 x 8.18 44.6 x 207.7	14.40 9263	343	220
PS1CM217	79.03 2007	2.33 59	1.76 x 8.18 44.6 x 207.7	14.40 9263	343	220
PS1CM218	79.03 2007	4.30 109	3.72 x 8.18 94.6 x 207.7	30.43 19648	726	464
PS1CM237	81.97 2082	2.33 59	1.76 x 8.18 44.6 x 207.7	14.40 9263	343	220
PS1CM238	81.97 2082	4.30 109	3.72 x 8.18 94.6 x 207.7	30.43 19648	726	464

Vertical Cable Manager Selection Guide

Cabinet Size Nominal A x B (Height x Width)	19-in. Rack Angle, Centered	19-in. Rack Angle, Biased Left or Right	23-in. Rack Angle, Centered	23-in. Rack Angle, Biased Left or Right
1200 x 700	PS1CM127 (1 or 2)*	PS1CM127**	N/A	N/A
2150 x 700	PS1CM217 (1 or 2)*	PS1CM217**	N/A	N/A
2150 x 800	PS1CM218 (1 or 2)*	PS1CM218**	PS1CM217*	PS1CM218**
2300 x 700	PS1CM237 (1 or 2)*	PS1CM237**	N/A	N/A
2300 x 800	PS1CM238 (1 or 2)*	PS1CM238**	PS1CM237*	PS1CM238**

* Can be installed on right side, left side, or both sides. Order one for each location.

** Install one cable manager to open opposite side of bias.

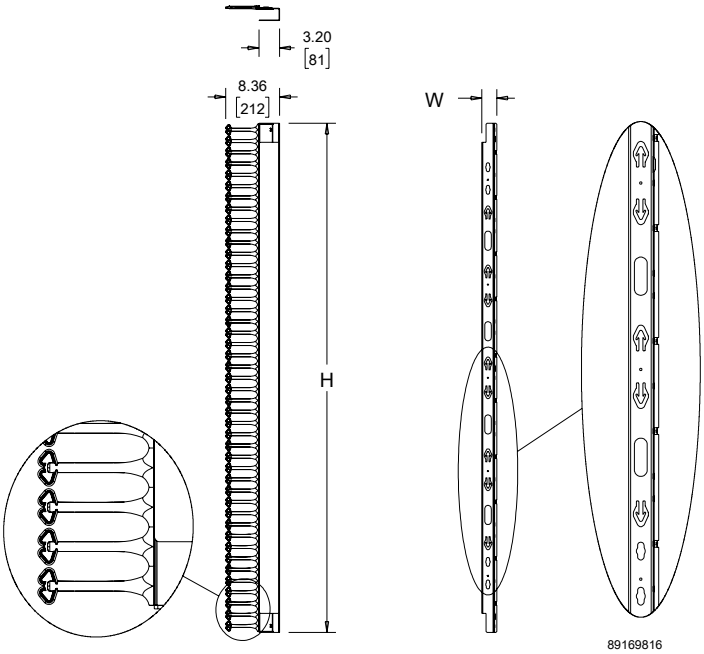

COMBINATION LOCK HANDLE

Combination Lock Handle fits cabinet doors. The swing handle, 3-digit combination lock with master key override can easily be changed. Install using existing cam from standard handle.

BULLETIN: DCY

Catalog Number	Description	Use With
NCLH	Pull-out swing handle with combination lock and master key override	All ProLine S1 full doors

PROLINE S1 ALTERNATE TUMBLER LOCKING HANDLE

The ProLine S1 Alternate Locking Handle fits ProLine S1 cabinet doors, providing cabinet security for the components inside. The alternate key-lock is a different key than the standard, allowing for varying levels of cabinet access. The alternate 333 tumbler allows for the different levels of cabinet access or multiple clients within the same facility. Comes in single or 3-point latch options.

BULLETIN: DPY

Catalog Number	Description	Material	Color	Color Code
PKLH3	Locking Handle, 6.38x1.32x1.12, Plastic, 333 Key, 1-pt	Polyamide	Jet Black	RAL 9005
PKLHSD3	Locking Handle, 6.38x1.32x1.16, Plastic, 333 Key, 3-pt	Polyamide	Jet Black	RAL 9005

SIDE COVER LOCK

Fits in pre-punched hole to secure DataCom solid side from unauthorized entry.

BULLETIN: DPC

Catalog Number	Description	Key Code
PSCLO	Side Cover Lock	2233
PSCLO3	S1 Quarter-Turn, 3-Digit Lock	333

6-INCH COMPACT AXIAL FANS

Compact Cooling Fans are ideal for applications where enclosure space is limited and quiet, reliable cooling is required. Engineered for 50,000 hours of continuous operation without lubrication or service.

BULLETIN: D85

Standard Product and Cutout Dimensions

Catalog Number	Nominal Size	Voltage
A6AXFNGQ	6	115 VAC
A6AXFNPG	6	115 VAC

FAN FILTER AND FINGER GUARD KIT

Low-density filter kit for 6-in. (152-mm) fans. Can also be used as vent. Filter is removable and can be cleaned and reused. Mounting hardware included.

BULLETIN: DTHRM

Standard Product

Catalog Number	Fits
AFLTR6LD	6-in. fans

FRAME JOINING KITS

Permits joining two enclosure frames while maintaining an environmental seal.
Side-to-Side Joining Kit consists of six frame nuts and screws, as well as gasket material to maintain a dust-tight and water-tight seal between ganged frames. Can be used if rack angles are not in the front or rearmost positions or if a subpanel is not in the rearmost position.
Alternate Joining Kit consists of three standoffs, six frame nuts and screws, as well as gasket material. This kit facilitates frame joining when rack angles are in the front or rearmost position, or if a subpanel is in the rearmost position.
Front-to-Back Joining Kit permits front-to-back joining of two single-bay enclosures. This kit does not fit 1200-mm or 1600-mm wide frames.

BULLETIN: P20, P20EM

Catalog Number	Description
PJ2F	Standard Frame Joining, Side-to-Side
PJ2FD	Standard Frame Joining, Side-to-Side, Non-gasketed
PJ2FHF2	EMC Standard Frame Joining, Side-to-Side
PJ2FF	Alternate Frame Joining, Side-to-Side
PJ2FBF	Frame Joining, Front-to-Back

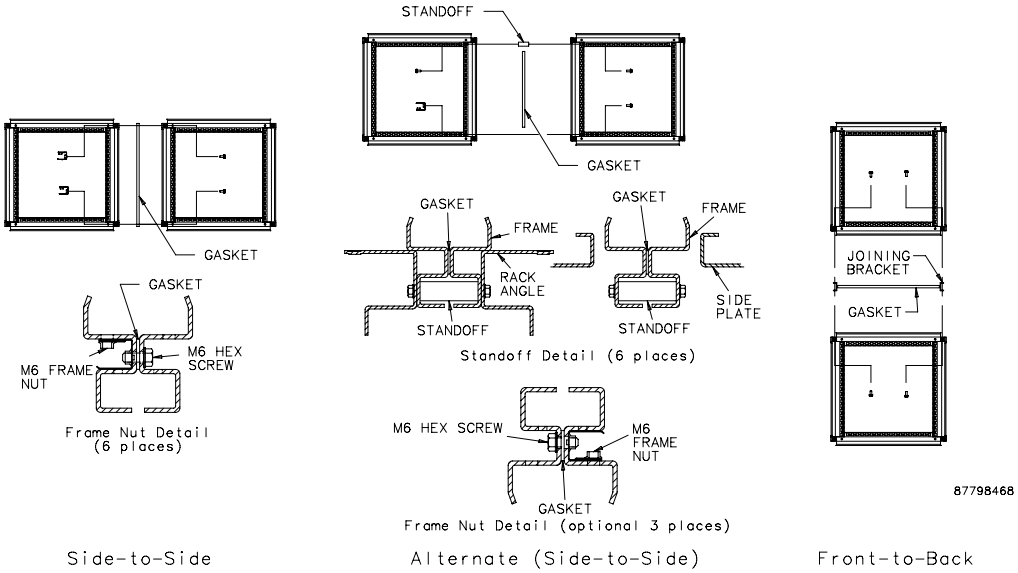

L JOINING BRACKET

The L Joining Bracket, made of 10 gauge steel, is used in conjunction with the standard joining kit as additional support. Pictured hardware is included.

BULLETIN: P20

Catalog Number	Description
PJB2F	L Joining Bracket

PROLINE GROUNDING KIT

The Grounding Kit allows a ProLine or ProLine G2 enclosure to be grounded to VDE specifications. Includes six 12-gauge wires 411 mm (16.19) long with ring terminations and M6 mounting hardware.

BULLETIN: P20

Catalog Number	Wire Size	Length Between Ring Terminals mm/in.	Ring Terminal Hole Diameter mm/in.
PGK	12 ga.	411 16.19	7 .29

MOBILE BASE

Catalog Number	AxB in.	AxB mm	Fits Frame B x C (mm)
PMB66	40.91 x 23.62	1039 x 600	600 x 500 and 600 x 600
PMB69	52.72 x 23.62	1339 x 600	600 x 800 and 600 x 900
PMB86	40.91 x 31.50	1039 x 800	800 x 500 and 800 x 600
PMB89	52.72 x 31.50	1339 x 800	800 x 800 and 800 x 900

Mobile Bases fit 600- and 800-mm wide frames. They extend beyond the front and rear of 600-mm cabinets to provide enhanced stability. Provides front extension only on 800-mm cabinets. Constructed of steel finished in RAL 9005 textured black polyester powder paint. The base fastens to the underside of the frame and provides integral mounting of furnished casters. The front and rear top surfaces of the base are trimmed with black rubber mats 3-mm thick.
Casters and mounting hardware are furnished.
Four non-locking casters provide a maximum load-bearing capacity of 1000 lb. (453.6 kg).
Exercise care when using casters to move the cabinet. Avoid tipping and damage to the cabinet and its contents by slowly moving the cabinet on its casters across smooth, flat flooring. Avoid:

- large cracks
- floor displacement
- seams
- gravel
- any other obstruction

Never use casters while transporting a cabinet by truck on roadways.
Contact nVent HOFFMAN if further information is needed.

BULLETIN: P20

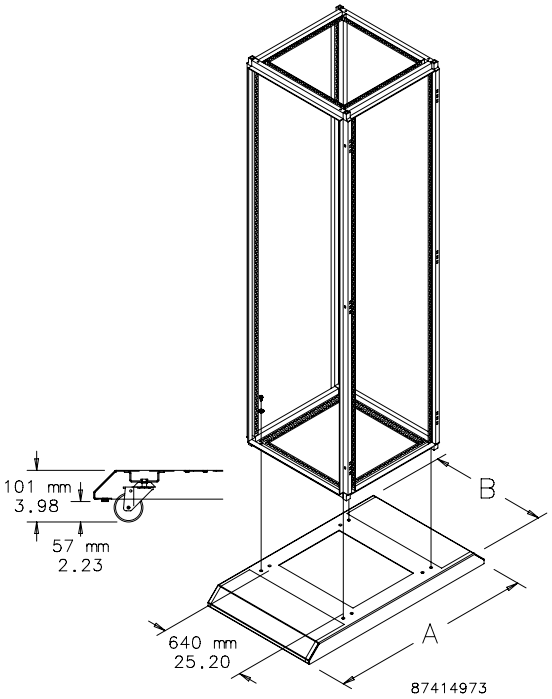

MOBILE BASE LEVELING KIT

Levelers mount in the outer corners of the Mobile Base, providing load-bearing capacity of 1000 lb. (453.6 kg).

BULLETIN: P20

Catalog Number	Description	Use with
PMBLM12	Mobile Base Leveling Kit	Mobile Base

PROLINE S1 RACK ANGLES

Rack angles are sold in pairs that are RU marked on all sides. One side is tapped 10-32 while the other side is square hole (.375 x .375 in.). Both sides are spaced per EIA universal standard. Rack angles may be assembled in either tapped or square-hole configuration. Rack angles and mounting brackets are formed from heavy gauge steel and are polyester powder painted low-gloss, RAL 9005 black. All hardware and brackets are included for assembly into cabinet.

BULLETIN: DPS1

Standard Product

Catalog Number	Fits Cabinet A x B	Rack Units	Rack Unit Configuration
PS1RA126	1200 x 600	24	19-in.
PS1RA127	1200 x 700	24	19- or 23-in.
PS1RA216	2100 x 600	45	19-in.
PS1RA217	2100 x 700	45	19- or 23-in.
PS1RA218	2100 x 800	45	19- or 23-in.
PS1RA236	2300 x 600	48	19-in.
PS1RA237	2300 x 700	48	19-in. or 23-in.
PS1RA238	2300 x 800	48	19-in. or 23-in.

Tapped and Square Holes are per EIA 310-D Universal Rack Unit Spacing (1/2 in. x 5/8 in. x 5/8 in. x 1/2 in.)

FRAME TIE-DOWN BRACKET

The ProLine Frame VELCRO® Tie-Down Bracket provides an easy means to secure and bundle cables using any of the frame's rectangular holes. The bracket can be positioned parallel or perpendicular to the frame and needs no tools to install—just push into any hole and twist to fasten. Proper bend radius is easily maintained with the flexible Velcro tie-down, plus it provides easy initial and future cable installations. Bracket is made of a durable plastic. Both tie-down and bracket are black.

VELCRO is a trademark of VELCRO Industries B.V.

BULLETIN: DPY

Catalog Number	Description	Capacity at Max. Size	Pkg. Qty.
PCMFTD10	10-in. Velcro tie downs	55 CAT 6 cables	10

FRONT-TO-BACK D-RING BRACKET

Manages cable routed between front and back of cabinet. Can be used with optional Universal D-Ring Brackets or Transition Brackets for increased flexibility in managing cables. Mounts to ProLine frame. Secures cable with D-Rings that snap open and closed for secure routing with easy access for wiring changes. D-Rings can be oriented for vertical, front-to-back or side-to-side cable management. RAL 9005 black polyester paint finish. Includes D-Rings and mounting hardware.

BULLETIN: DPY

Catalog Number	Number of D-Rings	B mm/in.	Fits Enclosure Depth mm/in.
PFBDR8	3	640 25.20	800 31.50
PFBDR9	3	740 29.13	900 35.43
PFBDR10	4	840 33.07	1000 39.37
PFBDR11	5	940 37.01	1100 43.31
PFBDR12	5	1040 40.95	1200 47.24

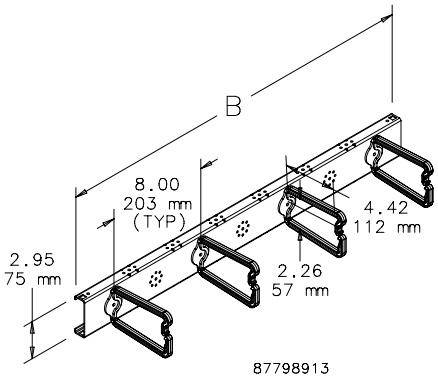

UNIVERSAL POWER STRIP BRACKET

This bracket fits in the corner of the frame of all ProLine cabinets and facilitates mounting a variety of power strips.

BULLETIN: DPY

Catalog Number	Description
EPDUBK	Universal Power Strip Bracket fits all PROLINE cabinets

PDU MOUNTING BRACKET

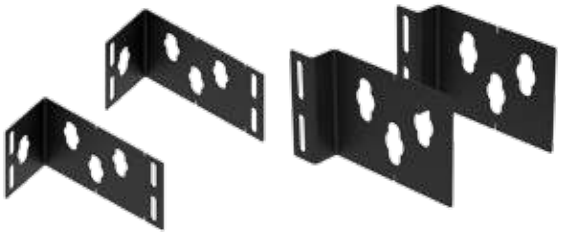

PDU mounting brackets allow PDUs to be installed to the cabinet frame or rack angles using many different configurations. Kit includes two brackets and mounting hardware.

BULLETIN: DPDU

Catalog Number	Color	Color Code	Finish	Thickness (ga.)	Pkg Qty
DPDU2	Jet Black	RAL 9005	Powder Coated	14	2
DPDU3	Jet Black	RAL 9005	Powder Coated	14	2

DPDU2

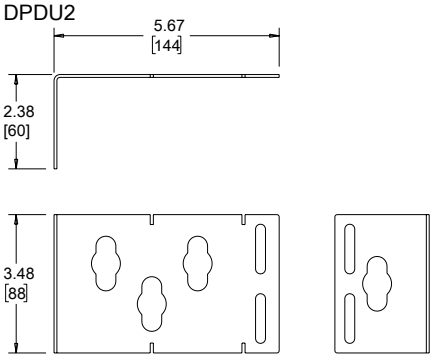

89179656

DPDU3

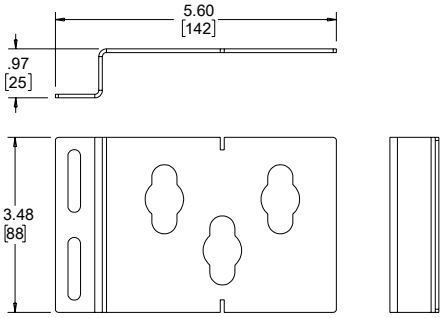

89216822

SCREW PACKAGES

Screw Packages are for mounting rack panels and equipment to rack angles.

BULLETIN: A80, DACCY

Catalog Number	Description	Color	Pkg. Qty.
ES1224	12-24 x 5/8 in. combo head	Plated	20
ES1224250	12-24 x 5/8 in. combo head	Plated	250
ES1224B	12-24 x 5/8in. combo head	Black	20
ES1224B250	12-24 x 5/8 in. combo head	Black	250
ASM5	M5 x 20 mm combo Head	Plated	20
ASM6	M6 x 16 mm combo head	Plated	20
ASM5T	M5 x 12 mm thread-forming Phillips hex head screws	Plated	20
ASM6250	M6 x 16 mm combo head	Plated	250
AS1032	10-32 x 5/8 in. combo head	Plated	20
AS1032250	10-32 x 5/8 in. combo head	Plated	250
AS1032B	10-32 x 5/8 in. combo head	Black	20

Use ASM5T on ProLine frame or ProLine S1 extruded holes.

CAGE NUT PACKAGE

Cage Nut Packages are for use with square-hole rack angles. Cage nuts are plated steel.

BULLETIN: DACCY

Catalog Number	Description	Pkg. Qty.
PM5CN	M5 cage nut	20
PM6CN	M6 cage nut	20
PM6CN250	M6 cage nut	250
P1032CN	10-32 cage nut	20
P1032CN250	10-32 cage nut	250
P1224CN	12-24 cage nut	20
P1224CN250	12-24 cage nut	250

BRUSH STRIP KIT

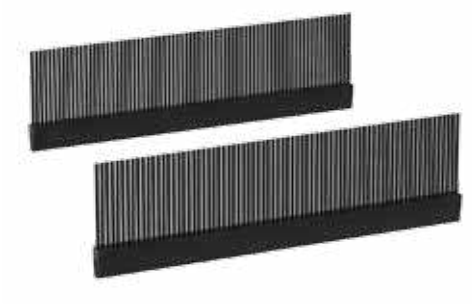

The ProLine S1 Brush Strip Kit provides a level of air flow management while providing a cable pass through. It has a single row of Nylon bristles attached to a flexible, black PVC mounting clip.

Catalog Number	Fits Opening
PBSK1225	12 x 2.5 in. or up to 12 x 5 in. with quantity 2 overlapping