# PROLINE VOICE/DATA AND SERVER CABINETS WITH FAN, TYPE 1

## FEATURES

- Three-point locking handles on all doors provide easy but controlled access; two keys included
- Fully welded frame safely supports sensitive equipment
- Gasketed covers and air intake filters keep contaminants away from equipment, reducing maintenance cost
- Two sets of 19-in. rack angles support both front and rear of equipment
- Rack angles are infinitely adjustable from front to rear for positioning flexibility
- Fan and filter package provides up to 600 CFM of filtered air to help keep equipment cool
- Removable filters can be cleaned to maintain optimal performance
- Mobile base provides easy placement of cabinet
- Levelers and anti-tip bracket secure cabinet to the floor

## SPECIFICATIONS

- Welded 12 gauge steel frame with integral struts
- Front window door made of 16 or 14 gauge steel with safety glass window
- Solid 16 or 14 gauge steel back door
- Solid 16 or 14 gauge steel sides with factory-installed intake filters
- Pagoda top has 115 V fan with 6 ft. (1.8 m) cord. Fan capacity is 600 CFM (16.99 cubic meters/minute).
- Models available with EIA Universal standard 3/8-in. square or 10-32 tapped holes
- Mobile base includes casters, levelers and gland plate
- Gland plate allows easy routing of cable

## FINISH

Pretreated steel coated with RAL 9005 black or RAL 7035 light gray textured, low-gloss polyester powder paint. Other finishes available—contact Hoffman Customer Service.

## INDUSTRY STANDARDS

EIA RS-310-D

UL508A Listed; Type 1; File No. E61997
cUL Listed per CSA C22.2 No 94; Type 1; File No. E61997

## APPLICATION

PROLINE Voice/Data Server Cabinets are ideal for factory floors, warehouses and other remote locations that require filtration of ambient air to protect network equipment.

## THERMAL PERFORMANCE

The thermal performance table is based on:

- Clean intake filters
- Pagoda top fan running at 600 CFM (17 cubic meters/minute)
- Equipment spaced to allow airflow (reduces “hot spot” potential)

***Actual performance may vary depending on equipment layout.***

## LOAD RATING

**Static Load Rating: 2500 lb. (1134 kg)**
A cabinet has a static load when:

- it is in its final, permanent, fully secured location
- its levelers are fully extended
- the anti-tip bracket is installed
- its load is uniformly applied to the two sets of rack-mounting angles, and
- the casters are not supporting any load (use the casters only to move the cabinet to its final location before loading)

**Never move a cabinet with its maximum static load applied.**
Contact Hoffman if further information is needed.

**Casters Maximum Load: 1000 lb. (453 kg)**
Exercise care when using casters to move the cabinet. Do not use casters to move a cabinet with more than 1000 lb. (453 kg) load. Avoid tipping and damage to the cabinet and its contents by slowly moving the cabinet on its casters across smooth, flat flooring. Avoid obstructions such as:

- large cracks
- floor displacement
- seams
- gravel

**Never use casters while transporting a cabinet by truck on roadways.**
Contact Hoffman if further information is needed.

**BULLETIN: DPC, DPSR**

Standard Product

| Catalog Number | AxBxC mm | AxBxC in. | Cabinet Type | Finish | Rack Units | Rack Angle | Hole Type |
|---|---|---|---|---|---|---|---|
| **PDCP2078BFP** | 2203 x 708 x 799 | 86.74 x 27.87 x 31.46 | Voice/Data | Black | 42 | PRA1920TPL1 | Tapped |
| **PDCP2078GFP** | 2203 x 708 x 799 | 86.74 x 27.87 x 31.46 | Voice/Data | Light Gray | 42 | PRA1920TPL1 | Tapped |
| **PSC20610BFP** | 2203 x 608 x 999 | 86.74 x 23.94 x 39.34 | Server | Black | 42 | PRA1920THL1 | Square |
| **PSC20610GFP** | 2203 x 608 x 999 | 86.74 x 23.94 x 39.34 | Server | Light Gray | 42 | PRA1920THL1 | Square |

Replacement filters AFLTR10 (5 filters)

## Package Components and Replacement Parts

| Catalog Number | AxBxC mm | AxBxC in. | Description | Finish |
|---|---|---|---|---|
| PFD2078B | 2000 x 700 x 800 | 78.70 x 27.60 x 31.50 | Frame | Black |
| PFD2078G | 2000 x 700 x 800 | 78.70 x 27.60 x 31.50 | Frame | Gray |
| PFD20610B | 2000 x 600 x 1000 | 78.70 x 23.60 x 39.40 | Frame | Black |
| PFD20610G | 2000 x 600 x 1000 | 78.70 x 23.60 x 39.40 | Frame | Gray |
| PDWG206B | 2000 x 600 | 78.70 x 23.60 | Window Door | Black |
| PDWG206G | 2000 x 600 | 78.70 x 23.60 | Window Door | Gray |
| PDWG207B | 2000 x 700 | 78.70 x 27.60 | Window Door | Black |
| PDWG207G | 2000 x 700 | 78.70 x 27.60 | Window Door | Gray |
| PDS206B | 2000 x 600 | 78.70 x 23.60 | Solid Door | Black |
| PDS206G | 2000 x 600 | 78.70 x 23.60 | Solid Door | Gray |
| PDS207B | 2000 x 700 | 78.70 x 27.60 | Solid Door | Black |
| PDS207G | 2000 x 700 | 78.70 x 27.60 | Solid Door | Gray |
| PSS208FPB | 2000 x 800 | 78.70 x 31.50 | Sides | Black |
| PSS208FPG | 2000 x 800 | 78.70 x 31.50 | Sides | Gray |
| PSS2010FPB | 2000 x 1000 | 78.70 x 39.37 | Sides | Black |
| PSS2010FPG | 2000 x 1000 | 78.70 x 39.37 | Sides | Gray |
| PPTHP78B | 700 x 800 | 27.60 x 31.50 | Top | Black |
| PPTHP78G | 700 x 800 | 27.60 x 31.50 | Top | Gray |
| PPTHP610B | 600 x 1000 | 23.60 x 39.37 | Top | Black |
| PPTHP610G | 600 x 1000 | 23.60 x 39.37 | Top | Gray |
| PBMG78B | 700 x 800 | 27.60 x 31.50 | Mobile Base | Black |
| PBMG610B | 600 x 1000 | 23.60 x 39.37 | Mobile Base | Black |

## Cooling Capacity vs. Intake Temperature
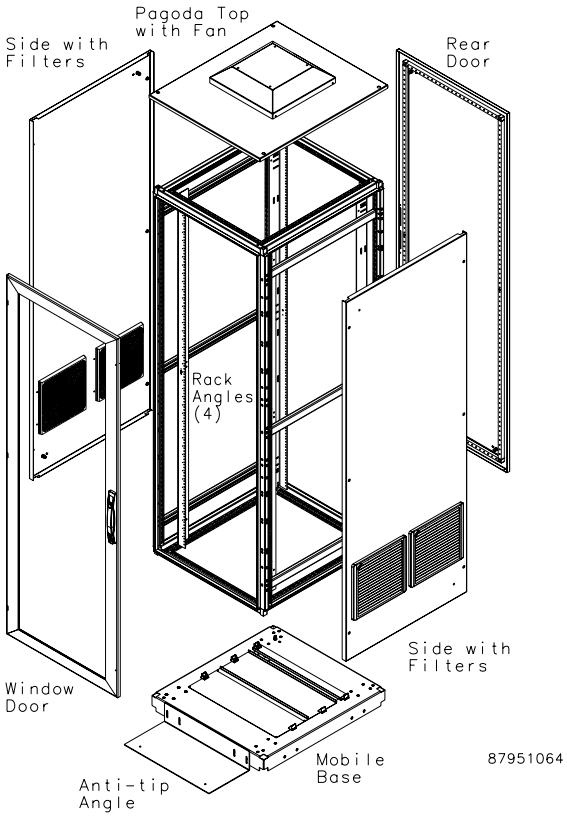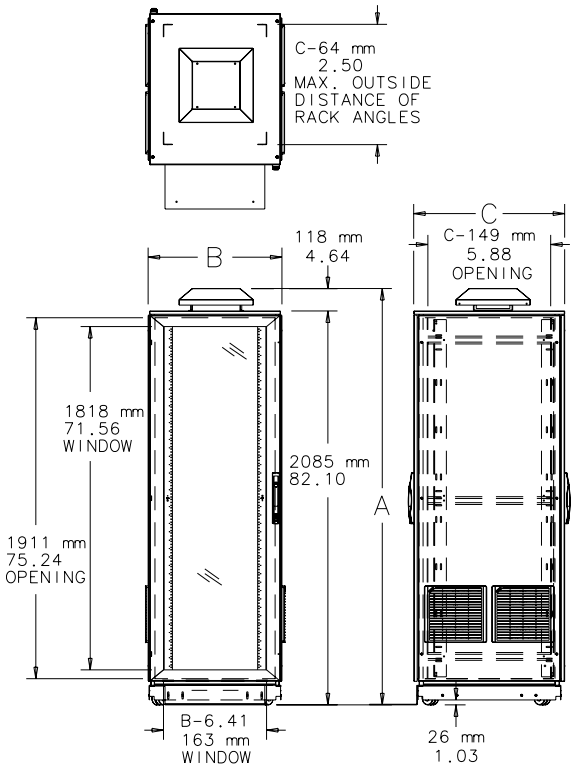
| Intake Air Temperature (°F) | Intake Air Temperature (°C) | Cooling Capacity (W) |
|---|---|---|
| 70 | 21 | 3,500 |
| 76 | 24 | 3,000 |
| 80 | 27 | 2,000 |
| 85 | 29 | 1,500 |
| Above 85 | Above 29 | Not recommended |