Dripshield, NEMA 4X

1. Clean top of enclosure with solvent to remove dirt and oil residues.
2. Locate dripshield position per dimensions below. Mark and drill mounting holes in enclosure with a 13/64 drill bit. Mounting holes are predrilled in the dripshield.
3. Apply sealing compound to mounting flange of dripshield and around each mounting hole. Position dripshield and secure with stainless screws with o–rings and stainless nuts.

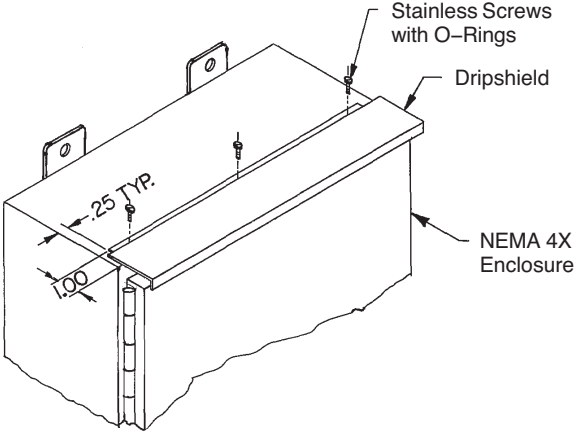

This accessory maintains UL/CSA Type 12,4,4X when installed per these instructions.

This accessory is covered by UL file E61997 and CSA file LR42186.

 © 2019 Hoffman Enclosures Inc.