PROLINE G2

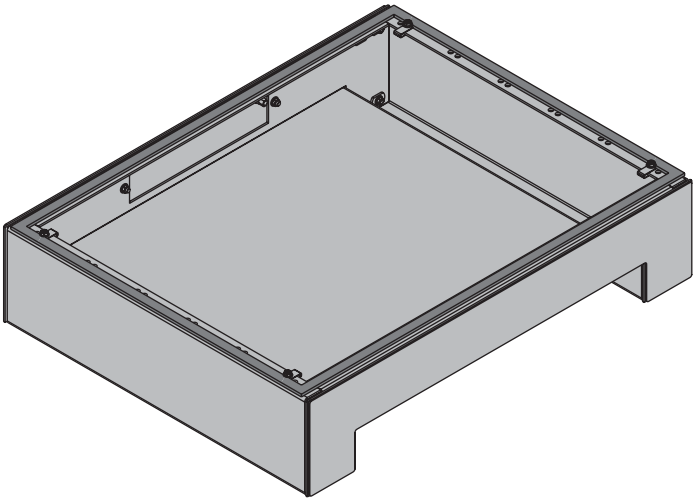

© 2018 Hoffman Enclosures Inc.
PH 763 422 2211 • nVent.com/HOFFMAN
P/N 89129248

89129262

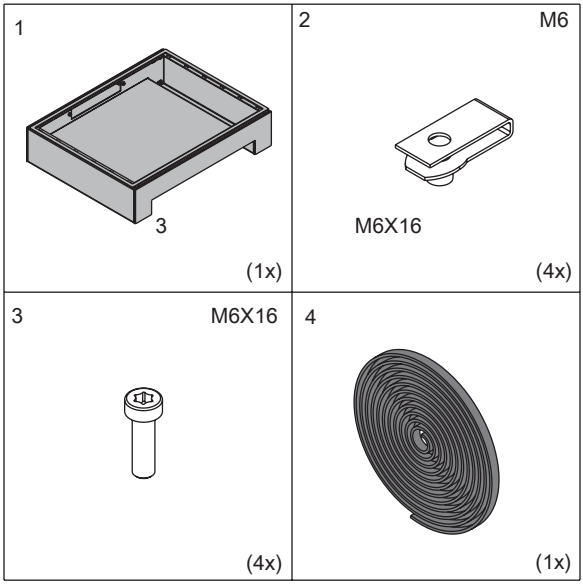

© 2018 Hoffman Enclosures Inc.

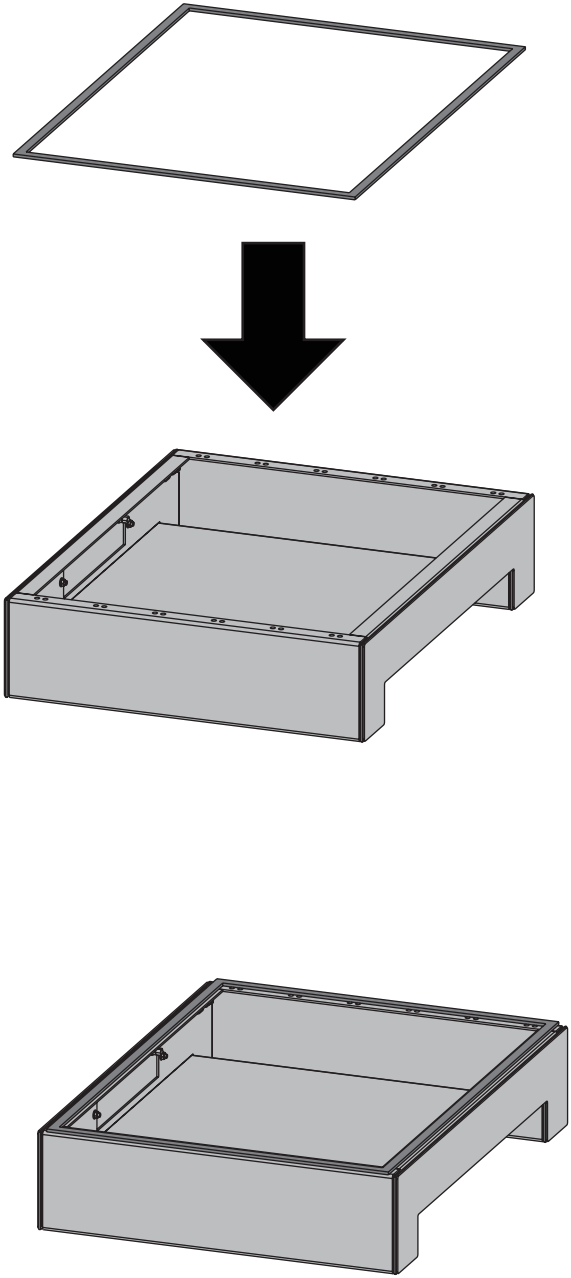

1

© 2018 Hoffman Enclosures Inc.

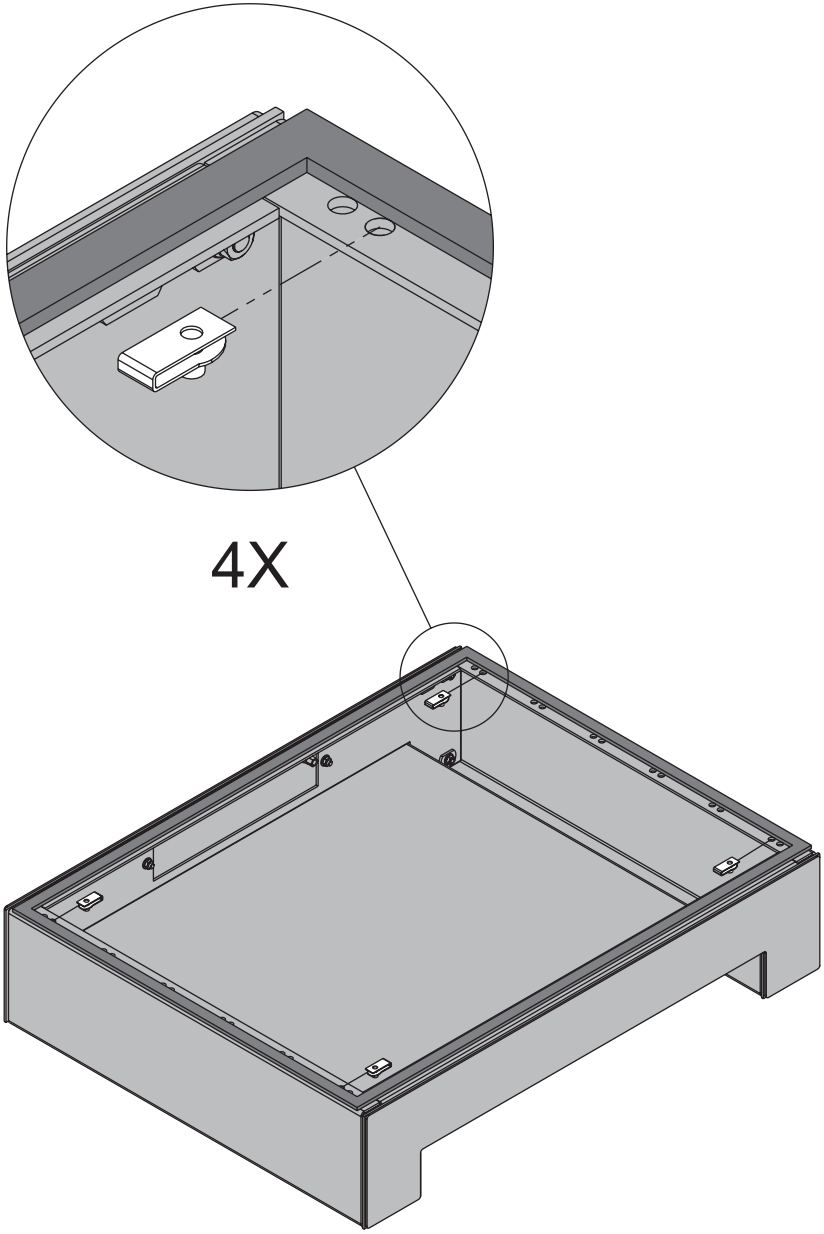

2

© 2018 Hoffman Enclosures Inc.

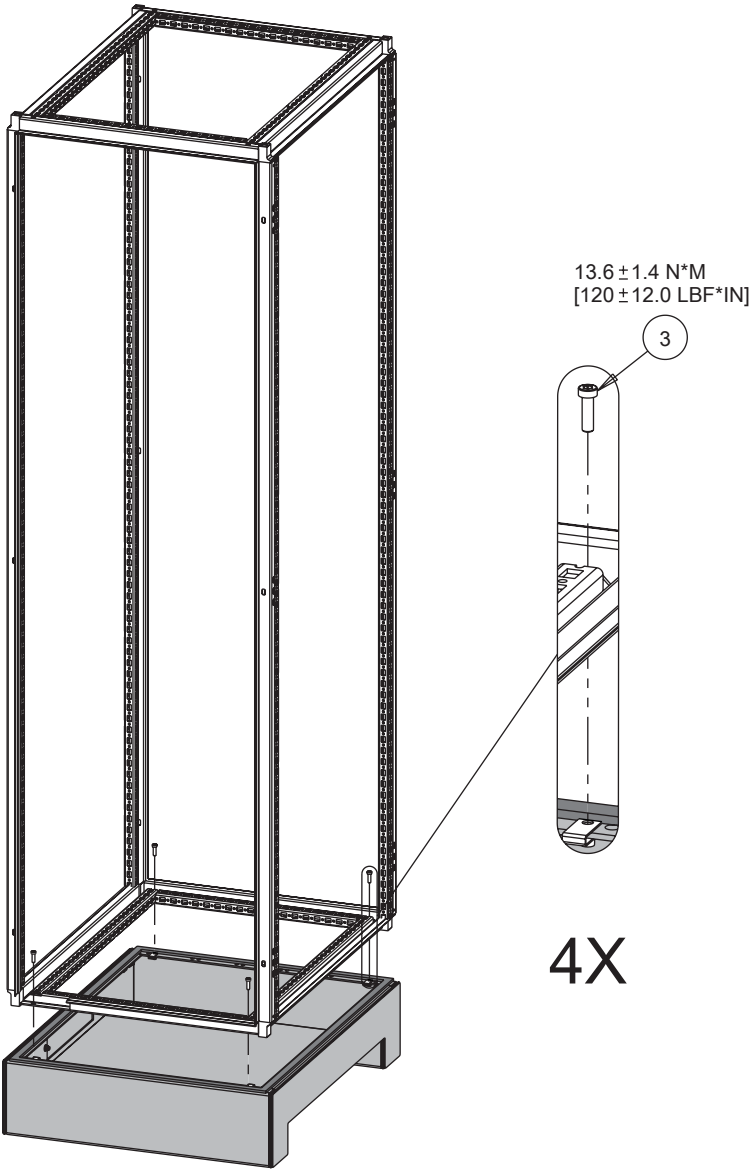

3

© 2018 Hoffman Enclosures Inc.

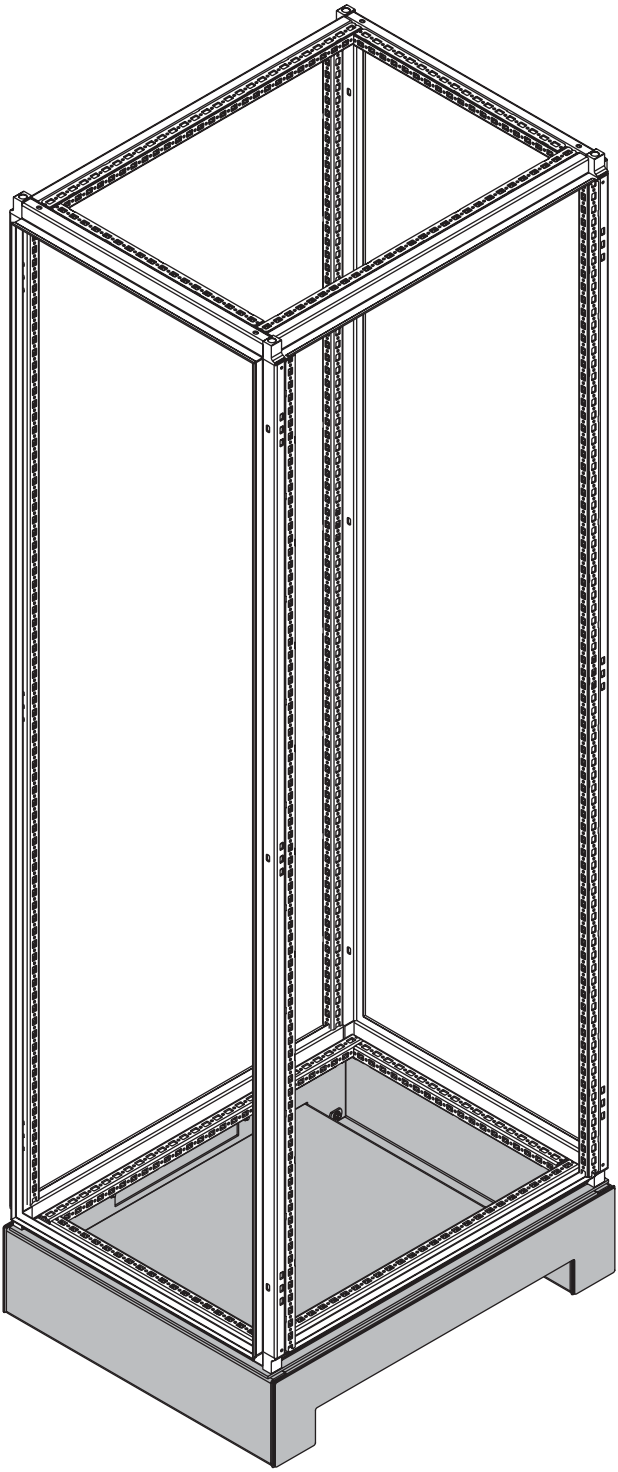

4

© 2018 Hoffman Enclosures Inc.

© 2018 Hoffman Enclosures Inc.
PH 763 422 2211 • nVent.com/HOFFMAN
P/N 89129248

89129262

© 2018 Hoffman Enclosures Inc.
PH 763 422 2211 • nVent.com/HOFFMAN
P/N 89129248

89129262