THERMOELECTRIC COOLERS INDOOR/OUTDOOR

Unshrouded
60, 100 and 200 Watts

Shrouded
60, 100 and 200 Watts

INDUSTRY STANDARDS

UR, cUR Recognized; Type 12, 3R, 4, 4X; File No. SA6453

CE
IP 65

APPLICATION

Thermoelectric Coolers minimize downtime and component loss by removing heat around critical components within an enclosure. These compact, low-profile coolers using the Peltier effect allow for cooling of small indoor and outdoor enclosures. No condensers, compressors or filters are required making it a reliable solution for demanding low-maintenance environments.

FEATURES

- DC Powered operation for 24V and 48V applications
- Low profile design allows for mounting vertically and horizontally on any enclosure to avoid interference with internal components
- Filterless design reduces maintenance requirements
- Contains no refrigerant, making it earth friendly
- Prewired with simple terminal block for easy wiring connections
- Operates on the Peltier effect for cooling or heating
- Compressor-free air conditioning for demanding indoor and outdoor applications
- Shrouded and unshrouded models included in standard packages
- Operating temperature range -40 C (-40 F) to 55 C (131 F)
- Partial recess mount

SPECIFICATIONS

- Models
  60 Watt, 24 Volt
  100 Watt, 24/48 Volt
  200 Watt, 24/48 Volt

FINISH

- Shrouded finish includes both powder coat paint RAL 7035 light gray standard and stainless steel 304

ACCESSORIES

Thermoelectric Temperature Controller
Thermoelectric Condensate Manager

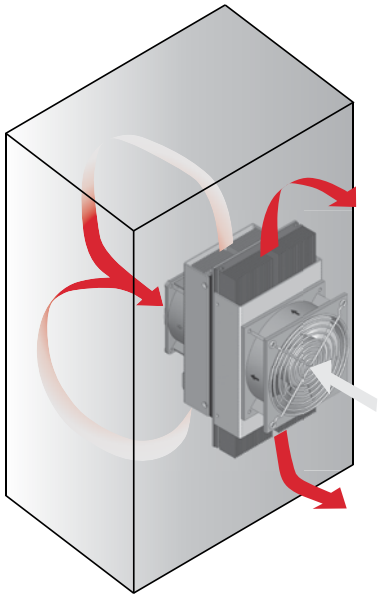

Performance Data **TE09 60W 204 BTU/Hr. (24 V)**

CATALOG NUMBERS			
Description	24V w/o shroud	24V w/ painted shroud	24V w/ SS shroud
Catalog Number	TE090624020	TE090624010	TE090624011
COOLING PERFORMANCE			
BTU/Hr.	**178**	**178**	**178**
Watts	**52**	**52**	**52**
Operating Temperature Range:			
Maximum (°C / °F)	55 / 131	55 / 131	55 / 131
Minimum (°C / °F)	-40 / -40	-40 / -40	-40 / -40
Air Flow at 0 Static Pressure:			
Internal loop (CFM / M^3/Hr.)	24 / 41	24 / 41	24 / 41
External loop (CFM / M^3/Hr.)	80 / 136	80 / 136	80 / 136
Nominal Heating Watts	64	64	64
ELECTRICAL DATA			
Input DC Voltage			
Nominal (VDC)	**24**	**24**	**24**
Minimum (VDC)	18	18	18
Maximum (VDC)	27.6	27.6	27.6
Power Consumption 95 F / 95 F (35 C / 35 C) (W)	89	89	89
Rated Current (Amps) at 131 F/131 F (55 C/55 C)	4.4	4.4	4.4
Agency Approvals	UR, cUR Recognized CE	UR, cUR Recognized CE	UR, cUR Recognized CE
Power Input Description	Terminal Block	Terminal Block	Terminal Block
ENCLOSURE PROTECTION			
UL Type / IP Rating	Type 12,3R,4,4X / IP 65	Type 12,3R,4 / IP 65	Type 12,3R,4,4X / IP 65
SOUND LEVEL			
At 1.5 Meters	65 dBA	65 dBA	65 dBA
UNIT CONSTRUCTION			
Heat Sink Material	Anodized Aluminum	Anodized Aluminum	Anodized Aluminum
Shroud Material	N/A	Galvanized Steel	Stainless Steel
Shroud Finish	N/A	RAL 7035 light-gray, semi-textured powder-coat paint standard	No. 4 Brushed Finish
UNIT DIMENSIONS			
Height (in. / mm)	9.06/230	9.29/236	9.29/236
Width (in. / mm)	4.84/123	5.02/128	5.02/128
Depth (in. / mm)	6.91/176	6.94/176	6.94/176
Weight (lb. / kg)	6.00/2.70	7.80/3.60	7.80/3.60

60 W 24 V

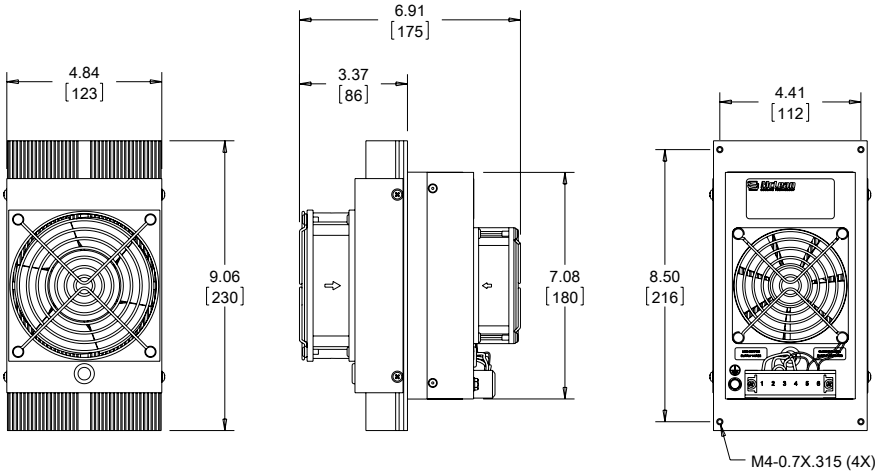

60 W 24 V

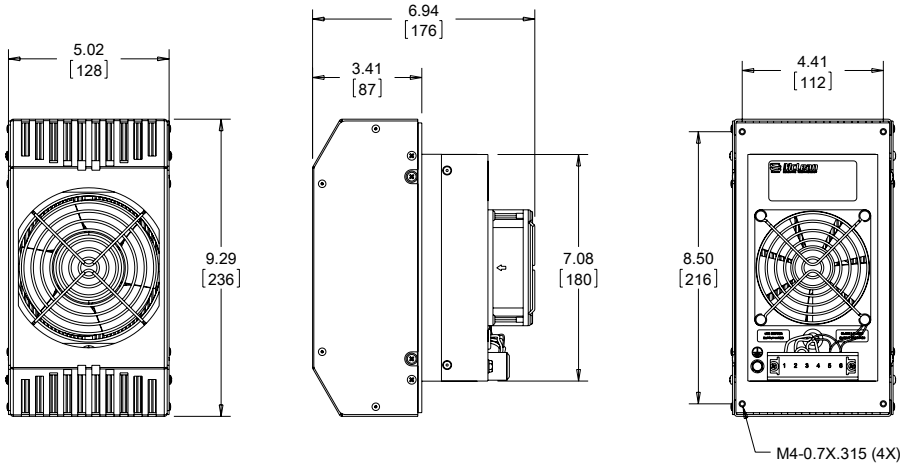

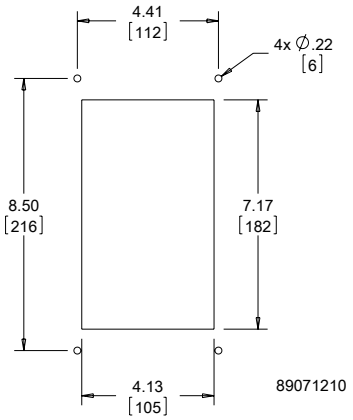

Cutout Dimensions

Visit nVent.com/HOFFMAN to download 2D and 3D CAD drawings into the overall design of your electrical system.

Performance Data **TE12 100W 341 BTU/Hr. (24/48 V)**

CATALOG NUMBERS					
Description	24V w/o shroud	24V w/ painted shroud	24V w/ SS shroud	48V w/o shroud	48V w/ painted shroud
Catalog Number	TE121024020	TE121024010	TE121024011	TE121048020	TE121048010
COOLING PERFORMANCE					
BTU/Hr.	**321**	**321**	**321**	**321**	**321**
Watts	**94**	**94**	**94**	**94**	**94**
Operating Temperature Range:					
Maximum (°C / °F)	55 / 131	55 / 131	55 / 131	55 / 131	55 / 131
Minimum (°C / °F)	-40 /-40	-40 /-40	-40 /-40	-40 /-40	-40 /-40
Air Flow at 0 Static Pressure:					
Internal loop (CFM / M^3/Hr.)	62 / 105	62 / 105	62 / 105	62 / 105	62 / 105
External loop (CFM / M^3/Hr.)	86 / 146	86 / 146	86 / 146	86 / 146	86 / 146
Nominal Heating Watts	94	94	94	94	94
ELECTRICAL DATA					
Input DC Voltage					
Nominal (VDC)	**24**	**24**	**24**	**48**	**48**
Minimum (VDC)	18	18	18	40	40
Maximum (VDC)	27.6	27.6	27.6	56.7	56.7
Power Consumption 95 F / 95 F (35 C / 35 C) (W)	162	162	162	162	162
Rated Current (Amps) at 131 F/131 F (55 C/55 C)	8.5	8.5	8.5	4.4	4.4
Agency Approvals	UR, cUR Recognized CE GOST	UR, cUR Recognized CE GOST	UR, cUR Recognized CE GOST	UR, cUR Recognized CE GOST	UR, cUR Recognized CE GOST
Power Input Description	Terminal Block	Terminal Block	Terminal Block	Terminal Block	Terminal Block
ENCLOSURE PROTECTION					
UL Type / IP Rating	Type 12,3R,4,4X / IP 65	Type 12,3R,4 / IP 65	Type 12,3R,4,4X / IP 65	Type 12,3R,4,4X / IP 65	Type 12,3R,4 / IP 65
SOUND LEVEL					
At 1.5 Meters	68 dBA	68 dBA	68 dBA	68 dBA	68 dBA
UNIT CONSTRUCTION					
Heat Sink Material	Anodized Aluminum	Anodized Aluminum	Anodized Aluminum	Anodized Aluminum	Anodized Aluminum
Shroud Material	N/A	Galvanized Steel	Stainless Steel	N/A	Galvanized Steel
Shroud Finish	N/A	RAL 7035 light-gray, semi-textured powder-coat paint standard	No. 4 Brushed Finish	N/A	RAL 7035 light-gray, semi-textured powder-coat paint standard
UNIT DIMENSIONS					
Height (in. / mm)	11.81/300	12.00/305	12.00/305	11.81/300	12.00/305
Width (in. / mm)	6.02/153	6.18/157	6.18/157	6.02/153	6.18/157
Depth (in. / mm)	7.40/188	7.43/189	7.43/189	7.40/188	7.43/189
Weight (lb. / kg)	8.50/3.90	11.00/5.00	11.00/5.00	8.50/3.90	11.00/5.00

100 W 24/48 V

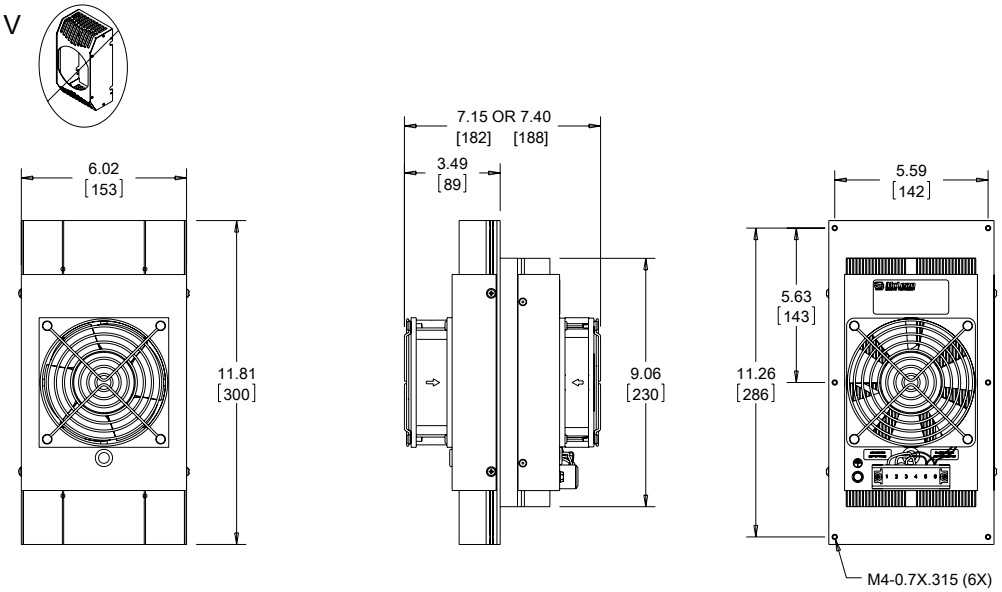

100 W 24/48 V

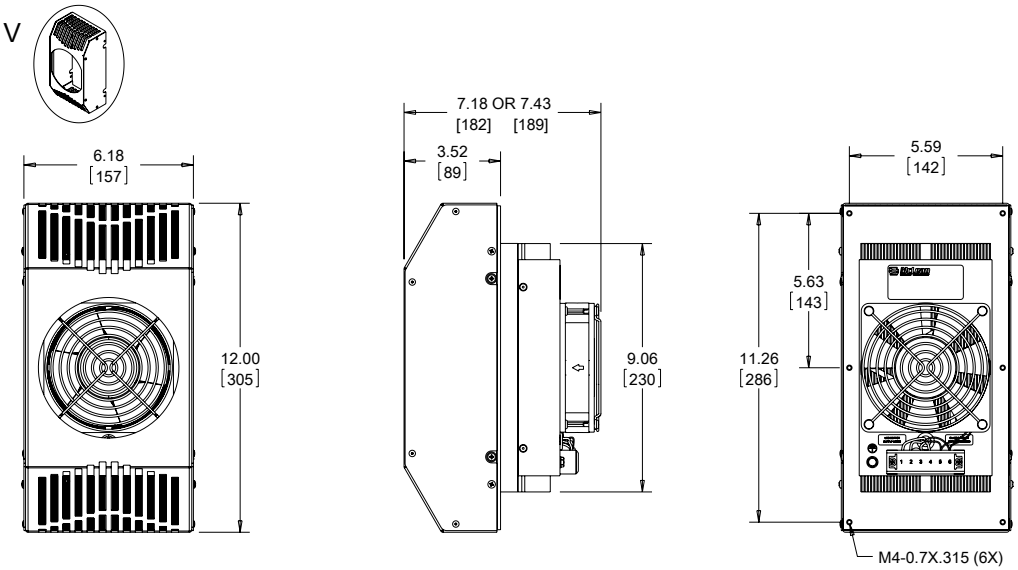

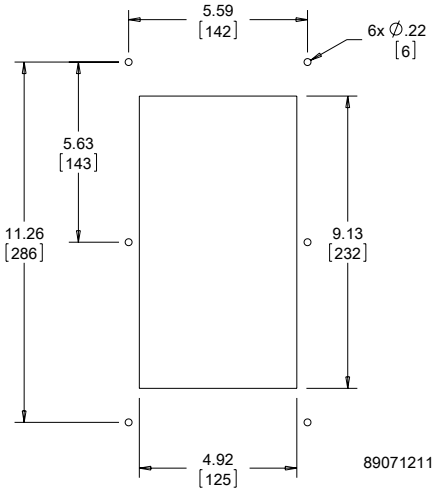

Cutout Dimensions

Visit nVent.com/HOFFMAN to download 2D and 3D CAD drawings into the overall design of your electrical system.

Performance Data **TE16 200W 682 BTU/Hr. (24/48 V)**

CATALOG NUMBERS					
Description	24V w/o shroud	24V w/ painted shroud	24V w/ SS shroud	48V w/o shroud	48V w/ painted shroud
Catalog Number	TE162024020	TE162024010	TE162024011	TE162048020	TE162048010
COOLING PERFORMANCE					
BTU/Hr.	**567**	**567**	**567**	**567**	**567**
Watts	**166**	**166**	**166**	**166**	**166**
Operating Temperature Range:					
Maximum (°C / °F)	55 / 131	55 / 131	55 / 131	55 / 131	55 / 131
Minimum (°C / °F)	-40 /-40	-40 /-40	-40 /-40	-40 /-40	-40 /-40
Air Flow at 0 Static Pressure:					
Internal loop (CFM / M^3/Hr.)	62 / 105	62 / 105	62 / 105	62 / 105	62 / 105
External loop (CFM / M^3/Hr.)	86 / 146	86 / 146	86 / 146	86 / 146	86 / 146
Nominal Heating Watts	146	146	146	146	146
ELECTRICAL DATA					
Input DC Voltage					
Nominal (VDC)	**24**	**24**	**24**	**48**	**48**
Minimum (VDC)	18	18	18	40	40
Maximum (VDC)	27.6	27.6	27.6	56.7	56.7
Power Consumption 95 F / 95 F (35 C / 35 C) (W)	295	295	295	295	295
Rated Current (Amps) at 131 F/131 F (55 C/55 C)	14.7	14.7	14.7	7.6	7.6
Agency Approvals	UR, cUR Recognized CE GOST	UR, cUR Recognized CE GOST	UR, cUR Recognized CE GOST	UR, cUR Recognized CE GOST	UR, cUR Recognized CE GOST
Power Input Description	Terminal Block	Terminal Block	Terminal Block	Terminal Block	Terminal Block
ENCLOSURE PROTECTION					
UL Type / IP Rating	Type 12,3R,4,4X / IP 65	Type 12,3R,4 / IP 65	Type 12,3R,4,4X / IP 65	Type 12,3R,4,4X / IP 65	Type 12,3R,4 / IP 65
SOUND LEVEL					
At 1.5 Meters	68 dBA	68 dBA	68 dBA	68 dBA	68 dBA
UNIT CONSTRUCTION					
Heat Sink Material	Anodized Aluminum	Anodized Aluminum	Anodized Aluminum	Anodized Aluminum	Anodized Aluminum
Shroud Material	N/A	Galvanized Steel	Stainless Steel	N/A	Galvanized Steel
Shroud Finish	N/A	RAL 7035 light-gray, semi-textured powder-coat paint standard	No. 4 Brushed Finish	N/A	RAL 7035 light-gray, semi-textured powder-coat paint standard
UNIT DIMENSIONS					
Height (in. / mm)	15.75/400	15.93/405	15.93/405	15.75/400	15.93/405
Width (in. / mm)	7.09/180	7.35/187	7.35/187	7.09/180	7.35/187
Depth (in. / mm)	7.25/184	7.27/185	7.27/185	7.25/184	7.27/185
Weight (lb. / kg)	14.80/6.70	18.60/8.40	18.60/8.40	14.80/6.70	18.60/8.40

200 W 24/48 V

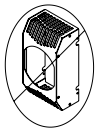

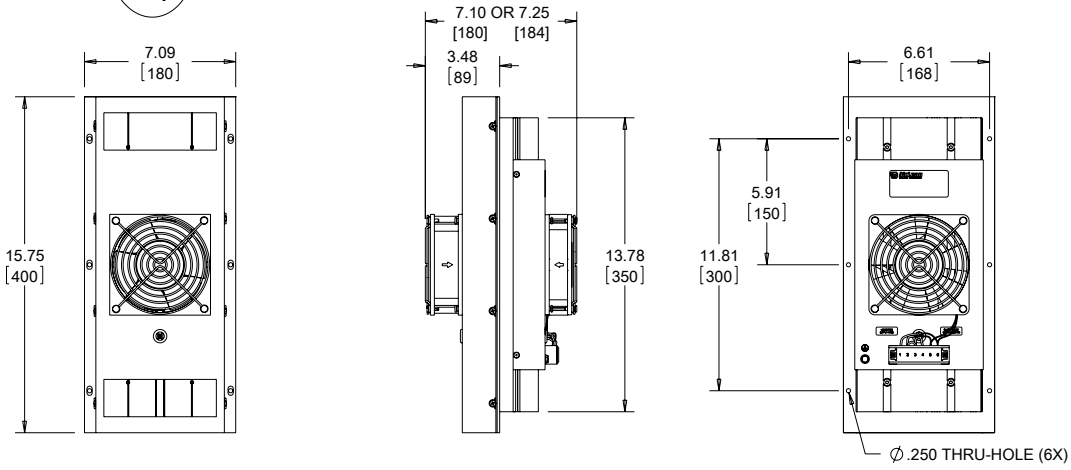

200 W 24/48 V

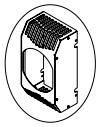

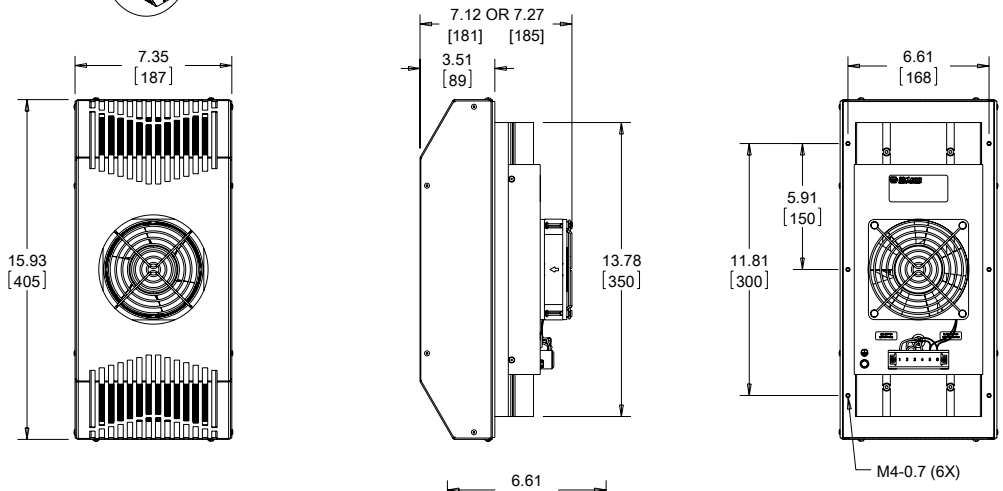

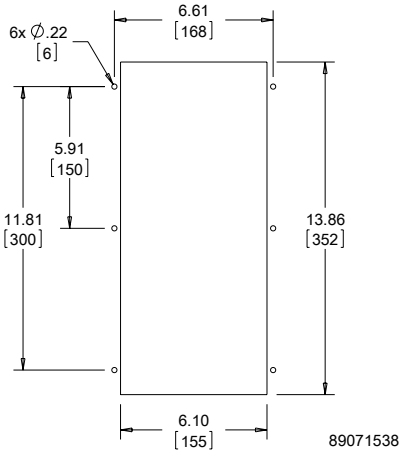

Cutout Dimensions

Visit nVent.com/HOFFMAN to download 2D and 3D CAD drawings into the overall design of your electrical system.

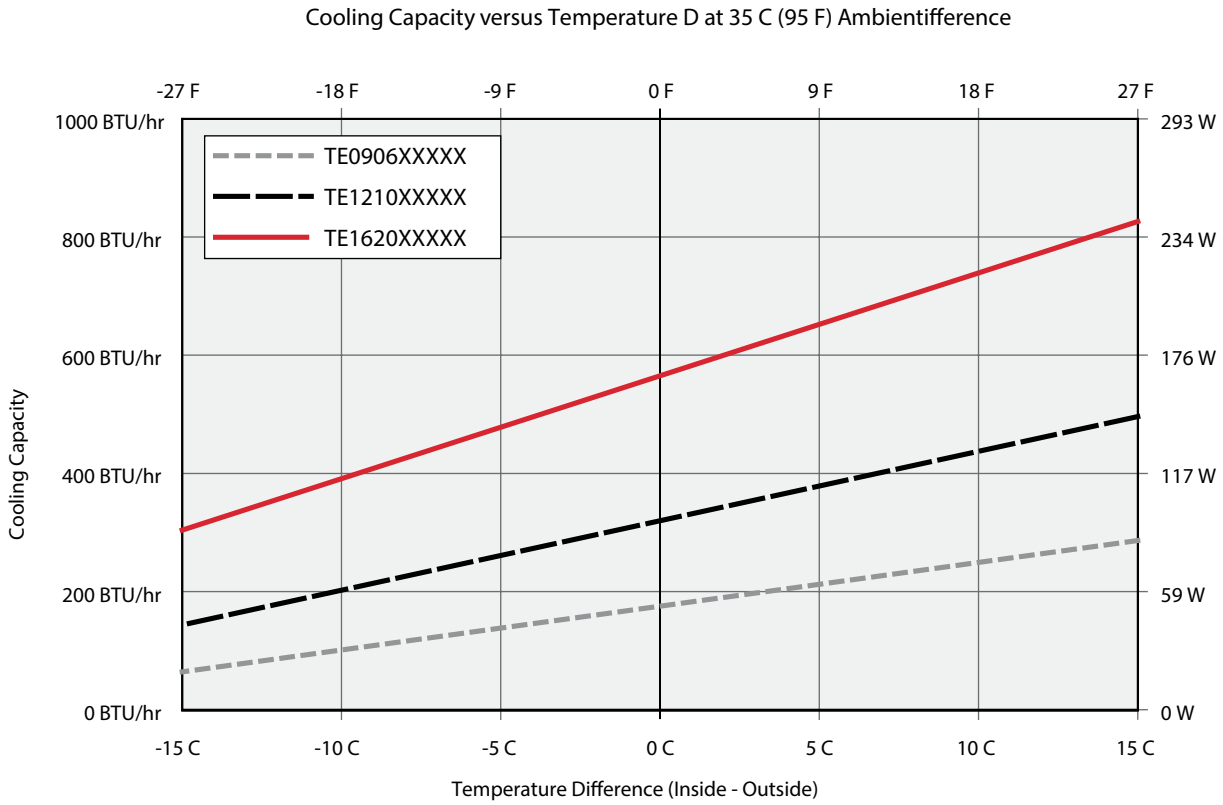
Cooling Capacity versus Temperature D at 35 C (95 F) Ambientifference
-27 F
-18 F
-9 F
0 F
9 F
18 F
27 F
1000 BTU/hr
800 BTU/hr
600 BTU/hr
400 BTU/hr
200 BTU/hr
0 BTU/hr
293 W
234 W
176 W
117 W
59 W
0 W
TE0906XXXXX
TE1210XXXXX
TE1620XXXXX
Cooling Capacity
-15 C
-10 C
-5 C
0 C
5 C
10 C
15 C
Temperature Difference (Inside - Outside)

nVent | HOFFMAN

THERMOELECTRIC TEMPERATURE CONTROLLER

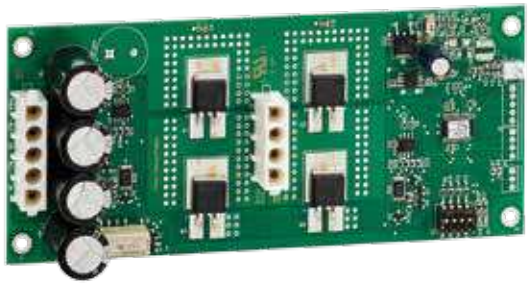

INDUSTRY STANDARDS

UL Recognized; File No. E351017

FEATURES

- Provides PWM regulation of cooling and heating output for TEC units
- Automatically switches between cooling and heating
- 4 cooling temperature set points range from 22.5 C to 35 C (35 C Factory Setting)
- 3 heating temperature set points range from -5 C to 15 C (15 C Factory Setting)
- Heating function can be easily disabled if desired
- On-board LEDS indicate low temp, high temp alarm, and overall system status
- Dry contact relay output provides for external alarm indication

Performance Data

CATALOG NUMBERS		
	TEC24VCNTLRN	TEC48VCNTLRN
ELECTRICAL DATA		
Rated Voltage (VDC)	24	48
Operating Range (VDC)	18 to 30	40 to 60
Current @ Rated Voltage (Amps)	17.2	8.6
Operating Temperature Range		
Maximum (°F/°C)	131 / 55	
Minimum (°F/°C)	-40 / -40	
Temperature Accuracy (°F/°C)	± 3.6 / 2.0	
Alarm Contact Rating	1) 0.5 A max @ 24 VDC - from same source of power as unit, SELV, non-power limited (greater than 15 W); OR 2) 0.5 A max @ 24 VAC - from, SELV, Class 2 safety isolating transformer.	1) 0.5 A max @ 48 VDC - from same source of power as unit, SELV, non-power limited (greater than 15 W); OR 2) 0.5 A max @ 24 VAC - from, SELV, Class 2 safety isolating transformer.
UNIT DIMENSIONS		
PCB Dimensions		
Height (in/mm)	1.20 / 30	
Width (in/mm)	2.88 / 73	
Length (in/mm)	6.50 / 165	
Weight (lb./kg)	0.21 / 0.10	
Mounting Bracket Dimensions		
Height (in/mm)	0.50 / 13	
Width (in/mm)	3.19 / 91	
Length (in/mm)	6.50 / 165	
Weight (lb./kg)	0.29 / 0.13	
Accessories		
Input Supply Harness	60-in. (1525mm) long Supply Harness Catalog Number TECSUPPLYHARNESS	
Board to TEC Harness	36-in. (915mm) long Control Harness Catalog Number TECCONTROLHARNESS	

THERMOELECTRIC CONDENSATE MANAGER

INDUSTRY STANDARDS

Maintains UL/cUL Type 3R, 12, 4 and 4X rating when properly installed

FEATURES

- Includes all required hardware and vent drain
- Maintains the integrity of Type 4 or Type 4X enclosure
- Drains condensation to bottom of enclosure via vent drain (vent drain included with package)
- Utilizes existing mounting holes and fasteners of thermoelectric cooler that requires no additional mounting

FINISH

- Pan Material Galvanized steel polyester powder coat paint with RAL 7035
- Vent drain material options include stainless steel or non-metallic

Performance Data

CATALOG NUMBERS						
	TEC60WCMSS4	TEC60WCMNM	TEC100WCMSS4	TEC100WCMNM	TEC200WCMSS4	TEC200WCMNM
Fits TEC Unit Model	All TE09	All TE09	All TE12	All TE12	All TE16	All TE16
UNIT CONSTRUCTION						
Pan Material	Galvanized Steel					
Pan Finish	RAL 7035 light-gray, semi-textured powder-coat paint standard					
Vent Drain Material	Stainless Steel	Non-Metallic	Stainless Steel	Non-Metallic	Stainless Steel	Non-Metallic
UNIT DIMENSIONS						
Height (in./mm)	.75/19	.75/19	.75/19	.75/19	.75/19	.75/19
Width (in./mm)	5.50/140	5.50/140	6.25/159	6.25/159	7.44/189	7.44/189
Depth (in./mm)	2.50/64	2.50/64	2.50/64	2.50/64	2.50/64	2.50/64