We connect and protect

Spectracool Air Conditioner

N36 Model

Instruction Manual

R513A

P/N 89246227 Rev. A

TABLE OF CONTENTS

Warranty And Return Policy **3**
General Safety Instructions **4**
Receiving The Air Conditioner **4**
Handling And Testing The Air Conditioner **4**
How To Read Model Numbers **4**
Installation Instructions **5**
Dimension Drawings **5**
N36 Generic Model Drawing with Thermostats 5
N36 Generic Model Drawing with Remote Access Control 6
Mounting Cutout Dimension **7**
Wire Diagrams And Schematics **8**
N36 1-Phase Generic with Thermostat Control Wire Diagram (actual unit options may vary) 8
N36 1-Phase Generic with Thermostat Control Schematic (actual unit options may vary) 9
N36 8K BTU 230 V only with Thermostat Control Wire Diagram (actual unit options may vary) 10
N36 8K BTU 230 V only with Thermostat Control Schematic (actual unit options may vary) 11
N36 3-Phase with Thermostat Control Generic Wire Diagram (actual unit options may vary) 12
N36 3-Phase with Thermostat Control Generic Schematic (actual unit options may vary) 13
N36 1-Phase with Remote Access Control Generic Wiring Diagram (actual unit options may vary) 14
N36 1-Phase with Remote Access Control Generic Schematic (actual unit options may vary) 15
N36 8K BTU 230 V only with Remote Access Control Wire Diagram (actual unit options may vary) 16
N36 8K BTU 230 V only with Remote Access Control Schematic (actual unit options may vary) 17
N36 3-Phase Generic with Remote Access Control Wire Diagram (actual unit options may vary) 18
N36 3-Phase Generic with Remote Access Control Schematic (actual unit options may vary) 19
Components List **20**
Parts List **21**
Technical Information **22**
Design Data 22
Sequence Of Operation **22**
Heating 22
Cooling 22
Standard And Optional Component Operation **22**
Thermostat 22
Remote Access Control (Optional) 23
Head Pressure Control 23
Contactor 23
Phase Monitor (N360X46GXXX Only) 23
460 V TO 230 V Transformer (N360X46GXXX Only) 23
115/230 V TO 10 V Transformer (Optional) 23
115/230 V TO 24 V Transformer and Relay (Optional) 23
Remote Access Control (Optional) **24**
Overview 24
Energizing the Controller 24
Control Status Indication 24
Keypad 25
Main Field 25
Icons 25

Displaying And Changing Program Settings **27**
To view or access the settings 27
Heat/cool operating parameters 27
Alarm parameters 27
View alarms 28
View the alarms in the alarm history folder 28
To reset the alarms in alarm history folder 29
To reset parameters to factory default 29
Displaying temperature data on screen 29
Compressor restart time delay 29
Alarm output contact 29
Alarm input connection 29
Primary-secondary (PS) mode 30
Connecting units together in primary/secondary mode 30
To configure the controller from single mode to PS mode, simply follow below procedures 31
Connecting units together in lead/lag mode 31
To configure the controller from single mode to LL mode, simply follow below procedures. Perform this configuration for both air conditioner. **32**
Air Conditioner Unit Remote Communication Features **32**
USB communication 32
Ethernet communication 32
Both Ethernet and USB communication allow the ability to: 32
Software and configuration file downloads 33
Using nVent HOFFMAN PC Interface Tool **33**
USB communication mode 33
To view the controller data information from the A/C unit **33**
To change the temperature settings to the controller **33**
To view and change the ethernet card (RAC) information **33**
To change the static network to dynamic network mode 34
USB communication mode 34
Ethernet communication mode 35
To monitor multiple A/C units in the network 35
Alarm log accessible with support protocol 35
Remote access control pin-out 36
Maintenance **37**
Compressor 37
Inlet air filter 37
How to remove, clean or install a new inlet air filter 37
Condenser and evaporator air movers 38
Refrigerant loss 38
Preventative Maintenance/Inspection **39**
Trouble Shooting **40**
F-Gas Information **44**

WARRANTY AND RETURN POLICY

https://HOFFMAN.nVent.com/en-us/cooling-warranty-registration

https://nVent.widen.net/s/s8xgmxhvk2/89153291

GENERAL SAFETY INSTRUCTIONS

Observe the following general safety instructions for installation and operation of this product:

- This appliance is for installation only in locations not accessible to the general public.
- This appliance is not intended for use by persons, including children, with reduced physical, sensory, or mental capabilities, or lack of experience and knowledge, unless they have been given supervision or instruction concerning the use of the appliance by a person responsible for their safety.
- Children should be supervised to ensure that they do not play with the appliance.
- This appliance should be installed in accordance with national wiring regulations.
- Follow all precautions detailed in the following sections during transportation, receiving, testing, operation and maintenance.
- This appliance is intended for altitudes up to 10,000 ft (3,048 m) from sea level. For every additional 1000 ft of elevation, the capacity of this unit is derated by 1%.

RECEIVING THE AIR CONDITIONER

Inspect the air conditioner. Check for concealed damage that may have occurred during shipment. Look for dents, scratches, loose assemblies, evidence of oil, etc. Damage evident upon receipt should be noted on the freight bill. Damage should be brought to the attention of the delivering carrier – NOT to nVent Equipment Protection – within 15 days of delivery. Save the carton and packing material and request an inspection. Then file a claim with the delivering carrier.

nVent Equipment Protection cannot accept responsibility for freight damages; however, we will assist you in any way possible.

HANDLING AND TESTING THE AIR CONDITIONER

If the air conditioner has been in a horizontal position, be certain it is placed in an upright, vertical or mounting position for a minimum of five (5) minutes before operating.

⚠ CAUTION:

Do not attempt to operate the air conditioner while it is horizontal or on its side, back or front. The refrigeration compressor is filled with lubricating oil. This will cause permanent damage to the air conditioner and also voids the warranty.

TEST FOR FUNCTIONALITY **BEFORE** MOUNTING THE AIR CONDITIONER TO THE ENCLOSURE.

Refer to the nameplate for proper electrical current requirements. If cord-connected, connect the power cord to a properly grounded wire power supply. If permanently connected, wire the unit to a properly grounded power supply using copper conductors only. Power supply wiring should be restrained after field installation to ensure no contact with internal fan. Minimum circuit ampacity should be at least 125% of the amperage shown on the unit nameplate. No other equipment should be connected to this circuit to prevent overloading. The air conditioner is rated for operation at 50 and 60 Hz. No action is necessary to adjust the appliance operation at the rated frequencies.

Immediately after applying power, the evaporator blower (enclosure air) should start running. Operate the air conditioner with the compressor running for five (5) to ten (10) minutes. You will need to set the cooling thermostat or controller setpoint below the ambient temperature to operate the compressor.

No excessive noise or vibration should be evident during this run period. Condenser air temperatures should be warmer than normal room temperatures within a few minutes after the condenser impellers start.

See Sequence of Operation on page 22 for specifics on how the unit operates when powered up.

HOW TO READ MODEL NUMBERS

N36	06	2	6	G150
1	2	3	4	5

1. Identifies the type/family of air conditioner and the approximate height (i.e. N36 = Global family about 36 inch high).
2. This is the air conditioner's listed capacity in BTU/Hr. at rated conditions. (i.e. 06 = 6,000 BTU/Hr. at 131/131 F)
3. 1 = 115 Volt, 2 = 230 Volt, 4 = 460 Volt.
4. 6 = 50/60 Hz or 60 Hz only.
5. Unique set of numbers for each air conditioner which identifies the accessories on a model.

INSTALLATION INSTRUCTIONS

1. Inspect the air conditioner and verify correct functionality before mounting the air conditioner. See HANDLING AND TESTING THE AIR CONDITIONER on page 4.
2. Using the cutout dimensions shown in this manual, prepare “IN” and “OUT” openings and mounting bolt hole pattern for enclosures. Select an installation location that will allow for adequate ventilation and clearance for service. Clearance between the air conditioner with or without a supplementary heater and adjacent structures (another enclosure, air conditioner, wall, or combustible surface) must be at least:
   - 24" from front
   - 8" from right side
   - 12" from left side
   - 24" from top
     Local fire codes may have different requirements; please observe applicable regulations for the location of the air conditioner.
     The distance between the air conditioner and the electronic components and other equipment installed inside the enclosure must be at least 3" to ensure adequate air circulation. At minimum clearance levels, an air baffle between the inlet and outlet may be necessary to prevent recirculation.
3. Using the mounting gasket kit provided with the unit, install gaskets to the air conditioner.
4. Mount air conditioner on enclosure using mounting bolts and washers provided to secure unit to enclosure. Take care not to damage the mounting gasket. The mounting gasket is the seal between the air conditioner and the enclosure. Avoid dragging the air conditioner on the enclosure with the mounting gasket attached as this could cause rips or tears in the gasket and risk losing the water tight seal.
5. Allow unit to remain upright for a minimum of five (5) minutes before starting. CAUTION! Air conditioner must be in upright position during operation.
6. Refer to top of the nameplate for electrical requirements. Connect the power cord or wire the unit to a properly grounded power supply following applicable national wiring regulations. Use of an extension cord is not recommended. If the air conditioner is wired to the power supply, the electrical circuit should be fused with a time delay fuse or HACR circuit breaker per the MOPD rating in the Design Data table- see page 22.
7. Some air conditioners require a remote mounted thermostat. Wire the thermostat outputs to the appropriate terminals on the 24 VAC terminal strip by noting the locations on the correct wiring diagram.
8. Set thermostat for required cabinet temperature. Refer to Sequence of Operation on page 22 for thermostat adjustment and operation.

DIMENSION DRAWINGS

N36 Generic Model Drawing with Thermostats

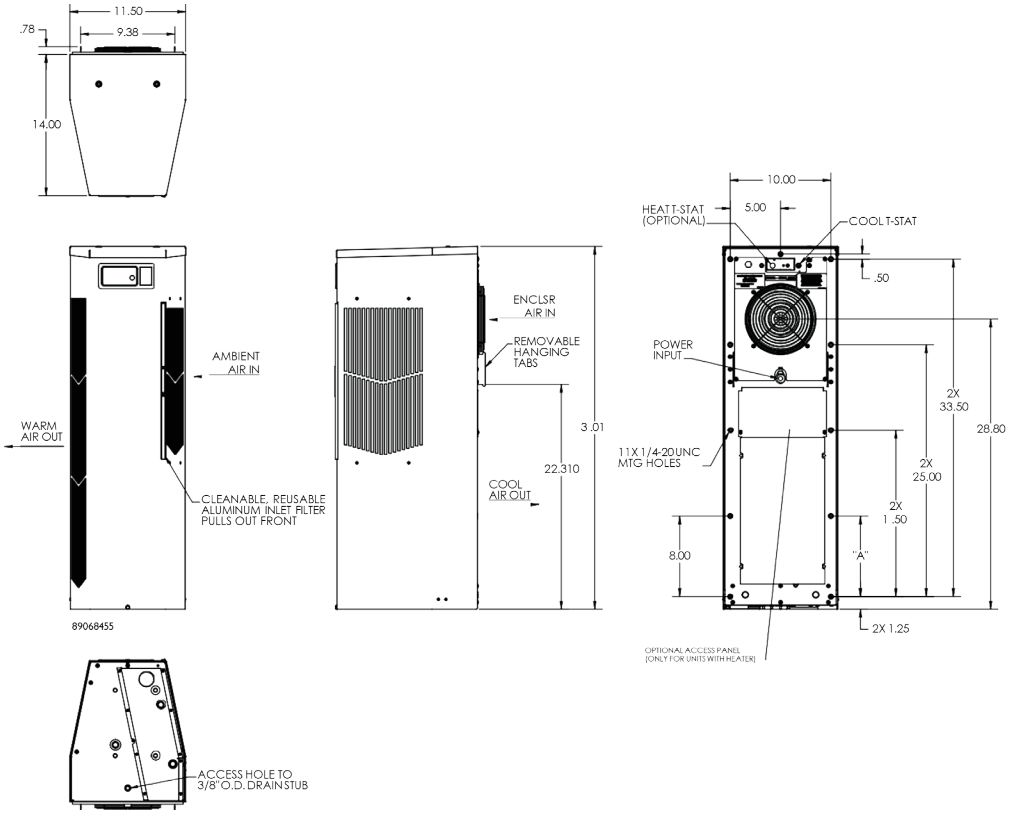

N36 Generic Model Drawing with Remote Access Control

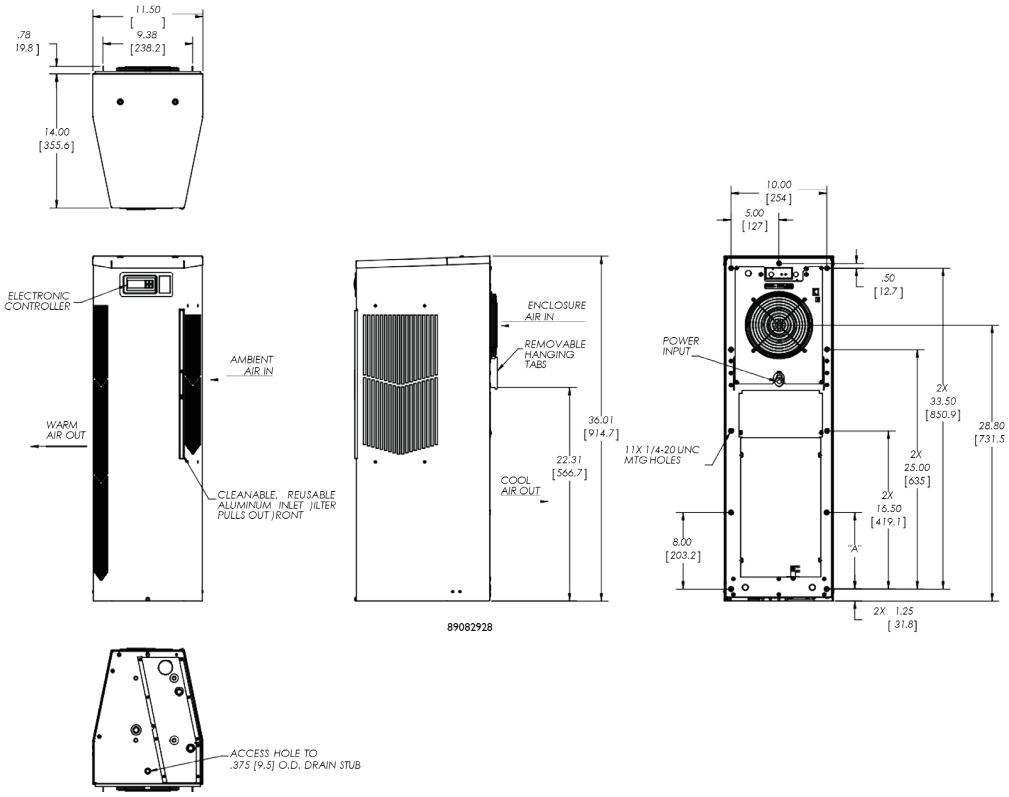

MOUNTING CUTOUT DIMENSION

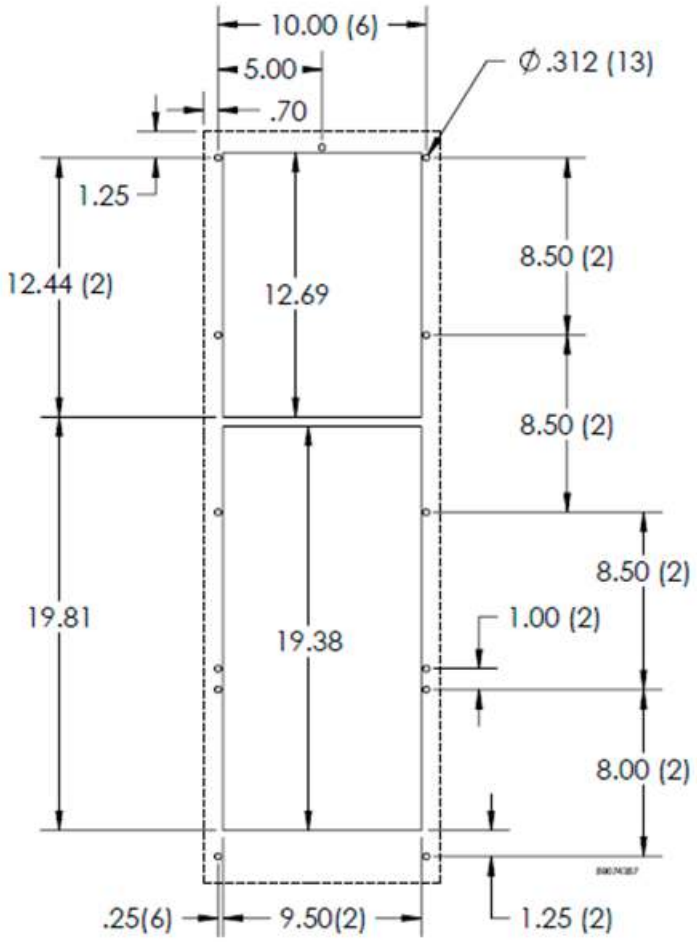

Surface Mount

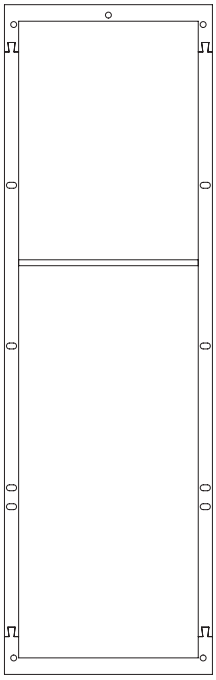

Note: Mounting Gasket Adheres to Air Conditioner.

N36 1-Phase Generic with Thermostat Control Wire Diagram (actual unit options may vary)

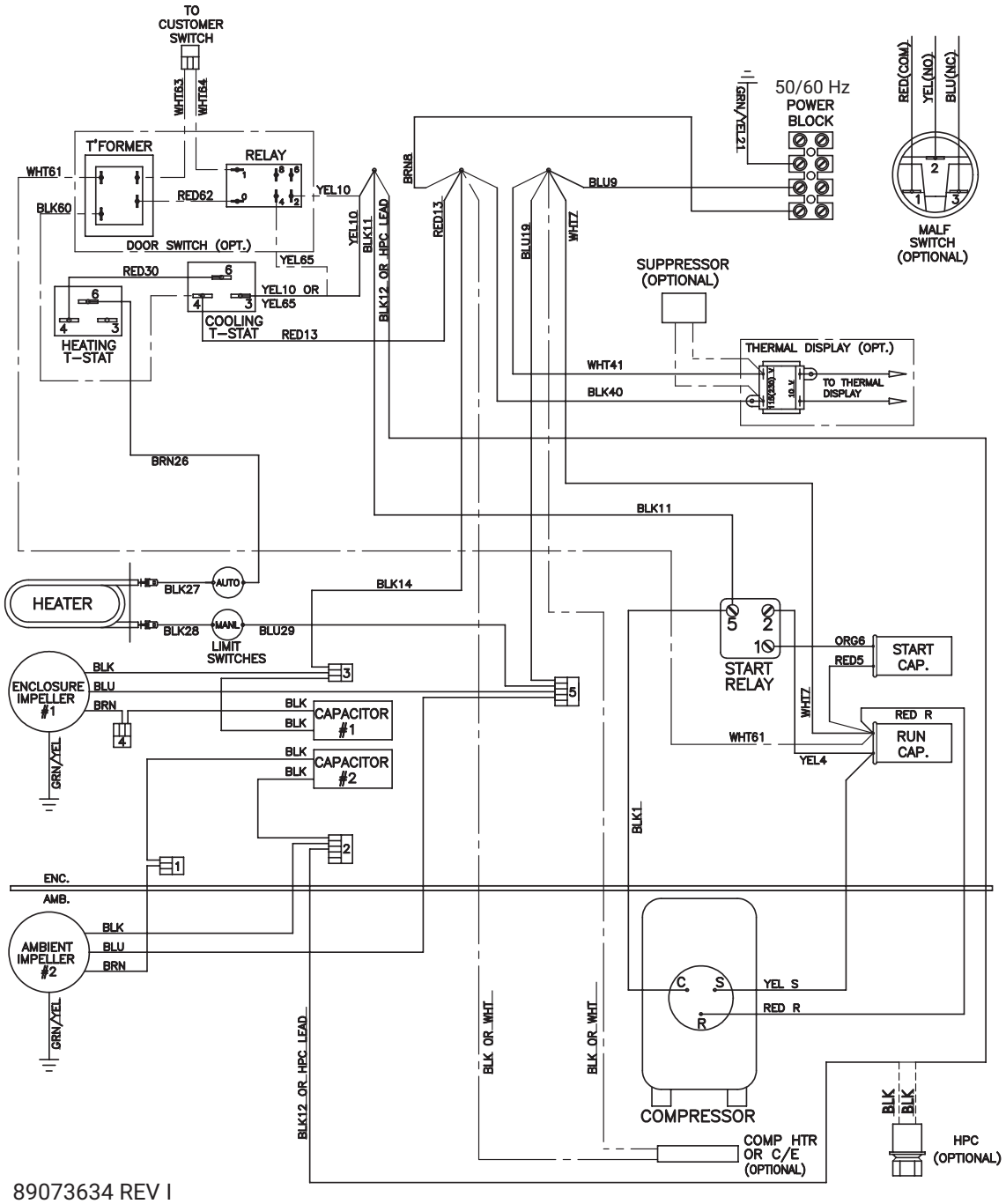

89073634 REV I

N36 1-Phase Generic with Thermostat Control Schematic (actual unit options may vary)

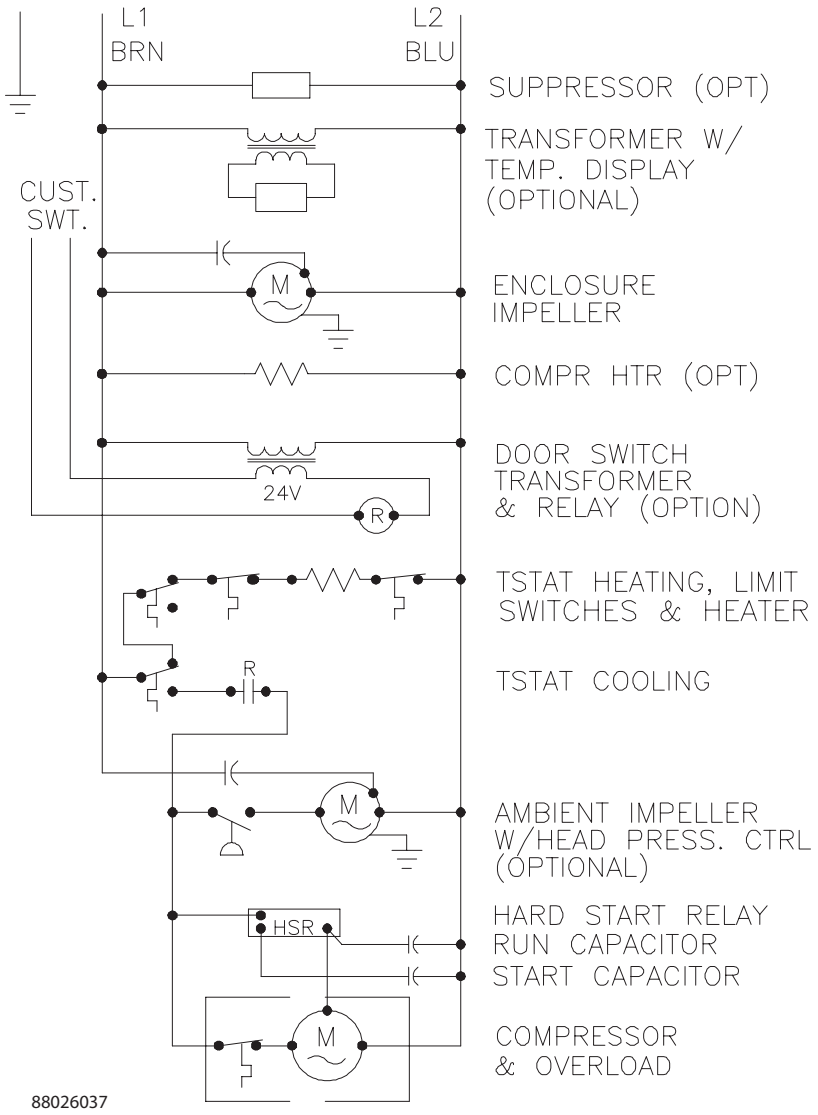

N36 8K BTU 230 V only with Thermostat Control Wire Diagram (actual unit options may vary)

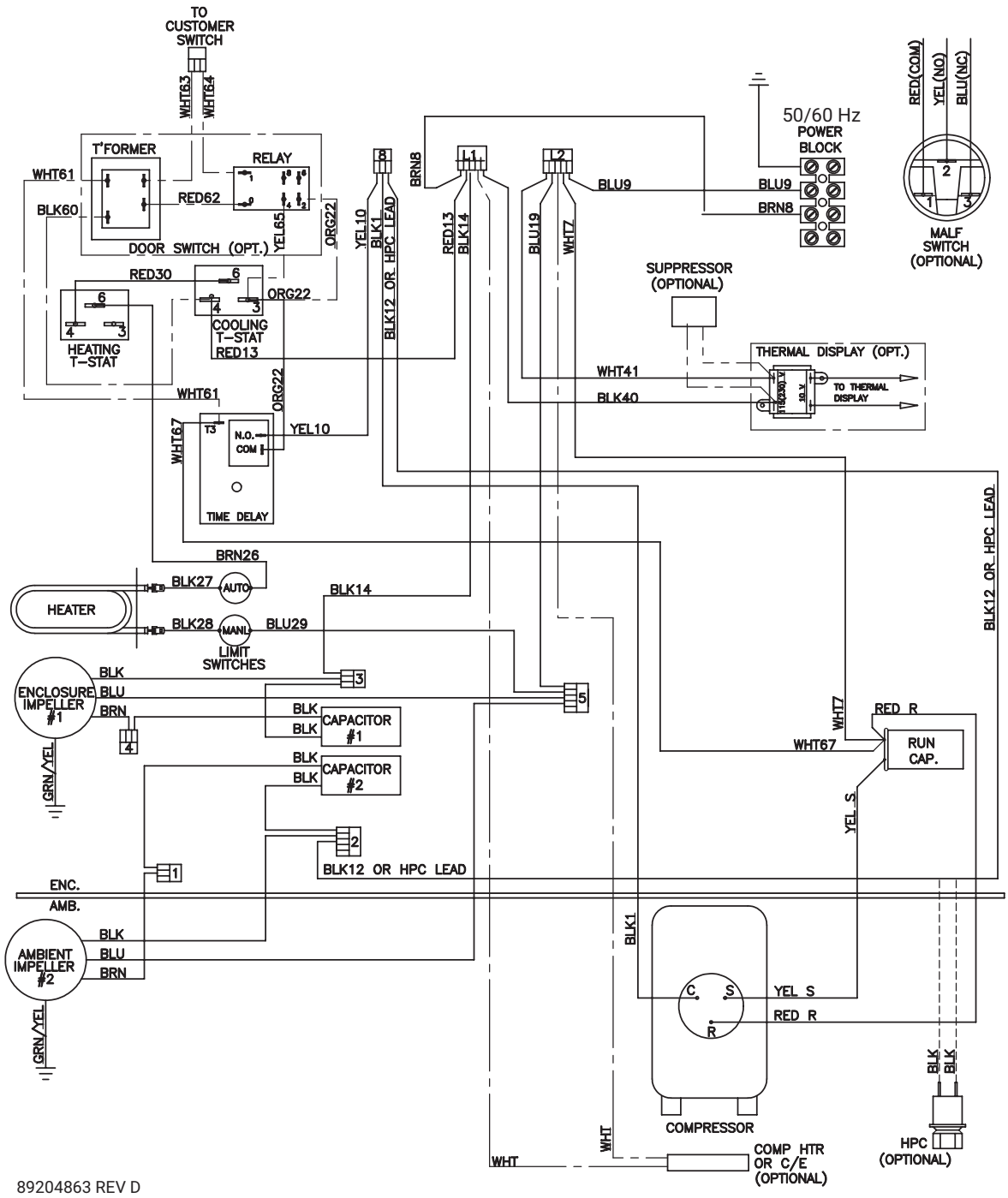

89204863 REV D

N36 8K BTU 230 V only with Thermostat Control Schematic (actual unit options may vary)

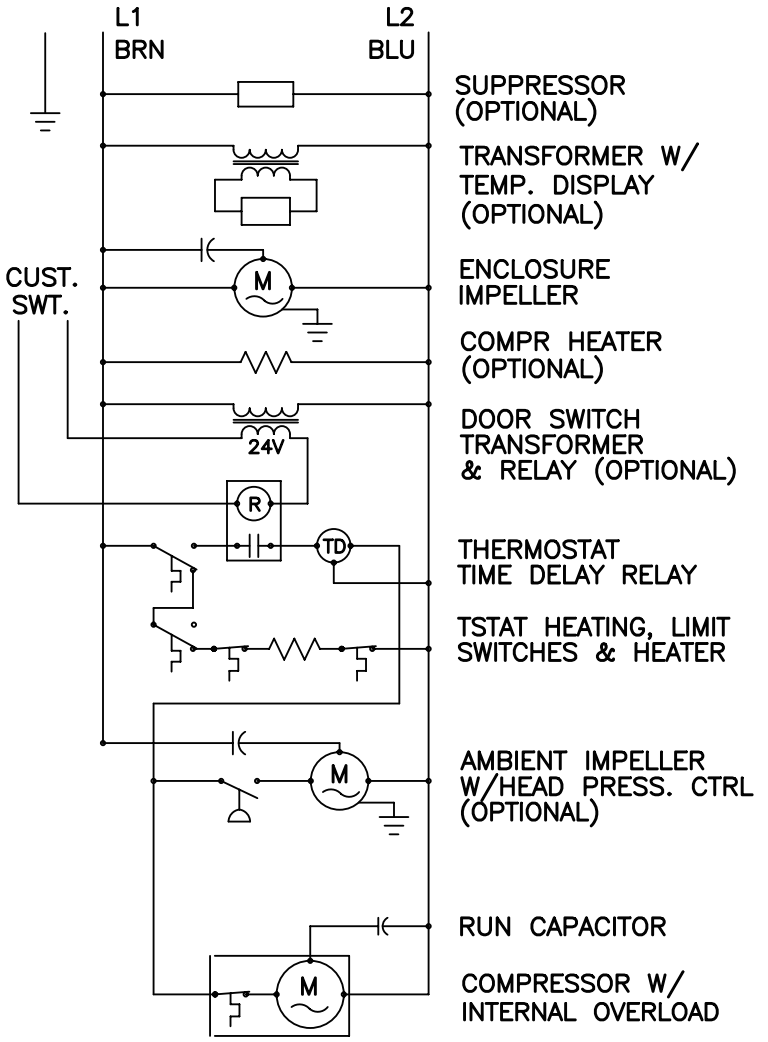

ELECTRICAL SCHEMATIC

89204872 REV A

N36 3-Phase with Thermostat Control Generic Wire Diagram (actual unit options may vary)

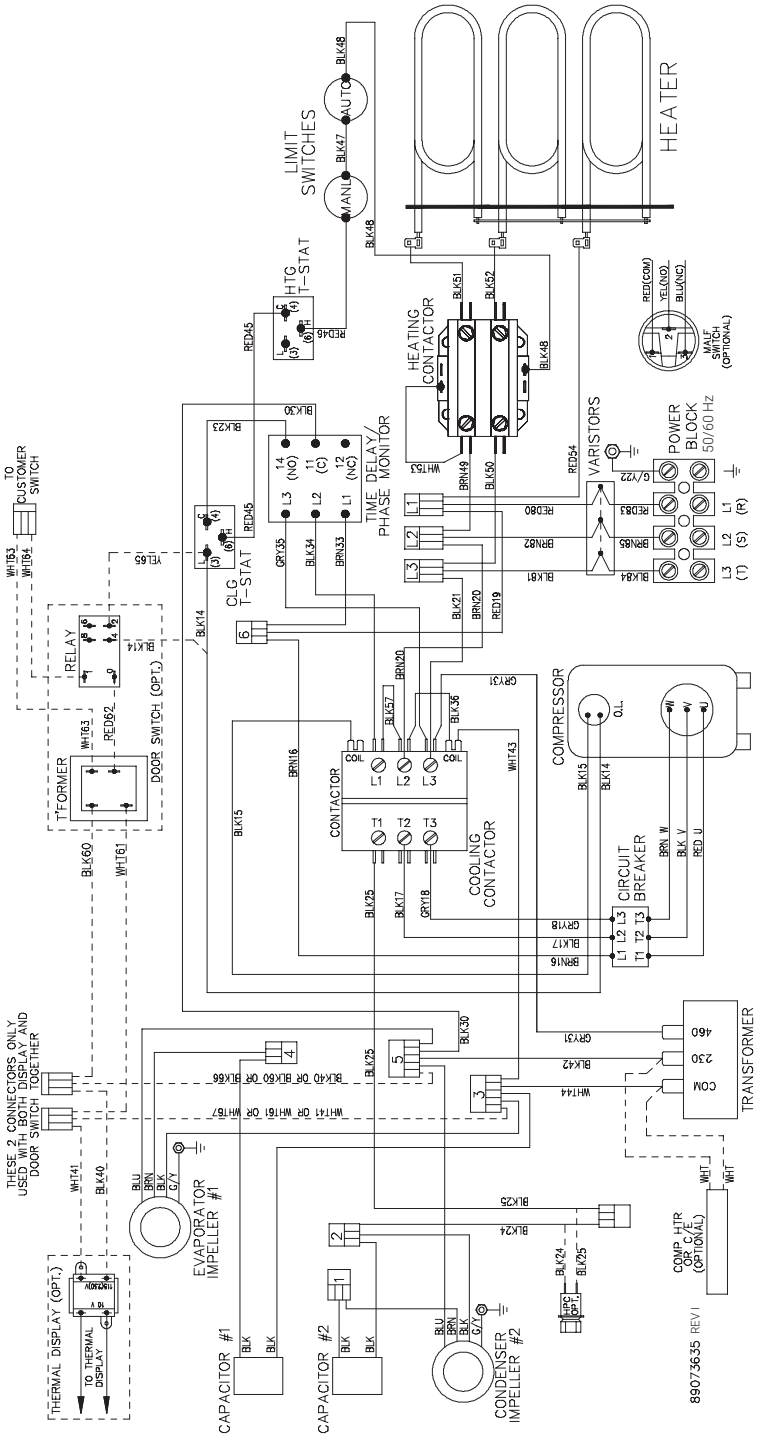

N36 3-Phase with Thermostat Control Generic Schematic (actual unit options may vary)

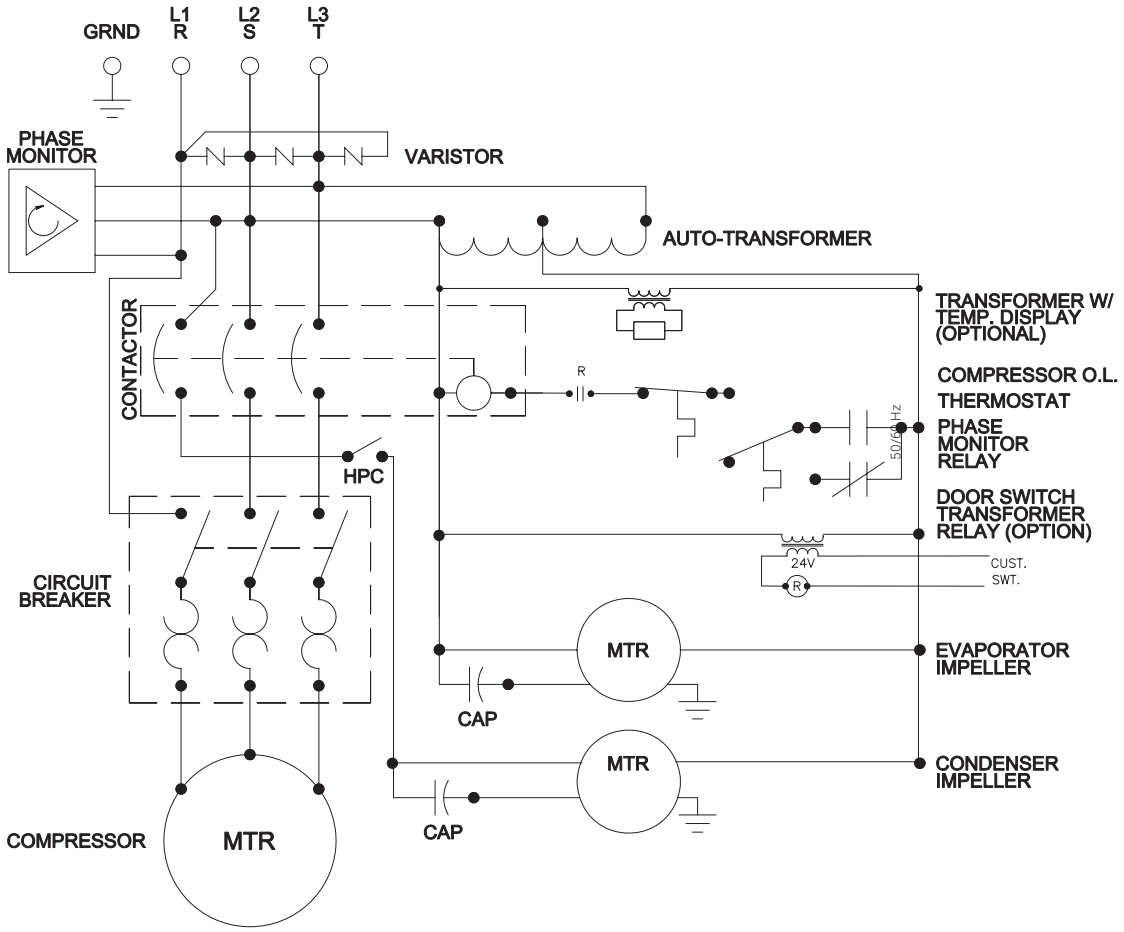

89062969 REV.G

REV I

N36 1-Phase with Remote Access Control Generic Wiring Diagram (actual unit options may vary)

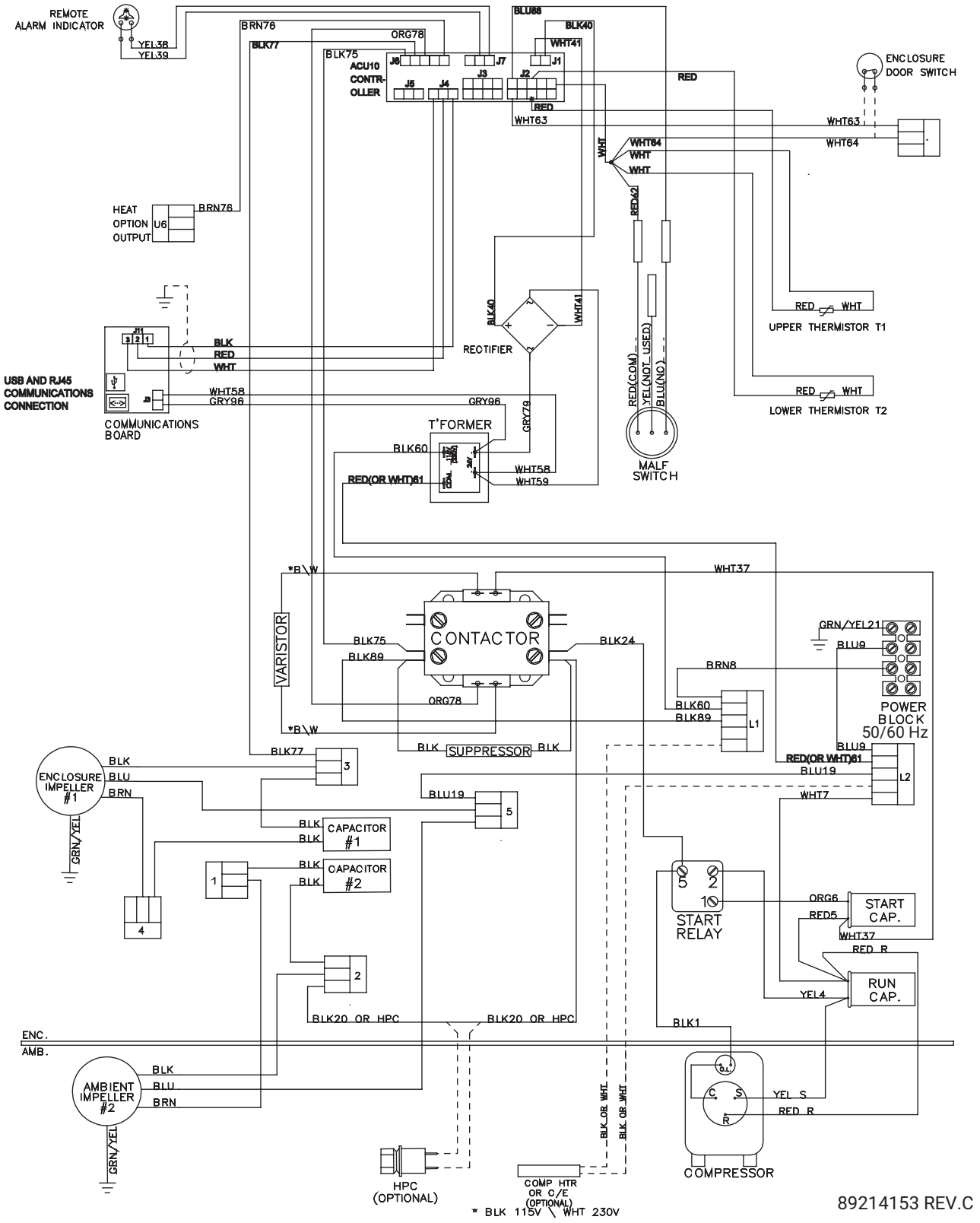

N36 1-Phase with Remote Access Control Generic Schematic (actual unit options may vary)

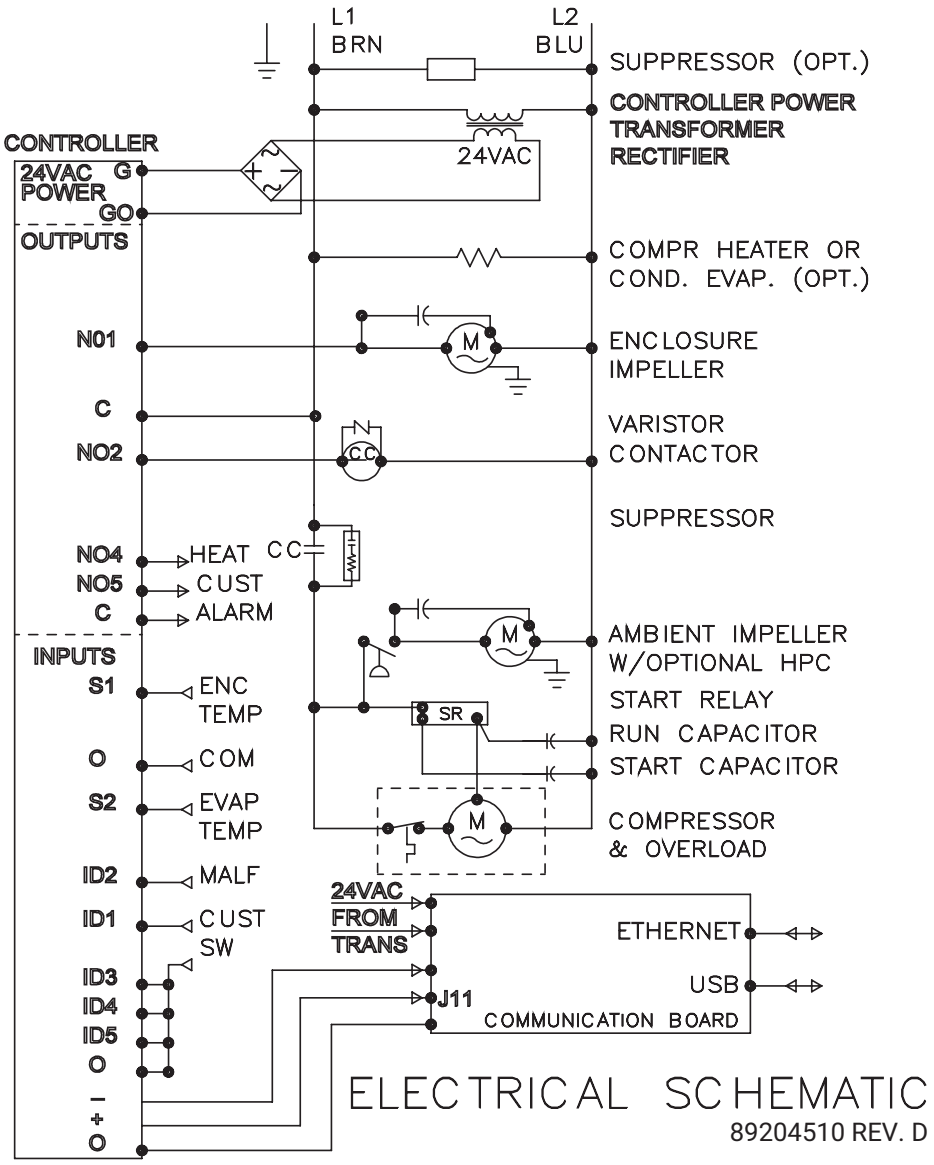

N36 8K BTU 230 V only with Remote Access Control Wire Diagram (actual unit options may vary)

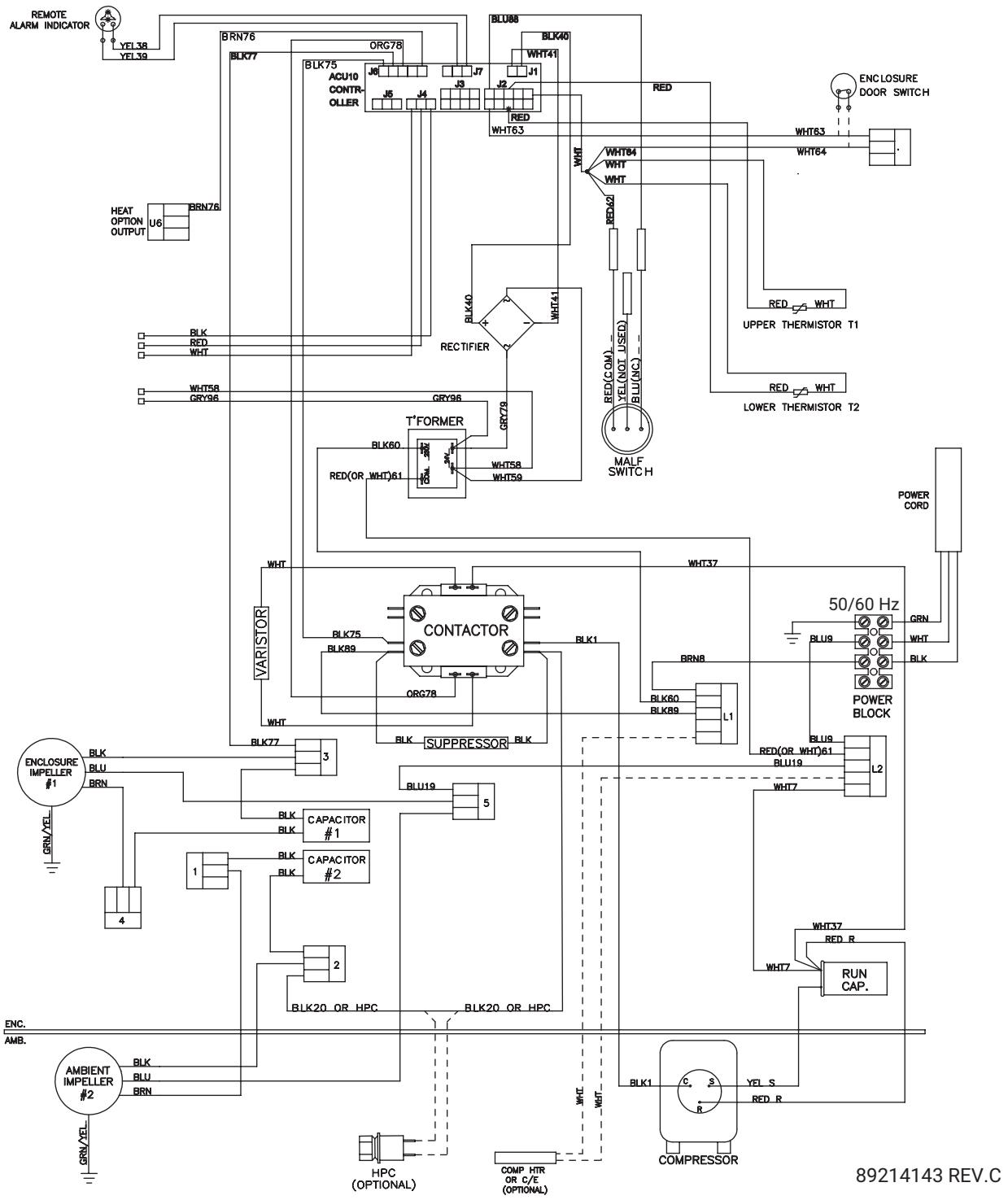

N36 8K BTU 230 V only with Remote Access Control Schematic (actual unit options may vary)

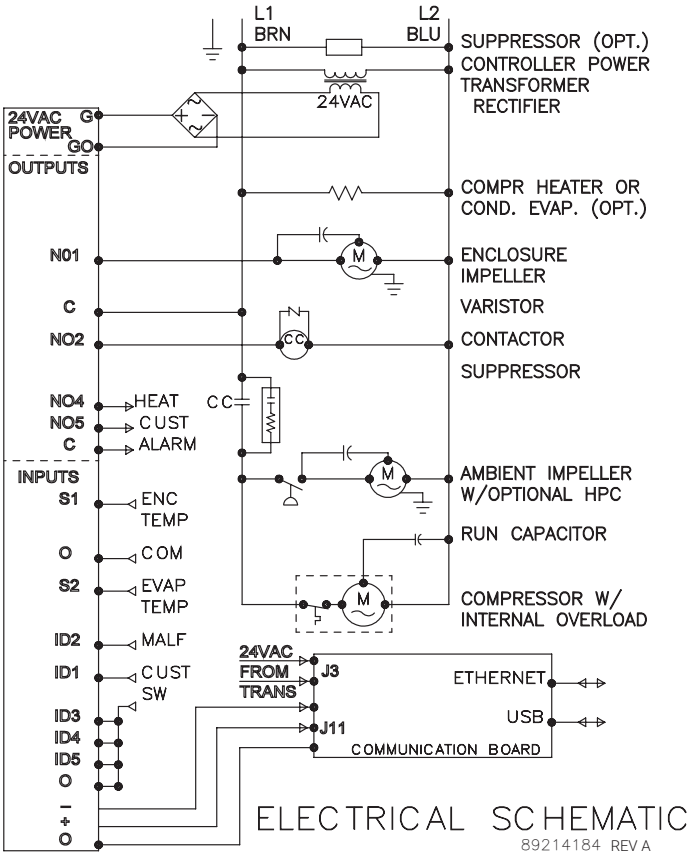

N36 3-Phase Generic with Remote Access Control Wire Diagram (actual unit options may vary)

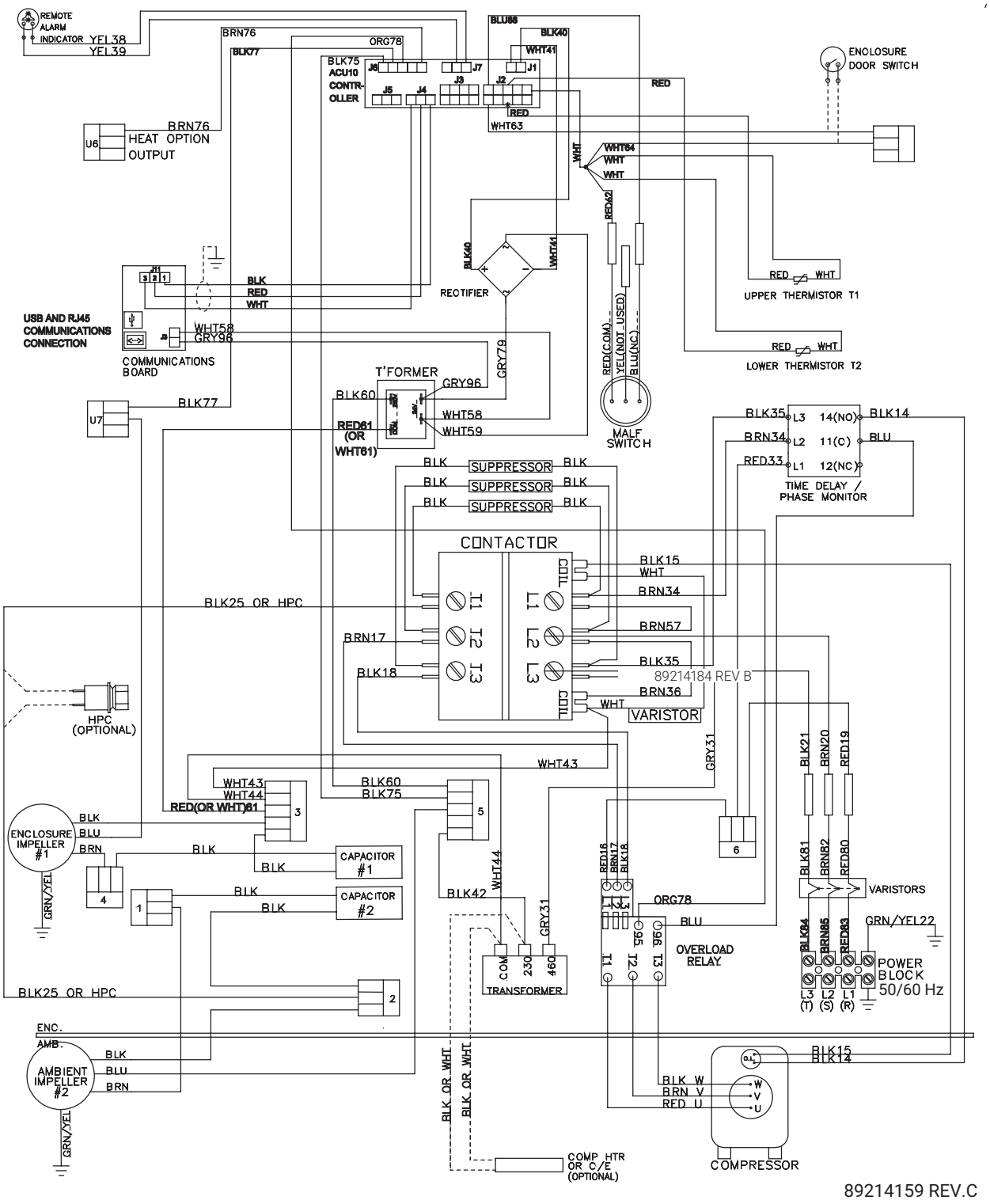

N36 3-Phase Generic with Remote Access Control Schematic (actual unit options may vary)

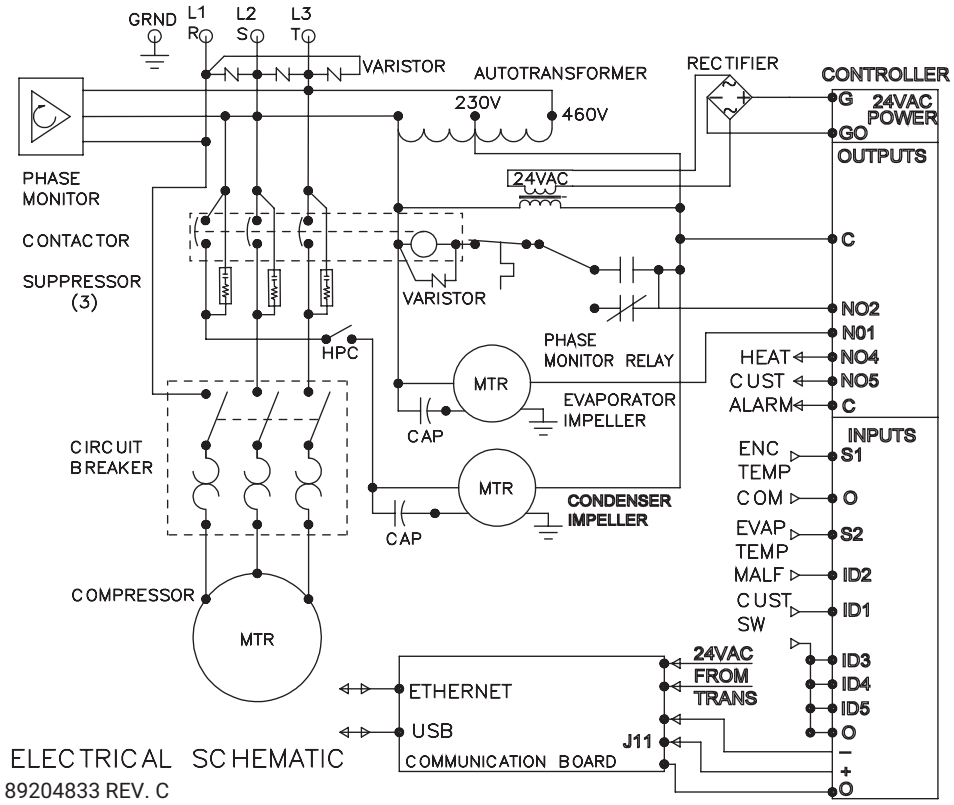

COMPONENTS LIST

Part Description	N360616GXXX 115 Volt 1-Phase 50/60 HZ 6000 BTU	N360626GXXX 230 Volt 1-Phase 50/60 HZ 6000 BTU	N360646GXXX 460 Volt 3-Phase 50/60 HZ 6000 BTU
Capacitor, Compressor Run	89172425SP	89104097SP	N/A
Capacitor, Compressor Start	89173376SP	10103208SP	N/A
Capacitor, Condenser Impeller	52603213SP	52603214SP	52603214SP
Capacitor, Evaporator Impeller	52603213SP	52603214SP	52603214SP
Circuit Breaker, Compressor	N/A	N/A	89098323SP
Coil, Condenser	89068417SP	89068417SP	89068417SP
Coil, Evaporator	89068415SP	89068415SP	89068415SP
Compressor	89169165SP	89169166SP	89243063SP
Contactor, Compressor	N/A	N/A	89102057SP
Impeller, Condenser	101091123SP	101091124SP	101091124SP
Impeller, Evaporator	101091123SP	101091124SP	101091124SP
Overload	89183837SP	89184638SP	N/A
Relay, Compressor Start	89172340SP	89184632SP	N/A
Relay, Phase Monitor	N/A	N/A	89117576SP
Thermal Expansion Valve	10104042SP	10104042SP	89063955SP
Transformer, Input Power	N/A	N/A	10100693SP

Part Description	N360816GXXX 115 Volt 1-Phase 50/60 HZ 8000 BTU	N360826GXXX 230 Volt 1-Phase 50/60 HZ 8000 BTU	N360846GXXX 460 Volt 3-Phase 50/60 HZ 8000 BTU
Capacitor, Compressor, Run	89172425SP	89174772SP	N/A
Capacitor, Compressor, Start	89115350SP	N/A	N/A
Capacitor, Condenser Impeller	52603224SP	52603214SP	52603214SP
Capacitor, Evaporator Impeller	52603213SP	52603214SP	52603214SP
Circuit Breaker, Compressor	N/A	N/A	89098326SP
Coil, Condenser	89176623SP	89176623SP	89068401SP
Coil, Evaporator	89068402SP	89068402SP	89068402SP
Compressor	89169167SP	89169167SP	89169167SP
Contactor, Compressor	N/A	N/A	10100577SP
Impeller, Condenser	101091138SP	101091124SP	101091124SP
Impeller, Evaporator	101091123SP	101091124SP	101091124SP
Overload	89183472SP	N/A	N/A
Relay, Compressor Start	89172340SP	N/A	N/A
Relay, Phase Monitor	N/A	N/A	89117576SP
Thermal Expansion Valve	89074083SP	89074083SP	10104042SP
Transformer, Input Power	N/A	N/A	101006128SP

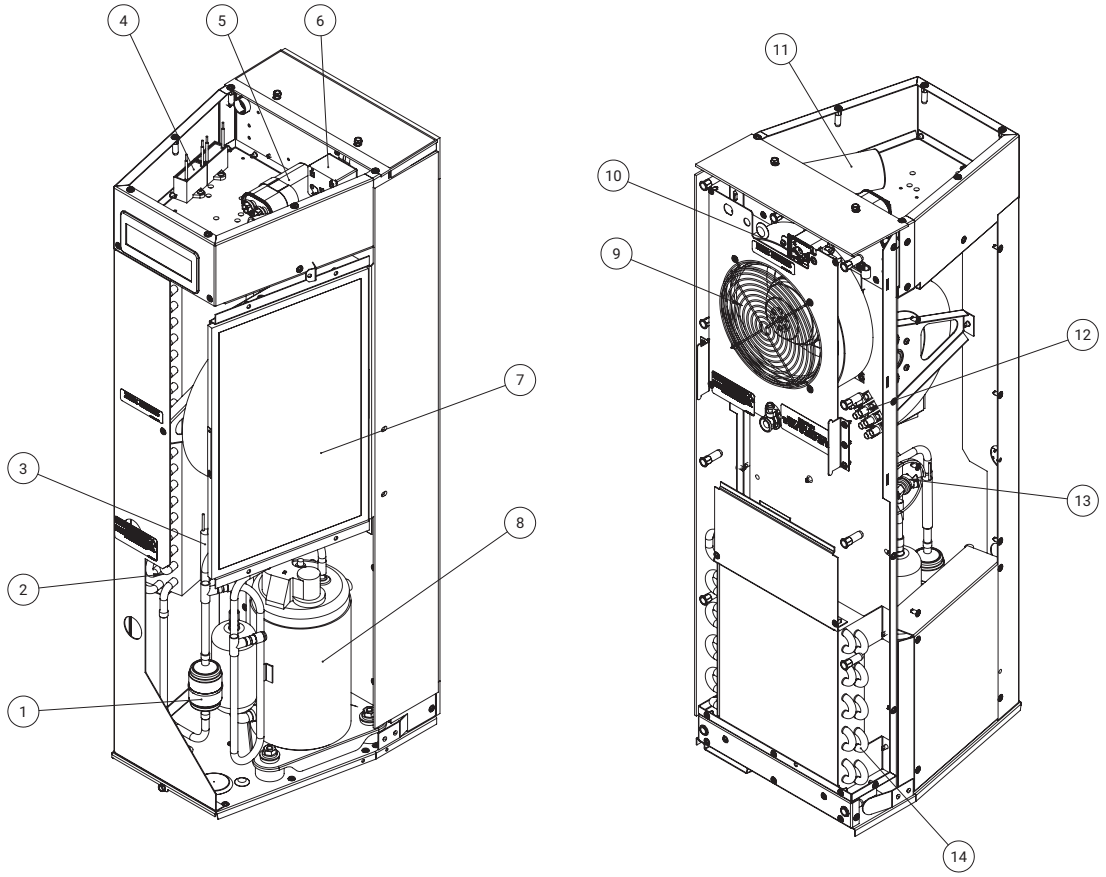

PARTS LIST

Part	Description	Part No.
1	Filter, Drier, Refrigerant	52602800SP
2	Coil, Condenser	See Components List
3	Thermal Expansion Valve	See Components List
4	Capacitor, Condenser Impeller	See Components List
5	Capacitor, Compressor, Run	See Components List
6	Relay, Compressor Start	See Components List
7	Filter, Air, Reusable	89119668SP
8	Compressor	See Components List
9	Impeller, Evaporator	See Components List
10	Thermostat, SPDT, 55-100f	10106116SP
11	Capacitor, Compressor, Start	See Components List
12	Terminal Block	10100306SP
13	Switch, Head Pressure Control	89083016SP
14	Coil, Evaporator	See Components List
15	Gasket, Mounting**	89068471SP

Note: **Mounting gasket not shown

TECHNICAL INFORMATION

Design Data

Model	Voltage	Hz	Phase	MOPD Amps	Full Load Cooling Amps	BTU/HR @ Max Ambient Temperature °F/°C	Max Ambient Temperature °F/°C	Shipping Weight lb/kg
N360616GXXX	115	50/60	1	15	8.6/9.4	5639/6217	131/55	109/50
N360626GXXX	230	50/60	1	15	4.7/5.0	5771/6410	131/55	114/52
N360646GXXX	400/460	50/60	3	15	1.4/1.7	5300/6089	131/55	114/52
N360816GXXX	115	50/60	1	15	9.9/11.6	7074/7754	131/55	114/52
N360826GXXX	230	50/60	1	15	5.1/6.6	7400/8000	131/55	114/52
N360846GXXX	400/460	50/60	3	15	3.0/3.3	7311/7940	131/55	114/52

Note: XXX will be replaced with a three-digit number designating all desired options. Consult factory for specific model numbers.

SEQUENCE OF OPERATION

The air conditioner comes standard with two internally mounted thermostats. There are two modes of operation; heating and cooling. During heating and cooling modes, the evaporator fan will be running.

Heating

When the enclosure temperature is below the heating thermostat setpoint, power is applied to the heaters. When the enclosure temperature is 10 degrees above the setpoint, the heater is powered off.

Cooling

When the enclosure temperature is above the cooling thermostat setpoint, power is applied through the thermostat. The compressor is then energized either directly or through a contactor if unit requires one. The condenser impellers will start immediately if the unit is not equipped with an optional head pressure control switch. If the unit is equipped with an optional head pressure control switch, the condenser impellers will start once the refrigerant pressure reaches the setting of the switch. Component specific information is listed below.

Operating the air conditioner below the minimum ambient temperature or above the maximum ambient temperatures indicated on the nameplate voids all warranties. DO NOT set the enclosure thermostat to a temperature lower than 70°F. Doing so can increase the likelihood of frost buildup on the evaporator coil.

The moisture that the enclosure air can contain is limited. If moisture flows from the drain tube continuously this can only mean that ambient air is entering the enclosure. Be aware that frequent opening of the enclosure's door admits humid air that the air conditioner must then dehumidify.

STANDARD AND OPTIONAL COMPONENT OPERATION

Thermostat

The N36 air conditioner uses our standard 10-1061-16 thermostat. The thermostat setpoint equals the temperature that the air conditioner turns off. The thermostat has a 10 F differential from setpoint until it calls for cooling or heating. An example of operation is shown below.

For Cooling (75–100°F Range):

- Thermostat setpoint = 80°F
- Cooling turns on at 90°F
- Cooling turns off at 80°F

For Heating (55–65 F Range):

- Thermostat setpoint = 55°F
- Heating turns on at 55°F
- Heating turns off at 65°F

Note: For testing purposes only, the thermostat stop screw may be removed (on units so equipped) to allow settings below 70°F. After testing, replace the stop screw and verify that the thermostat cannot be set below 70°F. Extended operation below 70°F can cause coil freeze ups resulting in reduced load and/or unit damage.

Remote Access Control (Optional)

See Remote Access Control (Optional) on page 24.

Head Pressure Control

Unit is set at the factory, no adjustment necessary.

At a saturated condenser temperature of 85°F (95 psig), the condenser fans will power off. At a saturated condenser temperature of 118°F (165 psig), the condenser fans will power on.

Contactor

The contactor on the 1-phase 115 V model uses a 115 V coil (controller option only).

The contactor on the 1-phase 230 V model uses a 230 V coil (controller option only).

The contactor on the 3-phase model uses a 230 V coil (controller option only).

Phase Monitor (N360X46GXXX Only)

This product is equipped with Phase/Voltage Protection. Please verify correct phasing and voltage before operating. Note the fans may still operate if phasing is incorrect, but the compressor will not, so the unit will not cool. Illuminated light on Phase Monitor indicates phase is correct. The phase monitor light can be seen through a small opening on the back of the unit, above the air intake.

If the light is not illuminated, disconnect power from the unit and swap any two power leads at the terminal block. This should correct the phasing. The light should now illuminate when power is reapplied.

460 V TO 230 V Transformer (N360X46GXXX Only)

The 230 V from this transformer powers the fans, contactor and optional transformers. 460 V is only used to run the compressor.

115/230 V TO 10 V Transformer (Optional)

This transformer powers the temperature display only.

115/230 V TO 24 V Transformer and Relay (Optional)

The transformer and relay are used to operate the condenser blower and compressor by using a customer supplied, remote mounted door switch. This is not a safety door switch, but rather, only helps to reduce condensation at the evaporator coil if the door is opened. The unit will remain electrified when the door switch is operated with the evaporator fan continuing to operate, and potentially, if temperatures are low enough, the heater may continue to operate on outdoor models.

REMOTE ACCESS CONTROL (OPTIONAL)

Overview

The digital thermostat (controller) is a parametric controller for the complete management of air conditioners. All settings are pre-programmed at the factory. Cooling/heating setpoint, cooling/heating differential and high/ low temperature setpoint are designed to be adjustable by the operator. All alarms are outputted through the alarm relay. In addition, if nVent HOFFMAN network card (Remote Access Control (RAC) Module) is used the parameters that state above and alarms are accessible remotely through Ethernet connection utilizing SNMP, Modbus TCP, EtherNet/IP, and Profinet protocol. A USB connection from the network card is also provided with accessibility to the digital thermostat controller utilizing Modbus RTU and RS-845 serial bus. In addition, the USB connection is also used to read the network information from the nVent HOFFMAN network card and temperature setpoints and alarm from the controller. Note that nVent HOFFMAN network card (RAC module) is acting as a gateway to the digital thermostat where temperature setpoints and alarm can be viewed and/or changed remotely.

Note: nVent HOFFMAN network card (RAC module) is an optional accessory, therefore, some of the air conditioners ship without the network card but it is upgradable upon request.

Energizing the Controller

The digital controller is wired and programmed at the factory to operate when power is applied to the air conditioner. In normal condition, the evap fan starts operating after the completion of the self-evaluation which is less than 30 seconds and fan icon should be illuminated along with the inlet and outlet temperature data (if an option outlet temperature sensor is installed).

Control Status Indication

The display has numerous symbols to indicate the various controller functions such as cooling, heating, alarming, evaporator fan, and heating. Indicators (icons) are steady illuminated on screen when active.

Keypad

Symbol	Color	Icon Indication	Icon Status
	Red	Alarm – active when alarm is detected	Flashing when alarm is detected
	White	Keypad **Select** – access to passcode, hold 5 sec to turn unit ON/OFF, parameter menu, parameter setting, write or save to EEPROM, and hold for 3sec to return to main screen	ON
	White	Keypad **Up** – navigate to previous parameter and increasing parameter variable	ON only when reviewing parameters
	White	Keypad **Down** – navigate to next parameter and decreasing parameter variable, all inputs, unit status.	ON

Main Field

Symbol	Color	Icon Indication	Icon Status
°C	White	When operating temperature in degrees Celsius	ON
°F	White	When operating temperature in degrees of Fahrenheit	ON
Main Field Line 1	White	Display inlet temperature	ON
Main Field Line 2	Orange	1. Display outlet temperature in standalone mode if outlet sensor is present 2. Displays device ID for primary-secondary mode up to 10 units, 1:10 … 10:10 or lead-lag mode up to 2 units, 1:2… 2:2	ON

Icons

Symbol	Color	Icon Indication	Icon Status
	White	Compressor Running	• Flashing while waiting for compressor to turn ON • Steady ON while compressor is running
	White	Evaporator Running	ON
	White	Electric heater ON	ON
	White	Primary and/or lead controller	ON
	White	Freeze control	Compressor and Condenser fan OFF while illuminated
	White	Power ON	ON

Home Screen
Inlet Temp
Outlet Temp
Evap fan icon
Compressor icon
Heater icon
Unit of measure
Power ON icon
Program
Read ID & Sensor
S1 Inlet Sensor
S2 Outlet Sensor
ESC Escape

Passcode Screen	
PSd	0002 or 0022
ESC	Escape

Passcode 0002	
ALrF	Alarm Folder
AHiF	Alarm History Folder
PArF	Parameter Folder
rtCL	Real Time Clock Folder
rStF	Reset
UnF	Unit of Measure (°C or °F)
FrF	Firmware Revision Folder
LOG Out	Log Out of program mode

ArOP	Alarm Relay Output Setting
dO	Door Open Alarm Setting
Ht	High temperature alarm setpoint
Lt	Low temperature alarm setpoint
rH	Relative Humidity alarm setpoint
ESC	Escape

CSt	Cooling Setpoint
Cd	Cooling Differential
Cd2	Cooling Differential 2
HSt	Heating Setpoint
Hd	Heating Differential
H25	Internal Buzzer Configuration
ESC	Escape

t01	Unit of hour
t02	Unit of minute
t03	Unit of year
t04	Unit of month
t05	Unit of day
SET	Save
ESC	Escape

rSAL	Reset or Clear alarms
rSPA	Reset parameters to default
ESC	Escape

H13	°C = 0; °F = 1
ESC	Escape

Fr	Firmware revision
ESC	Escape

DISPLAYING AND CHANGING PROGRAM SETTINGS

To view or access the settings

To access folder menus:

1. Press button to display passcode screen, the screen displays **PSd** on line 1 and **0000** on line 2.
2. Press button to access to passcode, the first digit of **0000** is flashing and press 3 more times until the last digit of **0000** flashes.
3. Press arrow two times to change the 0 to 2. Press for access to folder menus.

Note: to exit the security level to the main screen wait one minute with no action or Press arrow until **LOG Out** message displays, then press button.

To change a parameter setting

1. Once in the folder menu navigate to the desired setting to be changed using the arrow to scroll and button to access a menu or parameter.
2. To change a parameter Press button and parameter value will begin to flash.
3. Press / arrow to the desire value.
4. Press button to save the setting and the screen will revert to the parameter mnemonic.

Note: if button is not pressed, the new setpoint is not saved.

To exit the parameter settings to the main screen wait one minute with no action or Press arrow few times until **ESC** displays, then press button to return to **UoF** screen. From the **UoF** screen Press arrow few times until **LOG Out** message displays, then press button to return to the main screen.

Selecting **ESC** returns to folder menu.

Selecting **LOG Out** returns to main screen.

Heat/cool operating parameters

Mnemonic Parameter	Description	Default Value	Range
CSt[1]	Cooling setpoint	80°F	72°F to 120°F
Cd (Cd1)[1]	Cooling differential	7°F	2°F to 25°F
Cd2[4]	Cooling differential 2	15°F	–
HSt[2 3]	Heating setpoint	50°F	45°F to 60°F
Hd[3]	Heating differential	7°F	2°F to 25°F

[1] Compressor or cooling turns ON at CSt + Cd and OFF at CSt
[2] Heater or heating turns ON at HSt and OFF at HSt + Hd
[3] Heating mode is only applied to a unit with heater option
[4] Cooling differential 2 is only applied to 2-stage compressor and lead-lag application

Alarm parameters

Mnemonic Para	Description	Default value
Ht	High temperature alarm setpoint	125°F
Lt	Low temperature alarm setpoint	40°F
dO	Door open alarm setting	NC
ArOP	Alarm relay output	NO

Note: (4) The alarm relay output logic is designed to be configurable

View alarms

Alarms may be viewed when the alerting icon ⚠ is flashing.

1. On the main screen, press the alerting icon ⚠ button
2. The screen displays the most recent or newest alarm where the alarm code display on line 1 and the alerting icon ⚠ is now in steady
3. Press ↑ arrow to view next alarm if there are more than one
4. Press ↓ arrow to display **ESC**, then press ◎ button to return to the main screen

View the alarms in the alarm history folder

1. Follow instructions above to enter the passcode and open the alarm history folder **(AHiF)**.
2. Press ◎ button to access to the alarm history.
3. Press ↓ arrow to display the mnemonic alarm on line 1 and time, month, and day display on line 2. For example, low temp alarm **(Lt)** displays on line 1 and 09:24 and 0706 display on line 2 in sequence. Note that the time, and date recorded in the alarm history is based on the local real-time-clock if configured after installation.
4. Press ↓ arrow to view next alarm. The controller is able to retain up to 25 events
5. Press ↑ ↓ arrow until the screen displays **ESC**, then press ◎ button to return to the main screen or if no action for longer than 60 seconds the screen will be automatically revert to the main screen.

Note: if no alarms are present then only **ESC** will be displayed in the folder.

There are seven possible alarms (non-latching) detectable by the controller and are indicated on the controller display. All alarms are accessible locally. If a nVent HOFFMAN network card (RAC module) is used, alarms are also accessible remotely through the Ethernet and USB connection.

Mnemonic Alarm	Description	Cause	Result	Alarm Relay Output
dO	Door open alarm	Enclosure door opens or not properly close	Compressor and evap fan turn OFF in duration of alarm	Closed
S1F	Inlet temperature sensor fault	Inlet temp probe failed	No effect on function, controller continue operating as normal using outlet sensor with setpoint of 50°F	Closed
S2F	Outlet temperature sensor fault	Outlet temp probe failed	No effect on function but loss freeze protection	Closed
LA	Malfunction alarm	MALF high pressure switch opens	No effect on function	Closed
Ht	High temp warning	Enclosure air exceeds high temp alarm setpoint	No effect on function	Closed
Lt	Low temp warning	Enclosure air drops below low temp alarm setpoint	No effect on function	–
FA	Frost alarm	Evaporator coil freezes	Compressor and condenser fan turns OFF for the duration of alarm. Alarm clears when the outlet temperature sensor reaches 59°F	Closed

To reset the alarms in alarm history folder

The controller is designed with ability to reset or clear the alarm history

1. Follow instructions above to enter the passcode and open the reset folder **(rStF)**.
2. The screen displays **rSAL** on line 2 and **nO** on line 1, press button the **nO** is flashing
3. Press arrow to change **nO** to **YeS**, then press button reset the alarms. The screen flashes once and returns to **rSAL** with **nO** one line 2
4. Press arrow to navigate to **ESC**, then press to returns to **rStF** screen.
5. Press arrow to navigate to **LOG Out**, then press button to return to the main screen or if no action for longer than 60 seconds the screen will be automatically reverted to the main screen.

To reset parameters to factory default

This option is ONLY applied if the operator wants to reset all control parameters back to factory default.

1. Follow instructions above to enter the passcode and open the reset folder (rStF).
2. The screen displays rSAL, press arrow to navigate to rSPA and then press button
3. The screen displays rSPA one line 1 and the word nO on line 2 in steady state, press button and then the word nO is flashing and ready to change
4. Press arrow to change nO to YES. Press button the screen displays PSd with 0000 on line 2
5. Press button to enter to passcode. Press button few times until the last digit of 0000 flashing
6. Press arrow to change 0 to 2, press button to authorize the reset of the parameters
7. The screen returns to rSPA screen in steady state.
8. Press arrow to navigate to ESC, then press to returns to rStF screen.
9. Press arrow to navigate to LOG Out, then press button to return to the main screen or if no action for longer than 60 seconds the screen will be automatically reverted to the main screen.

Displaying temperature data on screen

There are two temperature probes in the air conditioner where one is reading the enclosure air temperature incoming to the air conditioner and other is reading the cooled air leaving the air conditioner and entering the enclosure. Both temperature data are displayed on the screen where line 1 is the reading of the inlet temperature and line 2 is the reading of the outlet temperature.

Compressor restart time delay

A factory set 3 minute (180 seconds) restart delay exists to reduce residual back pressure before allowing the compressor to restart. The compressor will stay off for the entire restart duration after the compressor is disabled. A flashing compressor icon on the display indicating that the unit is in a compressor restart delay mode while calling for cooling or waiting for compressor to turn ON.

Alarm output contact

The digital controller has a normally open dry contact alarm output with a resistive load rating of 250 VAC @ 5 amps max. The two yellow 18 AWG wires located at the back of the air conditioner provide a connection to this output. **Note: do not apply power to this normally open dry contact (two yellow 18 AWG wire).** This alarm relay output is configurable and provides user with the ability to change the configuration to support their external device. Parameter C21 controls the alarm relay output logic and can be accessed through security code “0022” in the PArF folder.

Para	Description	Configuration
C21	Alarm relay output logic	0 = normally open (NO) – factory default 1 = normally closed (NC)

Alarm input connection

The digital controller can accept a dry contact/switch input via the two 18 AWG white wires located at the back of the air conditioner. This input is associated with the controller display alarm mnemonic dO (door open). To use this feature, remove the splice connector, and connect the two white wires to customer supplied enclosure door switch in its place.

Note: do NOT apply power to this dry contact input.

Primary-secondary (PS) mode

Note: during normal operation, in both the primary-secondary (PS) and lead-lag (LL) operating modes, line 2 displays the device ID, not the outlet temperature. The outlet temperature can be viewed on line 1 by pressing ↓ arrow.

Primary-secondary (PS) mode shares the same hardware and source code as standalone mode, but offers more functionality and features. The controller ships from the factory in Standalone Mode. PS mode is configured manually in the field after the installation. This option allows the user to operate the air conditioner in a group network with up to 10 units. To support PS mode, three parameters, **H01**, **H02**, and **H03** need to be configured. **H01** specifies the operating mode, **H02** specifies the device ID, and **H03** specifies the total number of the units in the group network.

Before configuring to operate in PS mode, the user should understand the functionality of the PS mode.

1. In the PS mode, all units operate off the cooling/heating setpoint and differential of the primary unit. The system prevents setpoint changes from secondary units.
2. The primary unit monitors the enclosure temperatures of all the units and manages the ON/OFF status of cooling and heating based on the unit reporting the highest temperature.
3. When cooling is initiated the primary unit energizes first. Secondary units are energized sequentially at 10 second intervals. When heating is initiated all units turn on heat together. When cooling or heating is satisfied all units turn off together.
4. If the number of units communicating on the network doesn't match the value in H03 then the primary unit will display alarm LC, and the secondary units will display alarm LC1 until the communication re-established.
5. Any unit that loses communication with the primary unit will enter standalone mode and continue operating based on its own temperature probe until communication is re-established.
6. All temperature setpoints and alarms can be viewed remotely if one of the ACUs is equipped with nVent HOFFMAN network card (RAC module).
7. Best recommendation is to configure the ACU that has nVent HOFFMAN network card to be the primary one.

Connecting units together in primary/secondary mode

Primary - Device ID 1 | Secondary - Device ID 2 | Secondary - Device ID 3 | Secondary - Device ID 10

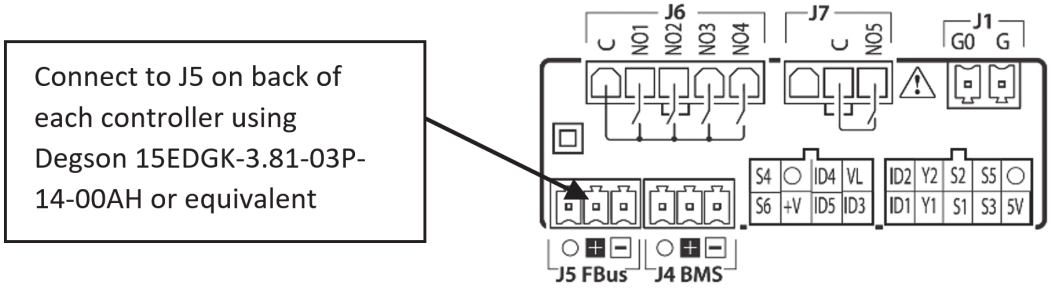

To configure the controller from single mode to PS mode, simply follow below procedures

1. Before proceeding the PS mode configuration for each controller, make sure that the communication cable is connected from one ACU to another using a shielded cable with the shield grounded.
2. Press button to display passcode screen, the screen displays **PSd** on line 1 and **0000** on line 2.
3. Press button to access to passcode, the first digit of 0**000** is flashing and press 2 more times until the third digit 0000 flashes. Press arrow two times to change **0** to **2**, then press button to move to the last digit **002**0
4. Press arrow two times to change the 0 to 2.
5. Press button to access to folder menu and then, the screen displays **ALrF**
6. Press arrow to navigate to **PArF**, then press button to access to parameter menu
7. The screen displays **C**, press arrow to navigate to parameter **H** and then, press button to access to parameter **H** menu

Parameter	Description	Available Range	PS Settings	Default
H01	Mode	SA (stand alone) PS (primary-secondary) LL (lead-lag)	PS (primary-secondary)	SA
H02	Device ID	1 up to 10	1 up to H03	1
H03	Total number of the units in the group network	1 up to 10	2 up to 10	1

8. Set parameter **H01** to **PS** (primary-secondary).
   Note: that after **H01** = **PS**, the snowflake icon is illuminated and line 2 changes its display information from outlet temperature to device ID, for example, line 2 displays **01:02** where 01 indicates controller #1 and 02 indicates the total number of the controllers in a group network. Keep in mind that the snowflake icon only illuminates on primary controller.
9. Set parameter **H02** (device ID) to 1 to 10. This device ID will be different for each controller that is connected. The controller set to 1 will be the primary controller. Use numbers sequentially and don't skip using a number.
10. Set parameter **H03** (total number of controllers connected) to 1 to 10.

Connecting units together in lead/lag mode

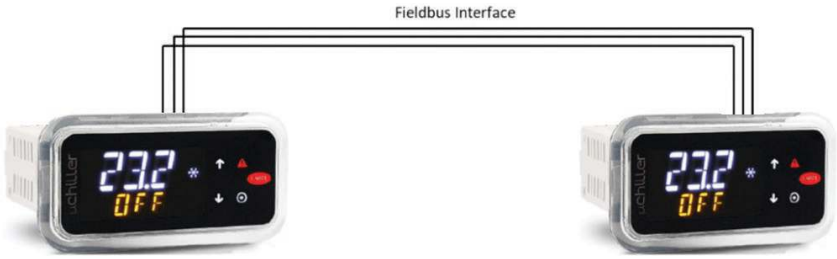

Lead - Device ID 1

Lag - Device ID 2

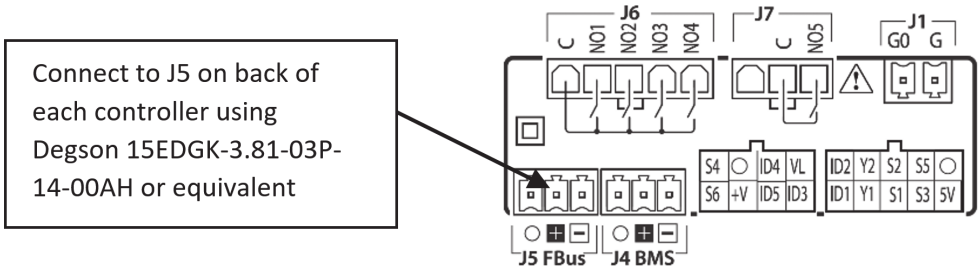

To configure the controller from single mode to LL mode, simply follow below procedures. Perform this configuration for both air conditioner.

1. Before proceeding the LL mode configuration for each controller, make sure that the communication cable is connected from one ACU to another using a shielded cable with the shield grounded.
2. Press button to display passcode screen, the screen displays **PSd** on line 1 and **0000** on line 2.
3. Press button to access to passcode, the first digit of 0**000** is flashing and press 2 more times until the third digit **00**0**0** flashes. Press arrow two times to change **0** to **2**, then press button to move to the last digit **002**0.
4. Press arrow two times to change the 0 to 2.
5. Press button to access to folder menu and then, the screen displays **ALrF**.
6. Press arrow to navigate to **PArF**, then press button to access to parameter menu.
7. The screen displays **C**, press arrow to navigate to parameter **H** and then, press button to access to parameter **H** menu.

Parameter	Description	Available Range	LL Settings	Default
H01	Mode	SA (stand alone) PS (primary-secondary) LL (lead-lag)	LL (lead-lag)	SA
H02	Device ID	1 up to 10	1 or 2	1
H03	Total number of the units in the group network	1 up to 10	2	1
H14	LL strategy selection	0–250	0 (Alternate each cycle) 1–250 (Alternate hours)	0

8. Set parameter **H01** to **LL** (lead-lag).
9. Set parameter **H02** (device ID) to 1 for one unit and 2 for the other unit.
10. Set parameter **H03** (total number of controllers connected) to 2.
11. Set parameter H14 (LL strategy selection) to 0 to 250. This is the run time in hours before ACU1 and ACU2 will alternate being the lead unit. When set to zero ACU1 and ACU2 will automatically alternate every cycle.

AIR CONDITIONER UNIT REMOTE COMMUNICATION FEATURES

Air conditioners that include the optional nVent HOFFMAN network card (RAC module) have remote communication capabilities utilizing SNMP, Modbus TCP, EtherNet/IP, Profinet Protocol via Ethernet connection, and Modbus RTU protocol via USB connection. nVent provides Windows interface application software that is available to download free from nVent support link https://www.nVent.com/en-us/HOFFMAN/remote-access-control. The Windows interface application software supports both Ethernet and USB communication.

USB communication

This communication mode allows direct connection from a laptop (or PC) to the air conditioning unit using a Mini-b USB cable. As stated above, Modbus RTU is used to communicate between the two devices via USB connection.

Ethernet communication

This communication mode allows remote connection to the air conditioning unit utilizing SNMP, Modbus TCP, EtherNet/IP, and Profinet protocol. Customers that use their own software can download an MIB file for SNMP, EDS or EtherNet/IP Object file for EtherNet/IP, Coil Register file for Modbus TCP, and Data Point for Profinet.

Note: the Ethernet card (RAC module) has a default IP Address of 192.168.1.2

Both Ethernet and USB communication allow the ability to:

- Read ACU inlet and outlet air temperature
- Read and change cooling and cooling differential setpoints
- Read and change heating and heating differential setpoints
- Read and change the high and low temperature alarm settings
- Read and change the Gateway IP address, Device IP address, Subnet MASK, Trap IP address, and community string
- Read and change unit identification
- Read and change the state of IP address from static to dynamic or vice versa
- Read and change the air temperature unit of measure (from F to C or vice versa)
- Read current alarm status
- Evaporator fan control setting
- Read and change the control of door open switch

Software and configuration file downloads

As stated above, the PC interface tool, MIB file, EDS and EtherNet_IP Object file, Coil Register file, and Data Point file can be downloaded from remote access control support center link, https://www.nVent.com/en-us/HOFFMAN/remote-access-control.

USING NVENT HOFFMAN PC INTERFACE TOOL

nVent HOFFMAN PC Interface Tool gives the user the ability to communicate with nVent HOFFMAN air conditioning unit as to read and write air temperature data, high and low temperature alarm setting, active alarms, and other information from the controller remotely using either Ethernet or USB connection. With nVent HOFFMAN PC Interface Tool a user has the ability to remotely manage and monitor hundreds of nVent HOFFMAN air conditioners both domestically and globally at one central location at user's own pace, so long as all air conditioners are configured in the same subnet in the network. nVent HOFFMAN PC Interface Tool also supports text message and email alerting to a service technician when an alarm occurs. In addition, the tool also provides data logging capability for data analysis.

USB communication mode

Note: before connecting the unit to the PC, make note of Comm Ports present. After the unit is connected to the PC, a new Comm Port will be added to the list. Recommend using the new Comm Port.

- In the nVent HOFFMAN A.C. Monitor main screen, click on **Tools** and uncheck Use **Ethernet**
- Click on **Tools** menu again, the **Comm Port** menu is now enabled
- Put the mouser icon to the **Comm Port** and to the right there is small box with dropdown arrow
- Click on the dropdown arrow next to the small box to view the list of the Comm Port
- Write down the list of the Comm Port
- Connect the Mini-b USB cable from the PC or laptop to the A/C unit
- Click on **Tools** menu and point the mouser icon to the **Comm Port**, the small box with dropdown arrow presents to the right
- Click on the dropdown arrow and select the newest or higher number of the Comm Port

To view the controller data information from the A/C unit

- In the nVent HOFFMAN A.C. Monitor main screen, select **Single ACU Monitor** tab.
- Click on **Enable Comm** button, then the screen will be displayed the enclosure air temperature and other temperature settings information include the unit of measure.
- The **Enable Comm** text on the button now changes to **Disable Comm**.
- To stop the communication, click on the **Disable Comm** button and it will change to Enable Comm.

To change the temperature settings to the controller

- In the nVent HOFFMAN A.C. Monitor main screen, select **Single ACU Settings** tab.
- **Note:** the **Change Settings** button is disable and all settings are grayed out. Click on **Read Settings** button, all settings are now displayed on screen and the **Change Settings** button is now enable.
- To change any of the temperature setting, Unit ID, or Station Name, simply click up/down arrow on right of the box or highlight the current value and type the new value in the box.
- Check the box on the left, then click on **Change Setting** buttons to save the new setpoint.
- Click on **Read Settings** again to verify the new setpoint.
- Select **Single ACU Monitor** tab and click on **Enable Comm** to read the new temperature settings from the controller.
- Each of the setpoint should match the new variables that just entered from the **Single ACU Settings** tab.

To view and change the ethernet card (RAC) information

- In the nVent HOFFMAN A.C. Monitor main screen, select **Single ACU Ethernet Info** tab and notice that the **Reprogram ACU** button is disabled.
- Click on **Read Ethernet Info** button, the Ethernet information will be displayed and the **Reprogram ACU** button is enable.
- To change the Ethernet configuration such as Device IP Address, Gateway IP, and Trap IP, make sure to change the **Community** string to **private** from **public**. Note that case is very sensitive. The wording must be lower case only.
- Enter the new network configuration to Device IP address, Gateway IP, and Trap IP, then click on **Reprogram ACU** button to write to the network card.
- In order to be recognized the new networking configurations in local network, cycle power to the A/C unit is required.

To change the static network to dynamic network mode

- In the **Single ACU Ethernet** Info tab screen, click on **Read Ethernet Info** button to read the network card information.
  Note: the **Reprogram ACU** button is now enable.
- Check the box next to the **Use DHCP Server** on the upper left corner of the screen.
- Click on **Reprogram ACU** button. Now the network is switched to dynamic from static mode.
- To change the dynamic mode to static mode, in the **Single ACU Ethernet Info** tab window click on **Read Ethernet Info** button.
- Uncheck the box next to the **Use DHCP Server** on the upper left corner of the screen.
- Click on **Reprogram ACU** button to switch to static mode.

Ethernet communication mode

- In the nVent HOFFMAN A.C. Monitor screen, click on **Tools** on the main menu.
- In the dropdown window, check the **Use Ethernet** and notice that **Comm Port** is now disabled.
- Select **Single ACU Monitor** tab, in the window click on the **Device IP** box and type the IP address that need to communicate to the network card.
- Click on the **Community** box and then type the word **private**.
  Note: there are two community strings where one is for read ONLY and one is for read/write. The word “public” allows to read ONLY and “private” allows to read and write.
- Click on **Enable Comm** button to communicate to the network card and read the temperature information from the controller.
- Now the temperature settings information in the controller present on the screen.
- To view and change the temperature setpoints, Ethernet card configurations, static and dynamic networking mode, simply follow the same procedures that define for the USB communication mode above.

To monitor multiple A/C units in the network

With the Ethernet networking mode, it provides user with the ability to manage and monitor hundreds of the A/C units from distance domestically and globally at one central location as long as all A/C units configure in the same subnet in the network. Refer to remote access control (RAC) Instruction Manual for configuring multiple units and with text message and email capability in nVent HOFFMAN A.C. Monitor software. The remote access control Instruction Manual, P/N: 89091002 can be downloaded from nVent support center link, https://www.nVent.com/en-us/HOFFMAN/remote-access-control.

Alarm log accessible with support protocol

- Using custom software with below supporting file gives the user the ability to view a log of the last 25 alarms
  - MIB file for SNMP protocol
  - Register and Coil file for Modbus TCP protocol
  - EDS and/or EtherNet_IP Objects file for EtherNet/IP protocol
  - Profinet Data Point file for Profinet protocol

Remote access control pin-out

	FUNCTION	NAME	PIN#	WIRE#
J6	RETURN	C	1	BLK75
	ENCL MI	NO1	2	BLK77
	COOL	NO2	3	ORG78
	NA	N03	4	–
	HEAT	NO4	5	BRN76
J7	RETURN	C	2	YEL39
	ALARM RELAY OUTPUT	NO5	3	YEL38
J1	GROUND	G0	1	BLK40
	POWER (24 VAC)	G	2	WHT41
J2	NA	5V	1	–
	NA	S3	2	–
	INLET TEMP PROBE	S1	3	RED
	NA	Y1	4	–
	DOOR OPEN SWITCH	ID1	5	WHT63
	GROUND	O	6	WHT
	RESERVED	S5	7	–
	OUTLET TEMP PROBE	S2	8	RED45
	NA	Y2	9	–
	MAL-FUNCTION ALARM	ID2	10	BLU88
J3	RESERVED	ID3	1	–
	UNIT REMOTE ON/OFF	ID5	2	–
	NA	+V	3	–
	RESERVED	S6	4	–
	NA	VL	5	–
	RESERVED	ID4	6	–
	GROUND	O	7	–
	RESERVED	S4	8	–
J4	DATA (–)	–	1	BLK
	DATA (+)	+	2	RED
	GROUND	O	3	WHT
J5	DATA (–)	–	1	–
	DATA (+)	–	2	–
	GROUND	O	3	–

MAINTENANCE

Performing preventative maintenance (PM) helps to keep your nVent HOFFMAN AC unit operating at the highest most efficient levels. Maintenance should be performed at least twice a year, more frequently when in challenging conditions, such as dusty, high humidity, high heat, oily or corrosive environments.

Product failures due to lack of maintenance may impact warranty coverage.

Compressor

The compressor requires no maintenance. It is hermetically sealed, properly lubricated at the factory and should provide years of satisfactory operating service. Visually inspect the compressor for proper operation, mounting, visible signs for exposure to high heat.

Should the refrigerant charge be lost, recharging ports (access fittings) on the suction and discharge sides of the compressor are provided for recharging and/or checking suction and discharge pressures.

Under no circumstances should the access fitting covers be loosened, removed or tampered with unless authorized refrigeration repair service personnel.

Breaking of seals on compressor access fittings during warranty period will void warranty on hermetic system.

Recharging ports are provided for the ease and convenience of reputable refrigeration repair service personnel for recharging the air conditioner.

Inlet air filter

This air conditioner was designed with a dust resistant condenser coil. This allows it to be run filterless in most applications. The air conditioner is shipped with a filter in place for your convenience. For filterless operation, simply remove the filter. Should you decide the filter is necessary in your application, regular maintenance to clean this filter will assure normal operation of the air conditioner. The easily removable inlet air filter is located behind the front cover. If necessary filter maintenance is delayed or ignored, the maximum ambient temperatures under which the unit is designed to operate will be decreased.

If the compressor's operating temperature increases above designed conditions due to a dirty or clogged filter (or plugged condenser coil), the air conditioner's compressor will stop operating due to actuation of the thermal overload cut-out switch located on the compressor housing. As soon as the compressor temperature has dropped to within the switch's cut-in setting, the compressor will restart automatically. However the above condition will continue to take place until the filter or coil has been cleaned. It is recommended that power to the air conditioner be interrupted intentionally when abnormally high compressor operating temperature causes automatic shut-down of the unit. The above described shut-down is symptomatic of a clogged or dirty filter, thus causing a reduction in cooling air flow across the surface of the compressor and condenser coil.

How to remove, clean or install a new inlet air filter

Research Products (RP) aluminum washable air filters are designed to provide excellent filtering efficiency with a high dust holding capacity and a minimum amount of resistance to air flow. Because they are constructed entirely of aluminum they are lightweight and easy to service. Optimum filter performance is maintained by recoating the filters after washing with RP Super Filter Coat adhesive. To achieve maximum performance from your air handling equipment, air filters should be cleaned on a regular basis.

The inlet air filter is located behind the front access cover. To access the filter, loosen the access-cover screw. Swing top edge of access cover forward. Slide air filter up and out of retaining tabs. The filter may now be cleaned or new filter installed.

Cleaning Instructions:

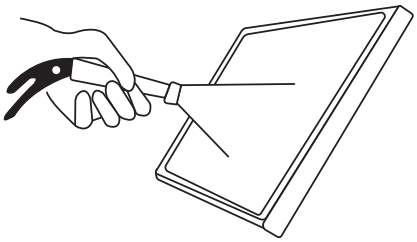

1. Flush the filter with warm water from the exhaust side to the intake side. **Do not use caustics**.

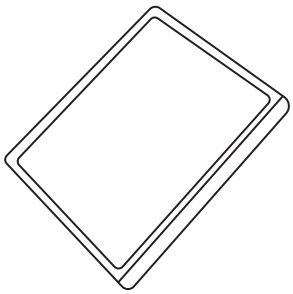

2. After flushing, allow filter to drain. Placing it with a corner down will assure complete drainage.

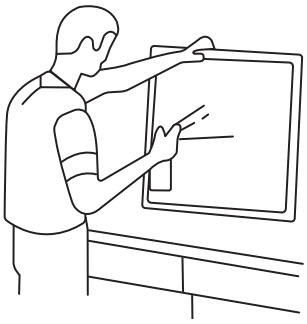

3. Recoat the filters with RP Super Filter Coat adhesive. When spraying filter do so from both sides for maximum concentration of adhesive.

Condenser and evaporator air movers

Impeller motors require no maintenance. All bearings, shafts, etc. are lubricated during manufacturing for the life of the motor.

If one of the condenser impeller motors (ambient impellers) should fail, it is not necessary to remove the air conditioner from the cabinet or enclosure to replace the blower. The condenser blower is mounted on its own bulkhead and is easily accessible by removing the front cover.

⚠ CAUTION:

Operation of the air conditioner in areas containing airborne caustics or chemicals can rapidly deteriorate filters, condenser coils, blowers and motors, etc. Contact nVent Equipment Protection for special recommendations.

Refrigerant loss

Each air conditioner is thoroughly tested prior to leaving the factory to insure against refrigeration leaks. Shipping damage or microscopic leaks not found with sensitive electronic refrigerant leak detection equipment during manufacture may require repair or recharging of the system. This work should only be performed by qualified professionals, generally available through a local, reputable air conditioning repair or service company.

Should the refrigerant charge be lost, access ports on the suction and discharge sides of the compressor are provided for recharging and/or checking suction and discharge pressures.

Refer to the data on the nameplate which specifies the type of refrigerant and the charge size in ounces.

Before recharging, make sure there are no leaks and that the system has been properly evacuated into a deep vacuum.

PREVENTATIVE MAINTENANCE/INSPECTION

Maintenance/Inspection Recommendations (Perform at least 2 times per year – more frequently as required by operational environment)		Last Completed			
Check Point	**Description**	**Date**	**Date**	**Date**	**Date**
Operational Inspection	Run unit through all modes of operation and record temperatures, voltages, and amperes Comments:				
Visual Inspection	Visually inspect unit for damage, cleanliness, missing, loose, or broken parts Comments:				
Filter Maintenance	Inspect, clean, and replace filter as necessary Comments:				
Clean Unit	Inspect and clean coils, fans/blowers, louvers, air inlets/outlets, interior and exterior of unit as required Comments:				
Controller Cycle Sequence	Cycle the controller through all modes of operation to ensure proper cycling and temperature setpoint operation. Adjust to proper setting (Typically 80°F - 85°F) Comments:				
Air Flow and Circulation	Inspect AC unit, cabinet, and surrounding area to ensure adequate airflow to and from the unit on both the inlet and outlet air channels for the ambient and cabinet air Comments:				
Seals, Gaskets, and Leaks	Inspect and repair the seals, gaskets, and access holes around the unit and/or cabinet that show signs of leaking air and/or moisture Comments:				
Condensate and Drains	Inspect and clean the condensate pans and drains to ensure proper drainage and dissipation of moisture Comments:				
Electrical/Wiring	Inspect for loose, damaged, corroded, or chaffing wiring and connections. Tighten, insulate, or tie-up wires as required Comments:				
Options and Accessories	Check operation and functionality of optional and accessory items such as digital display/controller, door switches, alarm switches, air baffles/deflectors, etc. Comments:				
Refrigeration System	Inspect refrigeration tubing/lines for signs of leaks, rubbing, corrosion, or damage. Check the compressor for proper operation, mounting, and visible signs of exposure to high heat Comments:				
Maintenance Records	Update maintenance records on the unit and in the management system Comments:				

TROUBLE SHOOTING

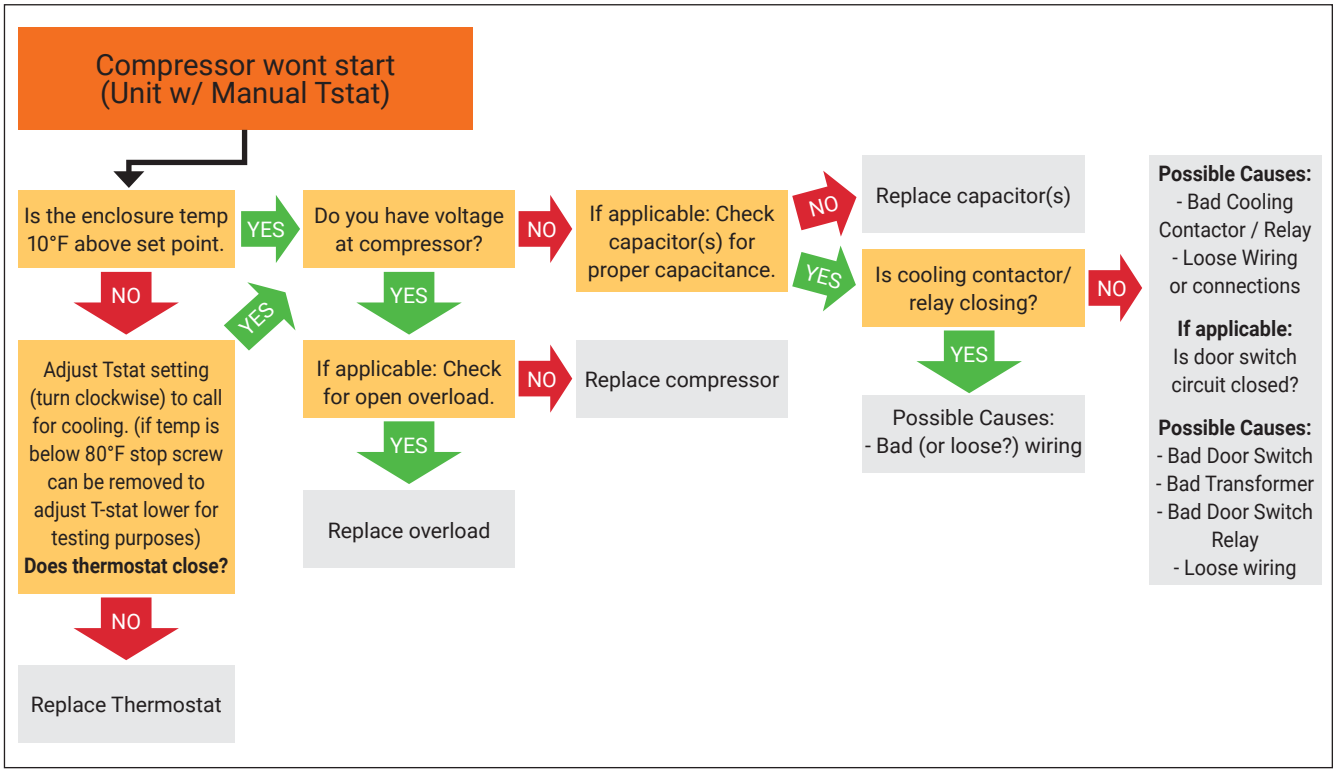

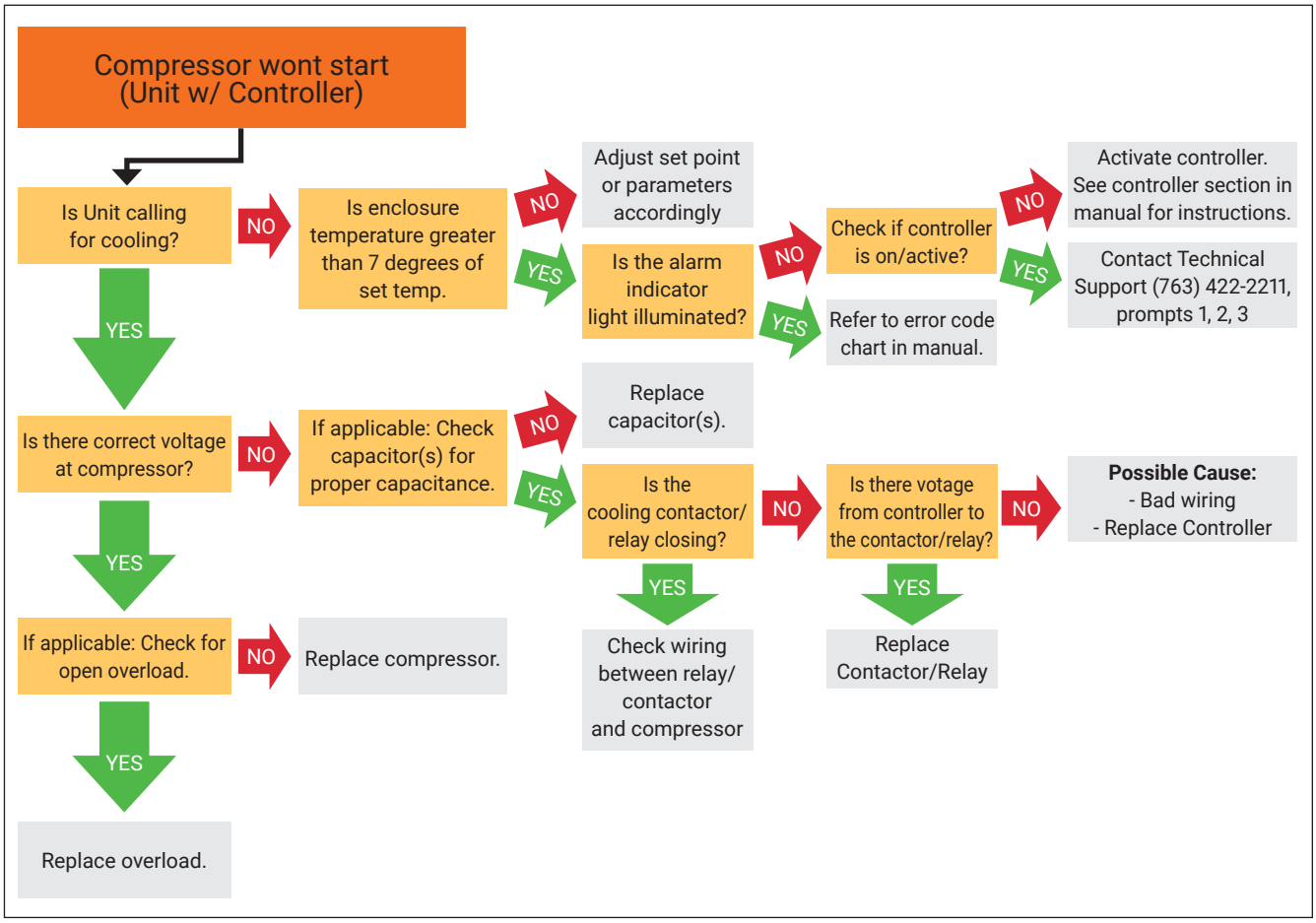

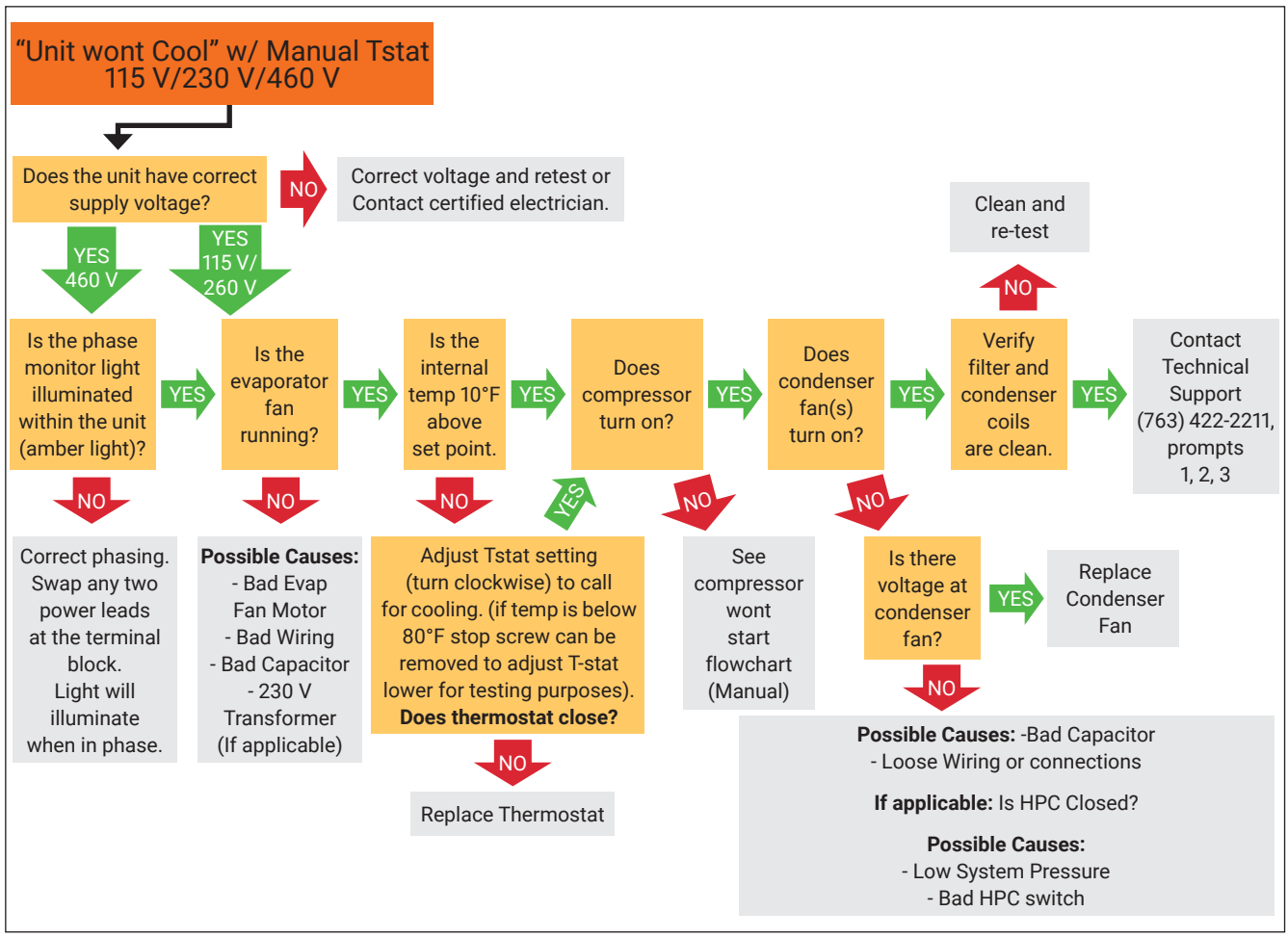
"Unit wont Cool" w/ Manual Tstat
115 V/230 V/460 V
Does the unit have correct supply voltage?
NO
Correct voltage and retest or Contact certified electrician.
YES 460 V
YES 115 V/ 260 V
Is the phase monitor light illuminated within the unit (amber light)?
YES
Is the evaporator fan running?
YES
Is the internal temp 10°F above set point.
YES
Does compressor turn on?
YES
Does condenser fan(s) turn on?
YES
Verify filter and condenser coils are clean.
YES
Contact Technical Support (763) 422-2211, prompts 1, 2, 3
NO
Clean and re-test
NO
Correct phasing. Swap any two power leads at the terminal block. Light will illuminate when in phase.
NO
Possible Causes: - Bad Evap Fan Motor - Bad Wiring - Bad Capacitor - 230 V Transformer (If applicable)
NO
Adjust Tstat setting (turn clockwise) to call for cooling. (if temp is below 80°F stop screw can be removed to adjust T-stat lower for testing purposes). Does thermostat close?
NO
Replace Thermostat
YES
NO
See compressor wont start flowchart (Manual)
NO
Is there voltage at condenser fan?
YES
Replace Condenser Fan
NO
Possible Causes: -Bad Capacitor - Loose Wiring or connections
If applicable: Is HPC Closed?
Possible Causes: - Low System Pressure - Bad HPC switch

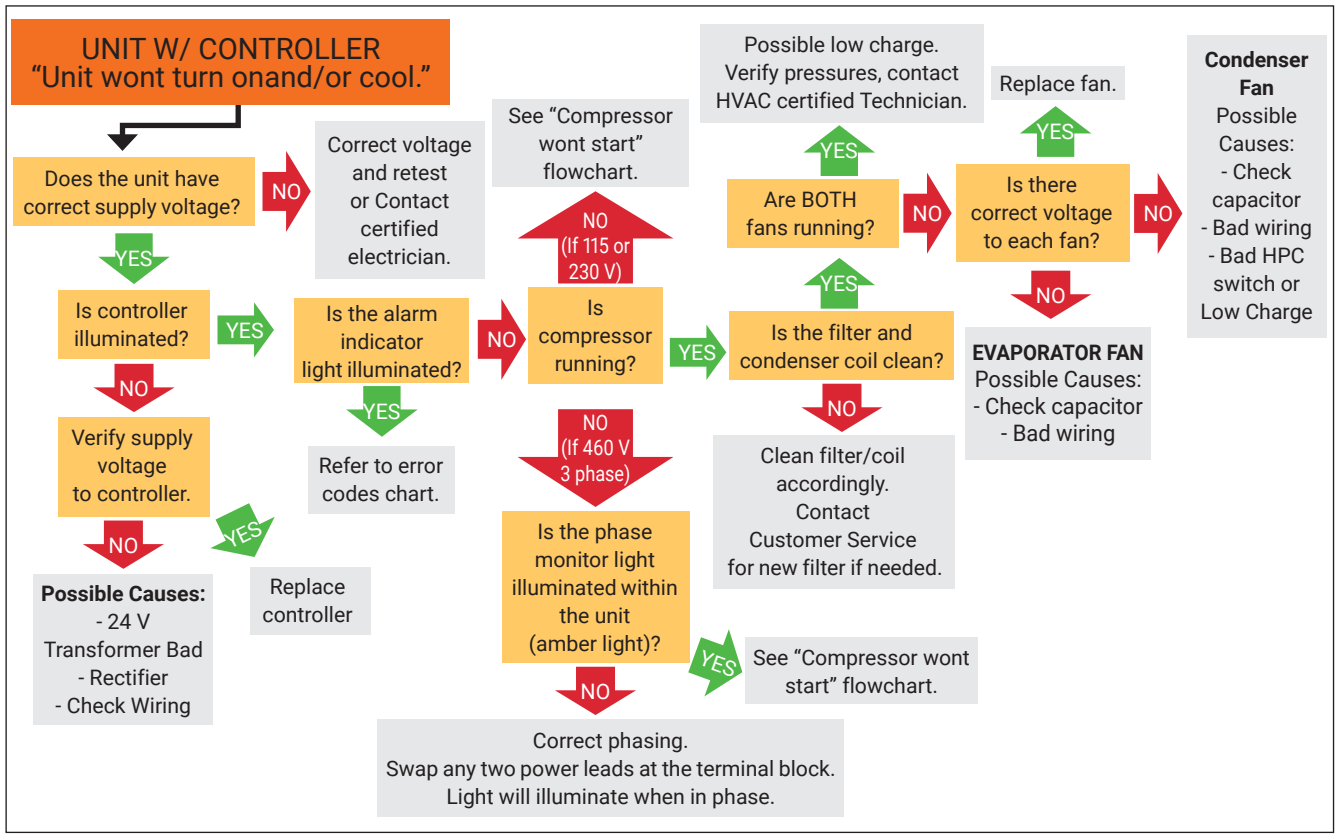
UNIT W/ CONTROLLER
"Unit wont turn onand/or cool."
Does the unit have correct supply voltage?
NO
Correct voltage and retest or Contact certified electrician.
YES
Is controller illuminated?
YES
Is the alarm indicator light illuminated?
NO
Is compressor running?
YES
Is the filter and condenser coil clean?
YES
Are BOTH fans running?
NO
Is there correct voltage to each fan?
NO
Condenser Fan Possible Causes: - Check capacitor - Bad wiring - Bad HPC switch or Low Charge
NO
Verify supply voltage to controller.
NO
Possible Causes: - 24 V Transformer Bad - Rectifier - Check Wiring
YES
Replace controller
YES
Refer to error codes chart.
NO (If 115 or 230 V)
See "Compressor wont start" flowchart.
NO (If 460 V 3 phase)
Is the phase monitor light illuminated within the unit (amber light)?
YES
See "Compressor wont start" flowchart.
NO
Correct phasing. Swap any two power leads at the terminal block. Light will illuminate when in phase.
NO
Clean filter/coil accordingly. Contact Customer Service for new filter if needed.
YES
Possible low charge. Verify pressures, contact HVAC certified Technician.
YES
Replace fan.
NO
EVAPORATOR FAN Possible Causes: - Check capacitor - Bad wiring

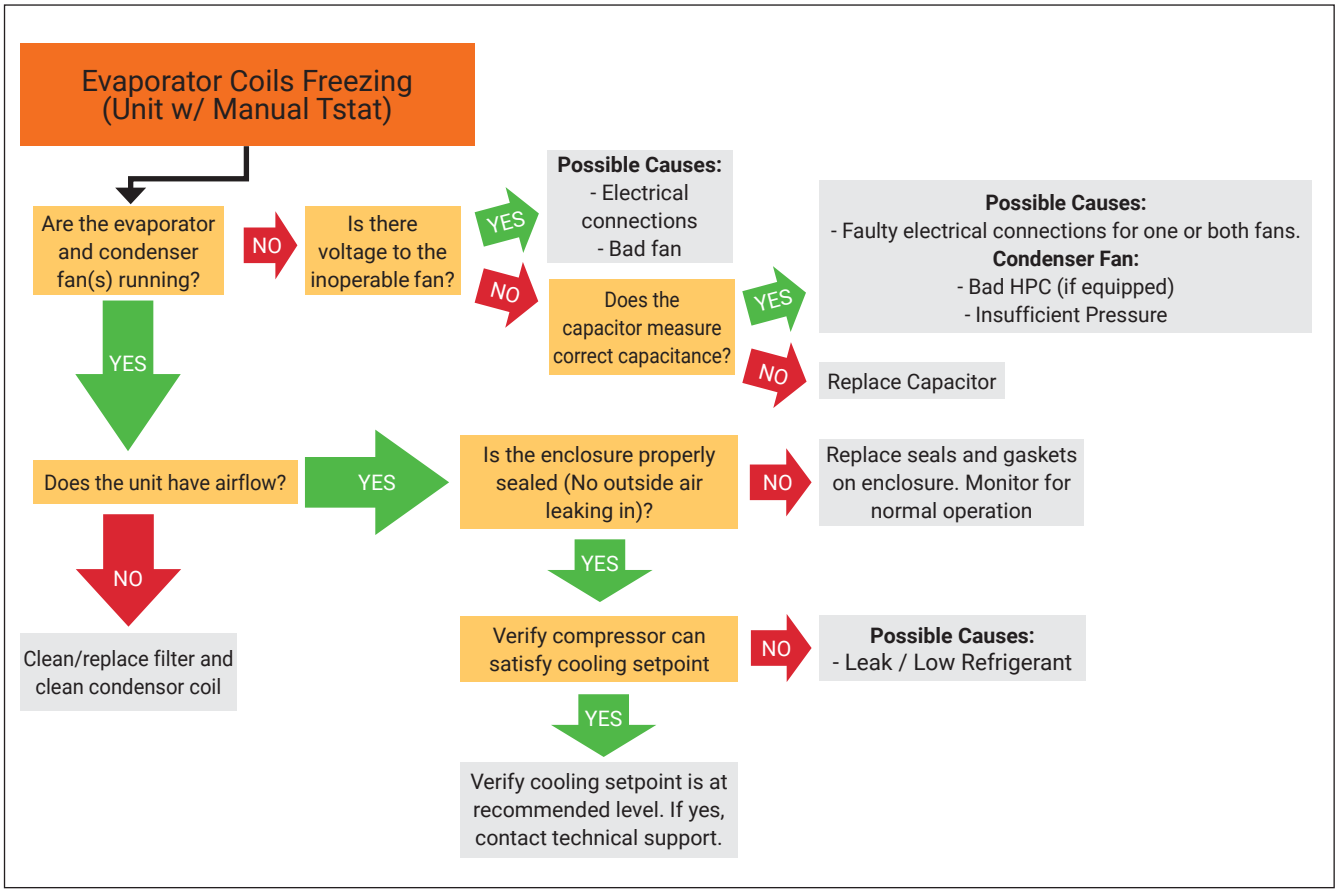
Evaporator Coils Freezing (Unit w/ Manual Tstat)
Are the evaporator and condenser fan(s) running?
NO
Is there voltage to the inoperable fan?
YES
Possible Causes: - Electrical connections - Bad fan
NO
Does the capacitor measure correct capacitance?
YES
Possible Causes: - Faulty electrical connections for one or both fans. Condenser Fan: - Bad HPC (if equipped) - Insufficient Pressure
NO
Replace Capacitor
YES
Does the unit have airflow?
YES
Is the enclosure properly sealed (No outside air leaking in)?
NO
Replace seals and gaskets on enclosure. Monitor for normal operation
YES
Verify compressor can satisfy cooling setpoint
NO
Possible Causes: - Leak / Low Refrigerant
YES
Verify cooling setpoint is at recommended level. If yes, contact technical support.
NO
Clean/replace filter and clean condensor coil

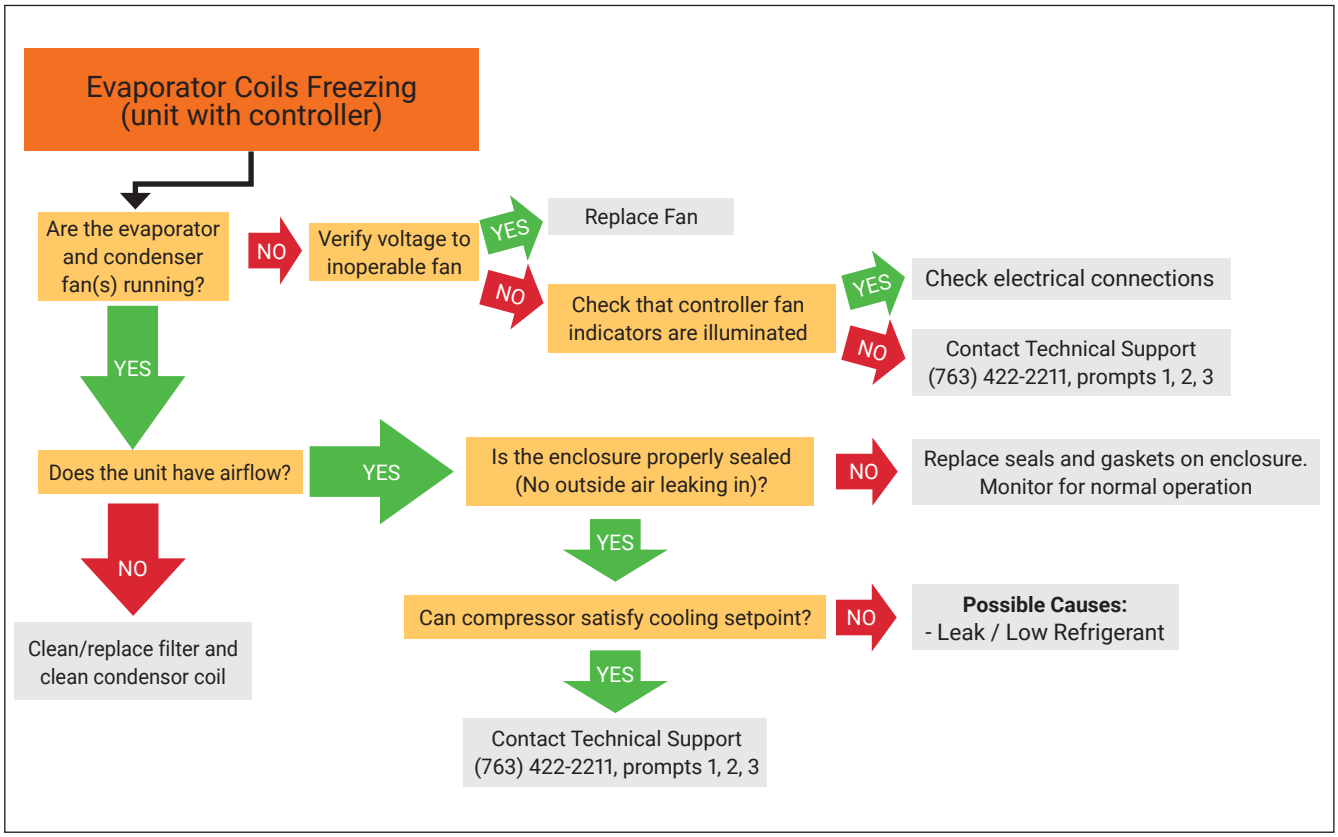
Evaporator Coils Freezing (unit with controller)
Are the evaporator and condenser fan(s) running?
NO
Verify voltage to inoperable fan
YES
Replace Fan
NO
Check that controller fan indicators are illuminated
YES
Check electrical connections
NO
Contact Technical Support (763) 422-2211, prompts 1, 2, 3
YES
Does the unit have airflow?
YES
Is the enclosure properly sealed (No outside air leaking in)?
NO
Replace seals and gaskets on enclosure. Monitor for normal operation
YES
Can compressor satisfy cooling setpoint?
NO
Possible Causes: - Leak / Low Refrigerant
YES
Contact Technical Support (763) 422-2211, prompts 1, 2, 3
NO
Clean/replace filter and clean condensor coil

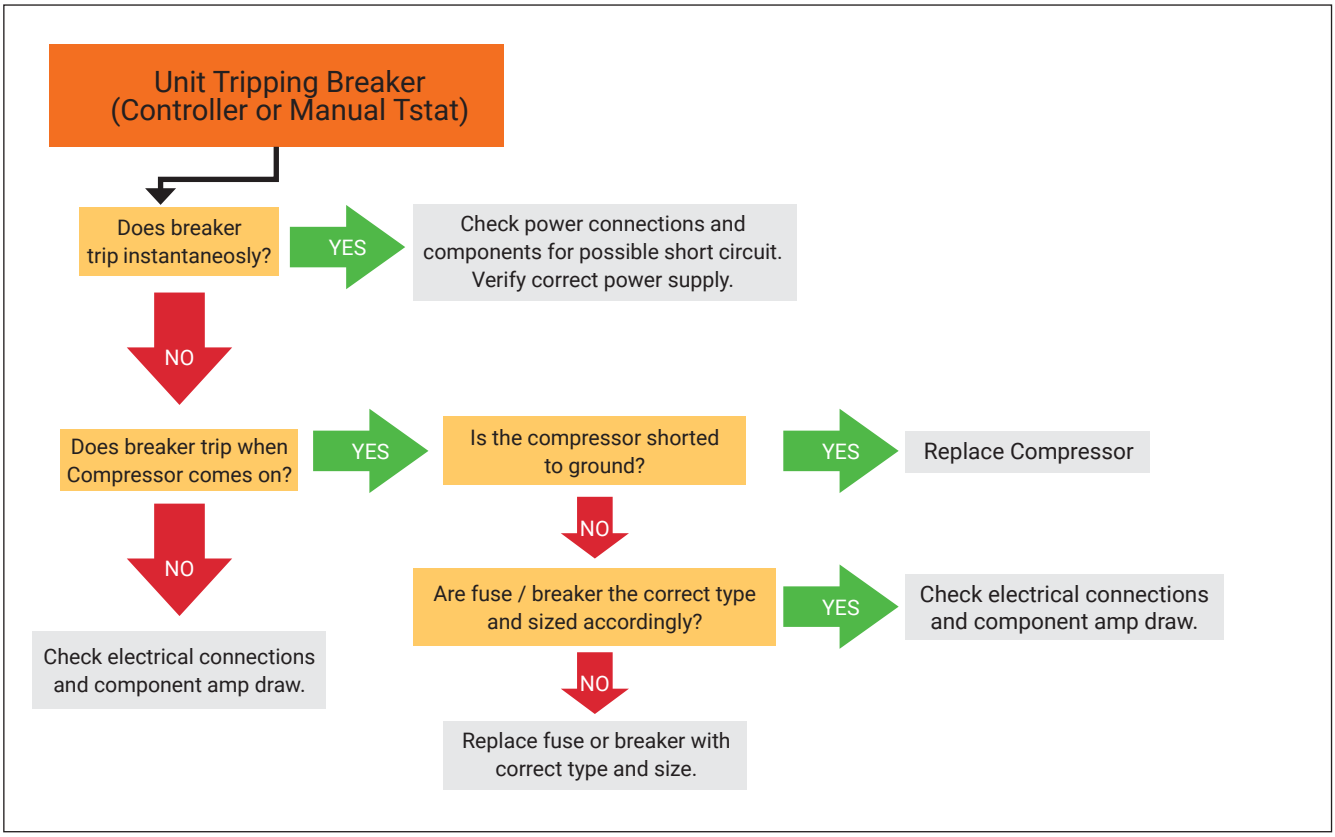
Unit Tripping Breaker (Controller or Manual Tstat)
Does breaker trip instantaneosly?
YES
Check power connections and components for possible short circuit. Verify correct power supply.
NO
Does breaker trip when Compressor comes on?
YES
Is the compressor shorted to ground?
YES
Replace Compressor
NO
Are fuse / breaker the correct type and sized accordingly?
YES
Check electrical connections and component amp draw.
NO
Replace fuse or breaker with correct type and size.
NO
Check electrical connections and component amp draw.

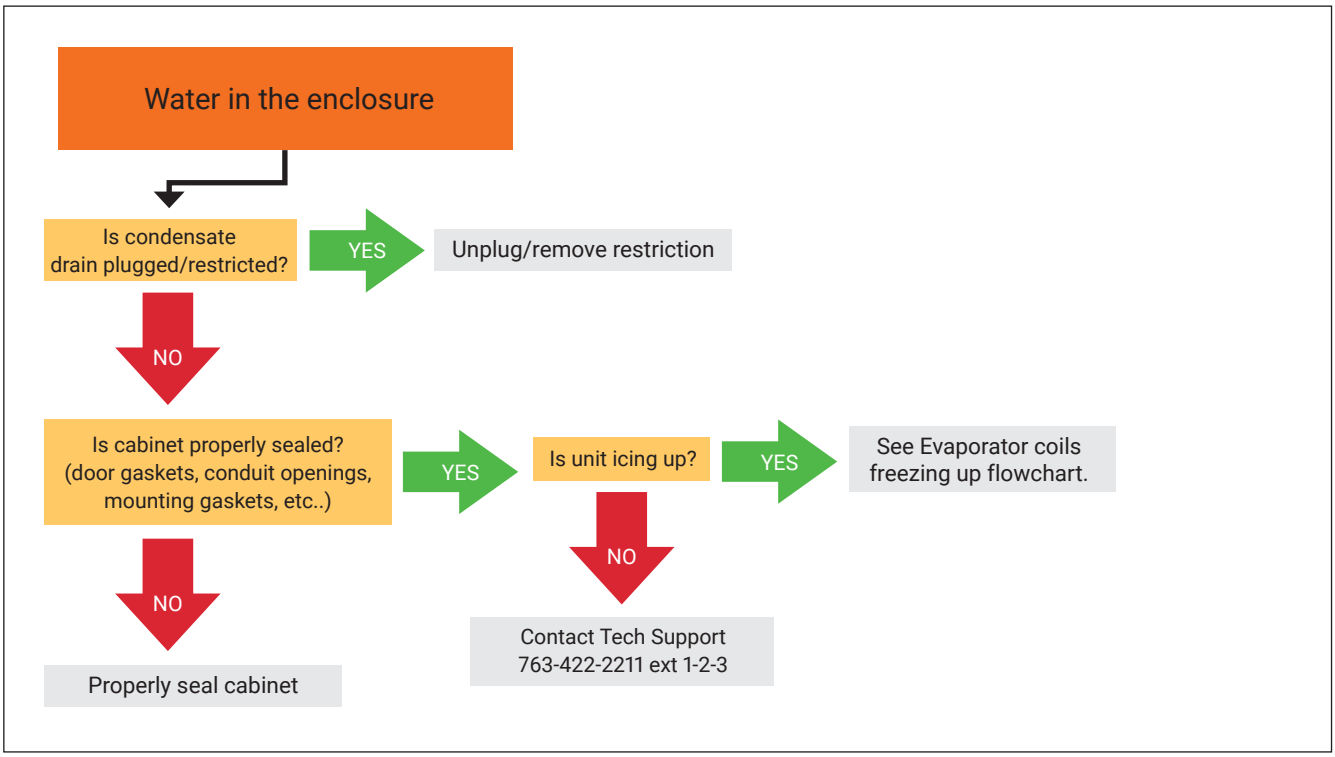
Water in the enclosure
Is condensate drain plugged/restricted?
YES
Unplug/remove restriction
NO
Is cabinet properly sealed? (door gaskets, conduit openings, mounting gaskets, etc..)
YES
Is unit icing up?
YES
See Evaporator coils freezing up flowchart.
NO
Contact Tech Support 763-422-2211 ext 1-2-3
NO
Properly seal cabinet

For additional technical support:
- Call: 763-422-2211 or
- Email: cooling.service@nVent.com or
- Download Field Service Request (FSR) from:
  http://HOFFMAN.nVent.com/en-us/cooling-field-service-request

F-GAS INFORMATION

	N360616GXXX	N360626GXXX	N360646GXXX	N360816GXXX	N360826GXXX	N360846GXXX
Refrigerant Kühlmittel Chłodziwo	R513A	R513A	R513A	R513A	R513A	R513A
GWP	573	573	573	573	573	573
Factory Charge Füllmenge durch Hersteller Opłata Fabryczna	567 Grams 567 Gramm 567 Gramów	624 Grams 624 Gramm 624 Gramów	454 Grams 454 Gramm 454 Gramów	765 Grams 765 Gramm 765 Gramów	907 Grams 907 Gramm 907 Gramów	936 Grams 936 Gramm 936 Gramów
CO_2 Equivalent CO_2 Equivalent CO_2 Ekwilalent	0.32 Tons 0,32 Tonnen 0,32 Tony	0.36 Tons 0,36 Tonnen 0,36 Tony	0.26 Tons 0,26 Tonnen 0,26 Tony	0.44 Tons 0,44 Tonnen 0,44 Tony	0.52 Tons 0,52 Tonnen 0,52 Tony	0.54 Tons 0,54 Tonnen 0,54 Tony

nVent

2100 Hoffman Way
Anoka, MN 55303 USA
Tel +1.763.422.2211
Fax +1.763.576.3200
nVent.com

Our powerful portfolio of brands:

CADDY ERICO HOFFMAN ILSCO RAYCHEM SCHROFF

©2024 nVent. All nVent marks and logos are owned or licensed by nVent Services GmbH or its affiliates. All other trademarks are the property of their respective owners. nVent reserves the right to change specifications without notice.