SEISMIC FREE-STANDING, DUAL-ACCESS CABINET, TYPE 4

SPECIFICATIONS

- 12 gauge steel construction
- Seams continuously welded and ground smooth; no holes or knockouts
- Lifting eyes for easy handling
- Welded front-to-rear mounting struts, 3 on each side
- Vault style 3-point latches operated by oil-tight, key-locking handle
- Concealed and removable hinges
- Seismic bottom mounting plates (qty. 6) made of painted plate steel for 5/8-in. diameter anchors
- Data pockets are high-impact thermoplastic
- Internal mounting channels welded horizontally to sides at top, bottom and center
- 36-in. wide models include 2 Seismic Rack Panel Kits with EIA 310 specified square-holes (.375 x .375) that are infinitely adjustable front to rear
- 24-in. models include 2 Rack Mounting Angles tapped #10-32 thread and spaced per EIA 310 that are infinitely adjustable front to rear
- On 36-in. wide models, front Seismic Rack Panel includes integral, vertical, RU-aligned fingers for supporting copper and fiber networking cables
- AC-Ready models include cutout for G52 (8,000 or 12,000 BTU) air conditioner; AC must be ordered separately
- Oil-resistant door gasket
- Bonding provision on door
- Provision for mounting enclosure light kits

INDUSTRY STANDARDS

UL 508A Listed; Type 4; File No. E61997
cUL Listed per CSA C22.2 No. 94; Type 4; File No. E61997

NEMA/EEMAC Type 4
E.I.A. RS310-D
CSA, File No. 42186, Type 4
IEC 60529, IP55
OSPHD Pre Approved OPM-0248-13, OPM-0247-13
NEBS-Telecordia GR-63-CORE Zone 4: Tested with 1000 lb. of equipment installed
Meets California Building Code (CBC) requirements

APPLICATION

Ideal where front or front and rear access is required. These Type 4 enclosures have sturdy unibody construction with 19-in. rack angles to support equipment. These enclosures are ideal for housing and protecting networking and communications from dust, liquid, and seismic events. 36-in. wide models include integral, vertical cable management that supports copper and fiber networking cables.

FINISH

RAL 7035 gray inside and outside, polyester powder paint

ACCESSORIES

See also Accessories
19-in. Rack-Mounted Shelves
Bonding and Grounding Kits
Full and partial Panels (Painted and Plated)
PDUs: 19-in. Rack- and Vertical-Mounted
Electric Heater
Door Stop Kit
Cooling Products (Air Conditioners, Heaters, Fan kits)
Enclosure Light Kits

MODIFICATION AND CUSTOMIZATION

nVent HOFFMAN excels at modifying and customizing products to your specifications. Contact your local nVent HOFFMAN sales office or distributor for complete information.

Standard Product

Catalog Number	AxBxC in.	AxBxC mm	Rack Units
D722436SDA	72.22 x 24.12 x 36.14	1834 x 613 x 918	35
D723646SDA	72.22 x 36.14 x 46.16	1834 x 918 x 1173	35
D902436SDA	90.26 x 24.12 x 36.14	2293 x 613 x 918	42
D903646SDA	90.26 x 36.14 x 46.16	2293 x 918 x 1173	42

Standard Product: **AC-Ready Cabinets**

Catalog Number	AxBxC in.	AxBxC mm	Rack Units
D722436SDAAC	72.22 x 24.12 x 36.14	1834 x 613 x 918	35
D723646SDAAC	72.22 x 36.14 x 46.16	1834 x 918 x 1173	35

Order AC separately.

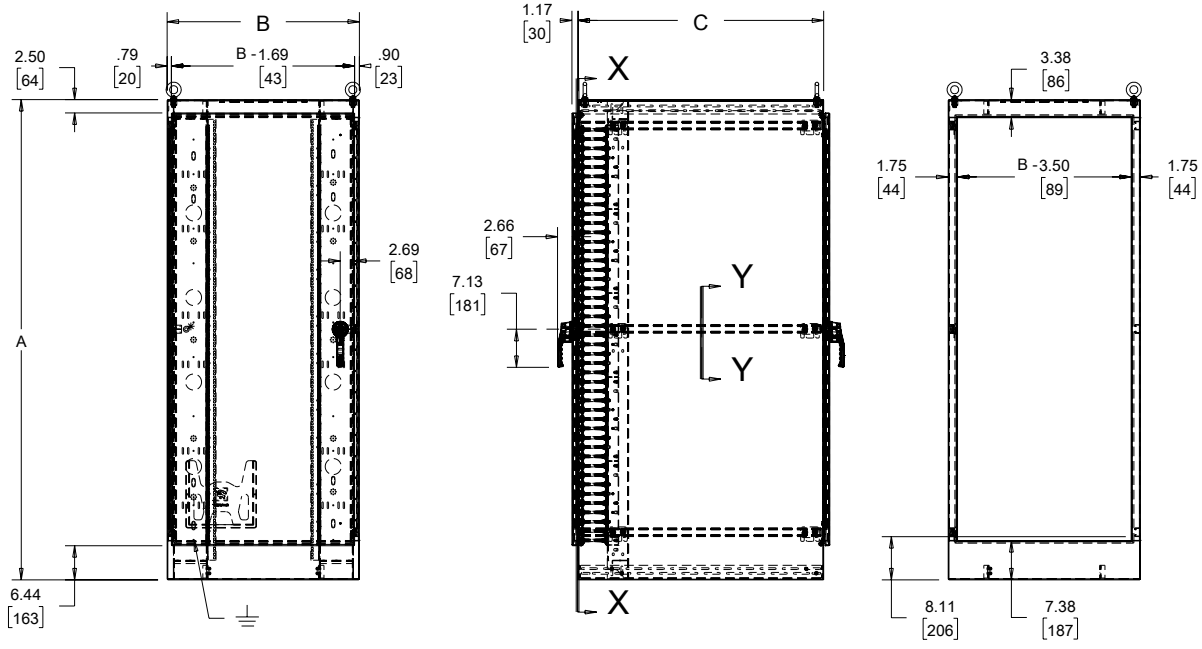

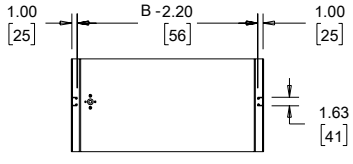

Y-Y

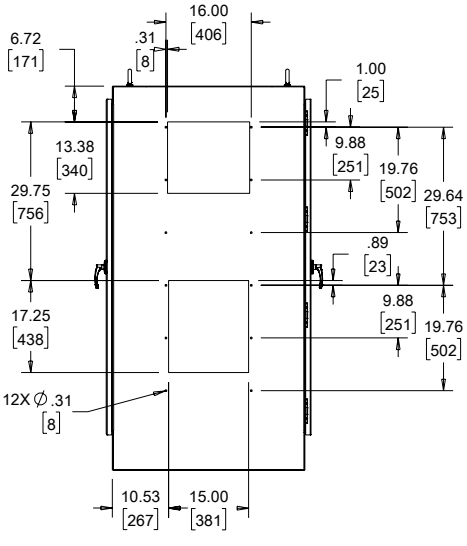

AC-READY MODELS

89143224

nVent | HOFFMAN

G52 AIR CONDITIONER SPECIFICATIONS

Performance Data **G52 Models 8000/12000 BTU/Hr. (2300/3500 Watt)**

CATALOG NUMBER						
Indoor Model	G520816G050	G520826G050	G520846G050	G521216G050	G521226G050	G521246G050
Indoor Model Stainless Steel Type 4X	G520816G051	G520826G051	G520846G051	G521216G051	G521226G051	G521246G051
Indoor Model with Remote Access Control*	G520816G060	G520826G060	G520846G060	G521216G060	G521226G060	G521246G060
Outdoor Model without Heat Pkg.	G520816G100	G520826G100	G520846G100	G521216G100	G521226G100	G521246G100
Outdoor Model Partial Recessed Mount**	G520816G101	G520826G101	G520846G101	G521216G101	G521226G101	G521246G101
Outdoor Model with Heat Pkg.	G520816G150	G520826G150	G520846G150	G521216G150	G521226G150	G521246G150
Outdoor Model with Heat Pkg. Stainless Steel Type 4X	G520816G151	G520826G151	G520846G151	G521216G151	G521226G151	G521246G151
COOLING PERFORMANCE						
Nominal:						
BTU/Hr.	**8000**	**8000**	**8000**	**12000**	**12000**	**12000**
Watts	**2300**	**2300**	**2300**	**3500**	**3500**	**3500**
At 131 F/131 F (55 C/55 C):						
BTU/Hr.	7300/8200	7300/8200	8800/9800	12000/12500	12000/12500	11100/12000
Watts	2139/2403	2139/2403	2578/2871	3516/3662	3516/3662	3252/3516
At 95 F/95 F (35 C/35 C):						
BTU/Hr.	6000/6800	6000/6800	7400/8200	9900/10700	9900/10700	9900/10700
Watts	1758/1992	1758/1992	2168/2402	2900/3135	2900/3135	2900/3135
Refrigerant	R134a	R134a	R134a	R134a	R134a	R134a
Refrigerant Charge (ounces/grams)	24/680	24/680	24/680	38/1077	38/1077	38/1077
Operating Temperature Range:						
Maximum (°F/°C)	131/55	131/55	131/55	131/55	131/55	131/55
Indoor Minimum (°F/°C)	50/10	50/10	50/10	50/10	50/10	50/10
Outdoor Minimum (°F/°C)	-40/-40	-40/-40	-40/-40	-40/-40	-40/-40	-40/-40
Airflow at 0 Static Pressure:						
Internal loop 50 Hz (CFM / m^3/hr.)	285/484	285/484	285/484	287/487	287/487	287/487
External loop 50 Hz (CFM / m^3/hr.)	650/1104	650/1104	650/1104	635/1078	635/1078	635/1078
Internal loop 60 Hz (CFM / m^3/hr.)	310/527	310/527	310/527	305/518	305/518	305/518
External loop 60 Hz (CFM / m^3/hr.)	700/1189	700/1189	700/1189	650/1104	650/1104	650/1104
Max. Heater W (Outdoor Models):	2000	2000	2000	2000	2000	2000
ELECTRICAL DATA						
Rated Voltage	**115**	**230/208-230**	**400/460 3~**	**115**	**230/208-230**	**400/460 3~**
Frequency (Hz)	50/60	50/60	50/60	50/60	50/60	50/60
Operating Range	+/- 10%	+/- 10%	+/- 10%	+/- 10%	+/- 10%	+/- 10%
Max. Power Consumption (W)	1250/1415	1250/1415	806/957***	2100/2427	1830/2130	910/1106***
Max. Nominal Current (A at 50/60 Hz)	11.2/12.3	5.6/7.0-6.2	3.1/3.2	16.1/21.0	9.1/10.6-9.5	3.6/3.5
Starting Current (A)	48	27	16	57	38	16
Agency Approvals	UL/cUL Listed CE EAC Others available upon request					
Power Input Description	Terminal Block					
ENCLOSURE PROTECTION						
UL Type	Type 12, 3R, 4 standard** Type 4X Stainless steel optional					
International Rating	IP56 internal loop IP34 external loop					
CONTROLLER						
Description	Basic mechanical thermostat with digital display					
Thermostat Location	Enclosure side on all base models					
Digital Display Location:						
Indoor Models	Ambient side					
Outdoor Models	Enclosure side					
Factory Thermostat Setting (F/C)	80/27					
SOUND LEVEL						
At 1.5 Meters	68 dB(A)					
UNIT CONSTRUCTION						
Material	Galvanized sheet metal standard Stainless steel optional					
Finish	RAL 7035 light-gray, semi-textured powder-coat paint standard Other colors available					
ACCESSORIES						
EASYSWAP Adaptor Plenum (GENESIS M52)	Enables SPECTRACOOL to be mounted to a GENESIS M52 air conditioner cutout Catalog Number PLM52G52					
UNIT DIMENSIONS						
Height (in./mm)	52.69/1338					
Width (in./mm)	17.12/435					
Depth (in./mm)	11.66/296					
Weight (lb./kg)	128/58.1	128/58.1	138/62.6	131/59.4	131/59.4	141/64.0

*Units with Remote Access Control utilize a digital controller and communicate via EtherNet/IP, Profinet, Modbus TCP/IP and SNMP over ethernet or modbus RTU over USB.

**Outdoor Model Partial Recessed Mount units are UL Type 12, 3R only.

***Watts based on .65 power factor.

SEISMIC RACK PANEL KIT

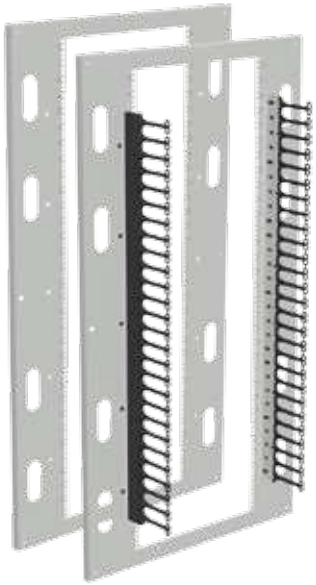

Used when converting a standard Free-Stand Enclosure to a Seismic Free-Stand Enclosure. Rack Panel allows rack-mount equipment to be installed in 36-in. wide enclosures. Seismic Rack Panel has EIA 310 specified square-holes (.375x.375) and larger openings to allow cables to pass through panel. Use with Seismic Panel Support Kits (included) and Seismic Mounting Plate Kits to obtain Seismic standards. Made from 12 gauge steel and painted RAL 7035.

Available with or without vertical cable management for copper and fiber networking cables. Kit includes one (1) Seismic Rack Panel and two (2) Seismic Panel Supports with hardware.

Standard Product

Catalog Number	D in./mm	E in./mm	Fits Enclosure Height x Width in./mm	Cable Managers	Ref. Drawing
A72P36RP	60.00 1524	32.40 823	72.22 x 36.14 1834 x 918	No	A
A72P36RPC	60.00 1524	32.40 823	72.22 x 36.14 1834 x 918	Yes	B
A90P36RP	78.00 1981	32.40 823	90.26 x 36.14 2293 x 918	No	A
A90P36RPC	78.00 1981	32.40 823	90.26 x 36.14 2293 x 918	Yes	B

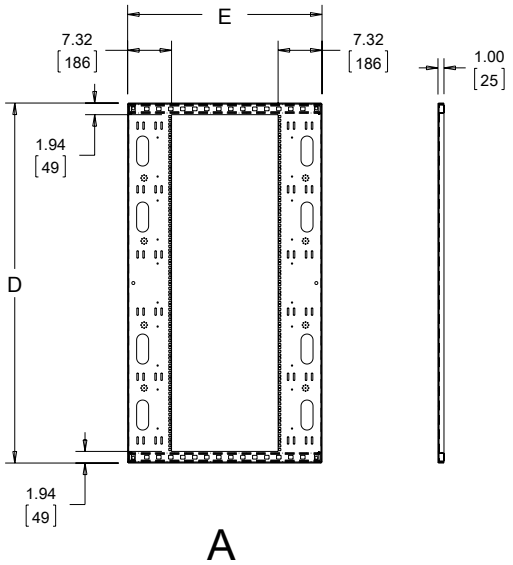

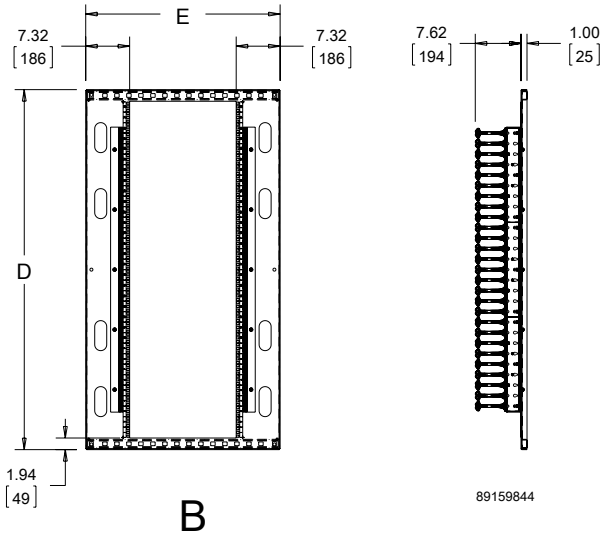

SEISMIC MOUNTING PLATE KITS

Kit of six (6) stainless steel mounting plates install over the mounting holes in the base of the enclosure. The mounting plates come predrilled to accept 1/2-in., 5/8-in. or 3/4-in. diameter mounting hardware (not included). Plate dimensions are 3.75 x 3.75 x .25 in. (95 x 95 x 6 mm).

BULLETIN: DCY

Standard Product

Catalog Number	Description	Anchor Size
ASMP12SS	Seismic Mounting Plate, 1/2-in.	1/2 in.
ASMP58SS	Seismic Mounting Plate, 5/8-in.	5/8 in.
ASMP34SS	Seismic Mounting Plate, 3/4-in.	3/4 in.

RACK MOUNTING ANGLES - L-STYLE (TYPE RP)

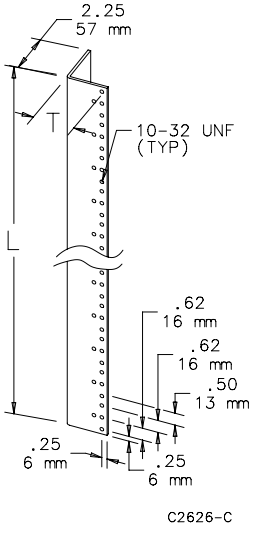

Pairs of full-length rack mounting angles are available for mounting 19-in. and 24-in. rack-mounted equipment. Type RP rack mounting angles are 10 gauge steel with mounting holes tapped #10-32 thread and spaced per EIA standard RS-310-D universal spacing. Angles and mounting hardware are plated. All mounting hardware is furnished.

BULLETIN: A80

Catalog Number	Fits Enclosure A x B in./mm	For Rack Size in./mm	K in./mm	K (m)	L in./mm	M in./mm	T in./mm	Number of Units
A60RP24F5	60.00 x 24.00 1524 x 610	19.00 483	3.78	96	49.00 1245	7.78 198	1.94 49	28
A72RP24F5	72.00 x 24.00 1829 x 610	19.00 483	3.66	93	61.25 1556	7.66 195	1.94 49	35
A72RP30F5	72.00 x 30.00 1829 x 762	24.00 610	3.66	93	61.25 1556	7.66 195	2.44 62	35
A90RP24F5	90.00 x 24.00 2286 x 610	19.00 483	3.91	99	78.75 2000	7.91 201	1.94 49	45

One unit equals 1.75 inches (44 mm).

SCREW PACKAGES

Screw Packages are for mounting rack panels and equipment to rack angles.

BULLETIN: A80, DACCY

Catalog Number	Description	Color	Pkg. Qty.
ES1224	12-24 x 5/8 in. combo head	Plated	20
ES1224250	12-24 x 5/8 in. combo head	Plated	250
ES1224B	12-24 x 5/8in. combo head	Black	20
ES1224B250	12-24 x 5/8 in. combo head	Black	250
ASM5	M5 x 20 mm combo Head	Plated	20
ASM6	M6 x 16 mm combo head	Plated	20
ASM5T	M5 x 12 mm thread-forming Phillips hex head screws	Plated	20
ASM6250	M6 x 16 mm combo head	Plated	250
AS1032	10-32 x 5/8 in. combo head	Plated	20
AS1032250	10-32 x 5/8 in. combo head	Plated	250
AS1032B	10-32 x 5/8 in. combo head	Black	20

Use ASM5T on ProLine frame or ProLine S1 extruded holes.

CAGE NUT PACKAGE

Cage Nut Packages are for use with square-hole rack angles. Cage nuts are plated steel.

BULLETIN: DACCY

Catalog Number	Description	Pkg. Qty.
PM5CN	M5 cage nut	20
PM6CN	M6 cage nut	20
PM6CN250	M6 cage nut	250
P1032CN	10-32 cage nut	20
P1032CN250	10-32 cage nut	250
P1224CN	12-24 cage nut	20
P1224CN250	12-24 cage nut	250