PROLINE G2

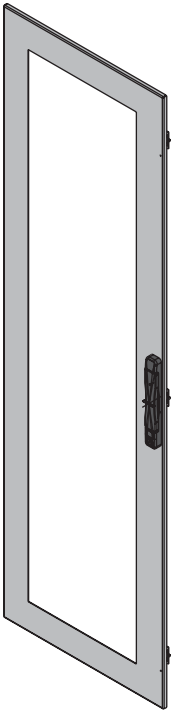

© 2018 Hoffman Enclosures Inc.

1 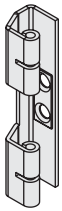 (3x)	2 (3x)	3 (3x)
4 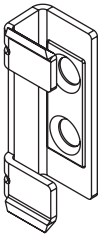 (3x)	5 M6X16 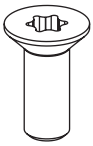 5.1 ± 0.5N*M [45 ± 4.5 LBF-IN] (6x)	6 (3x)
7 (1x)		

© 2018 Hoffman Enclosures Inc.

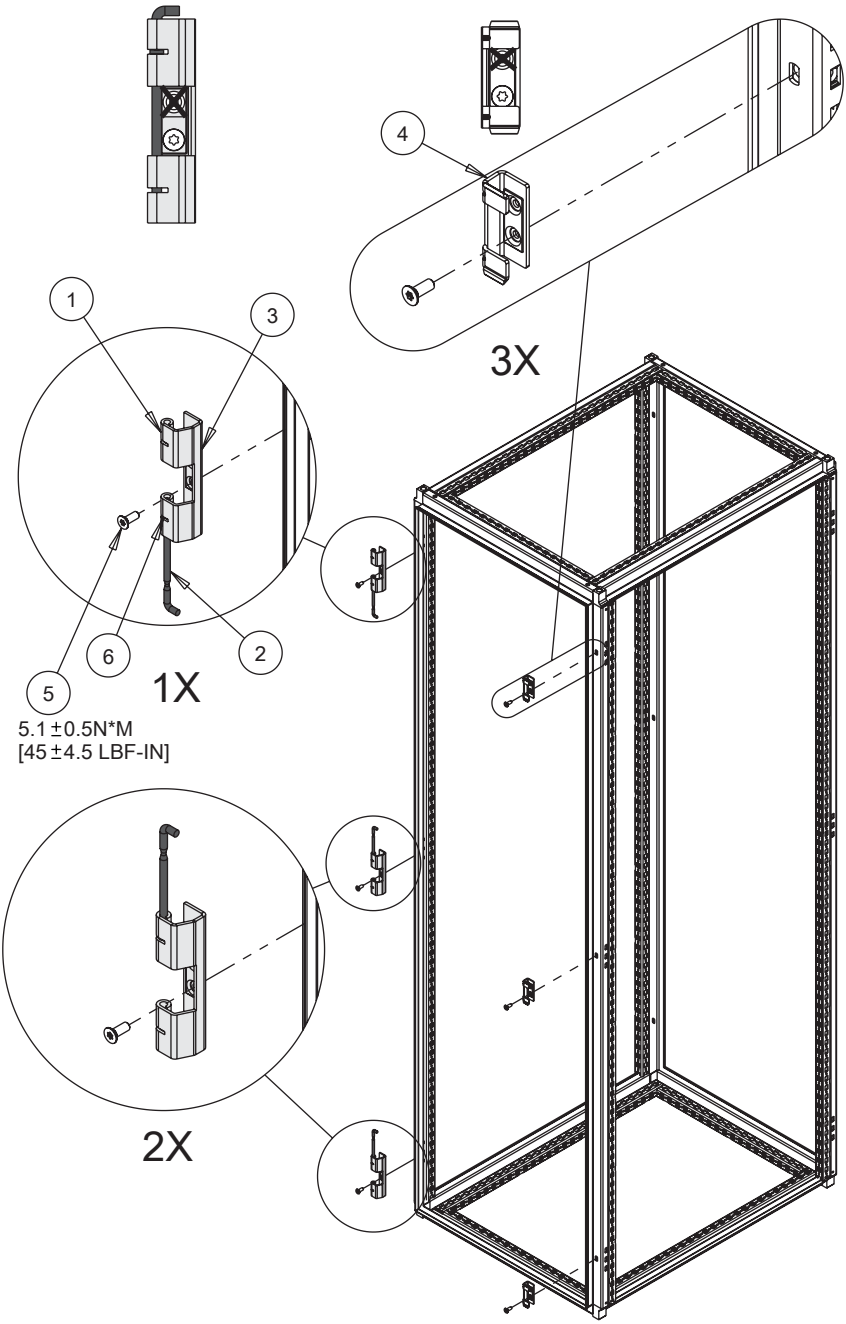

1

© 2018 Hoffman Enclosures Inc.

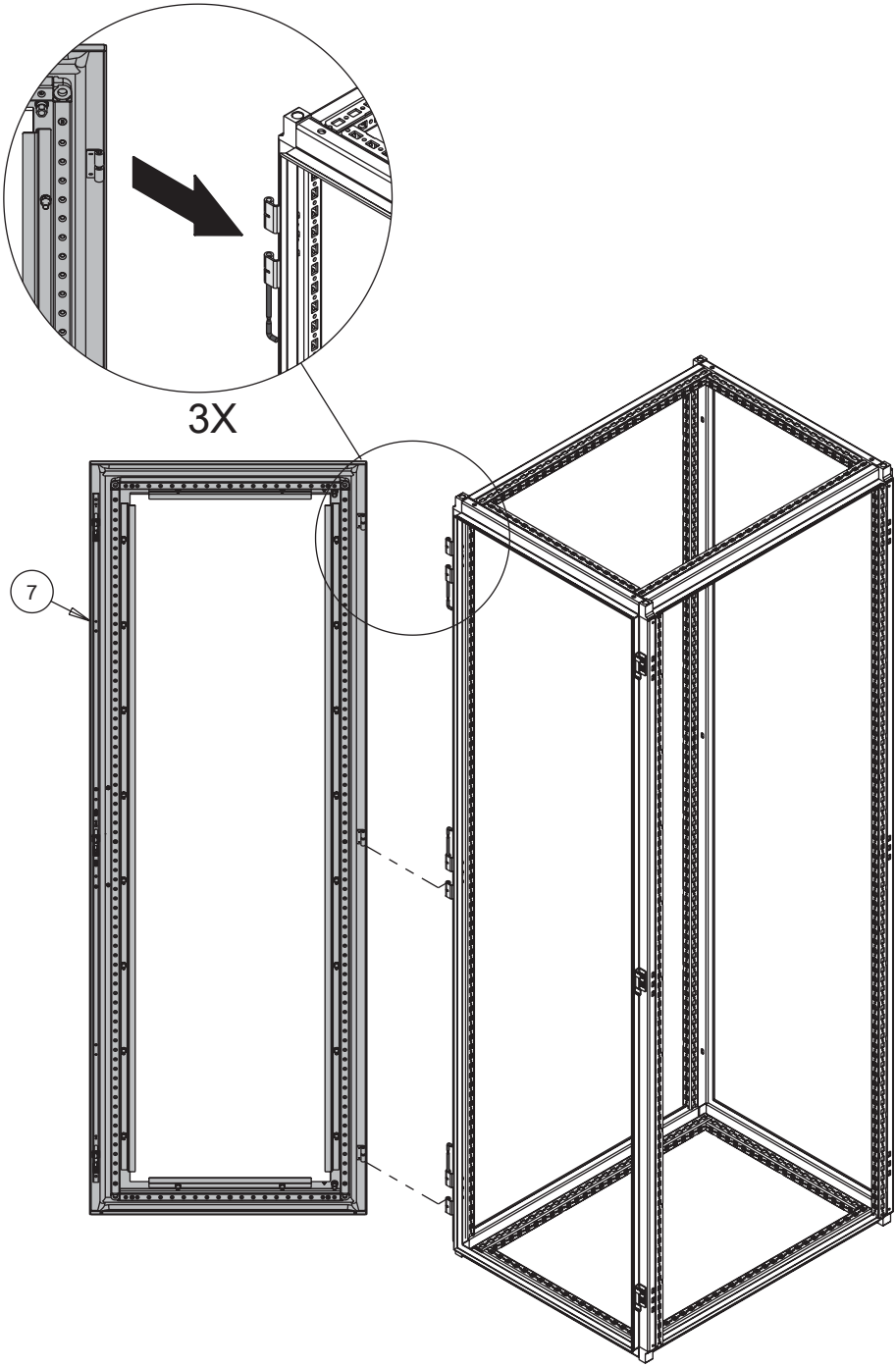

2

© 2018 Hoffman Enclosures Inc.

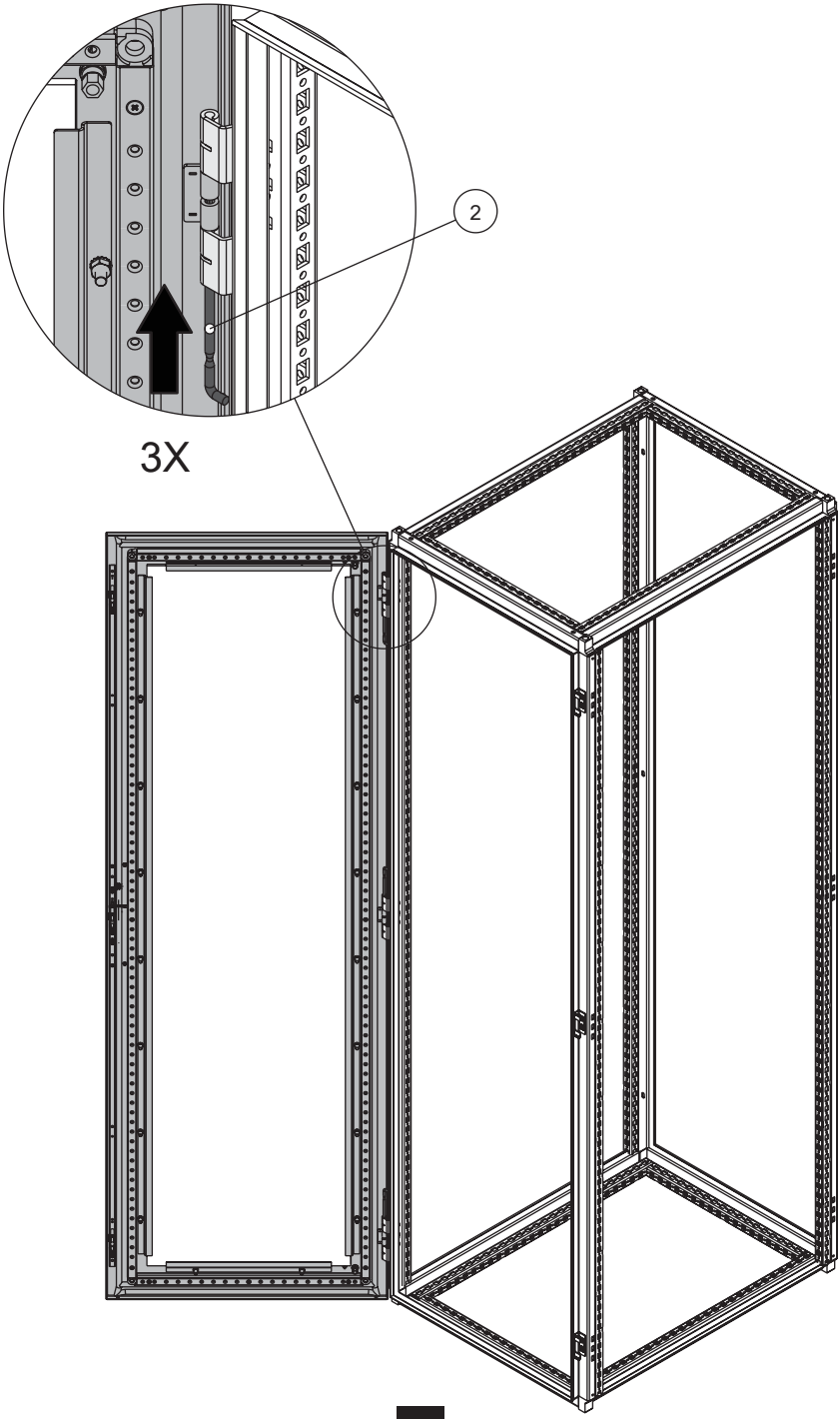

3

© 2018 Hoffman Enclosures Inc.

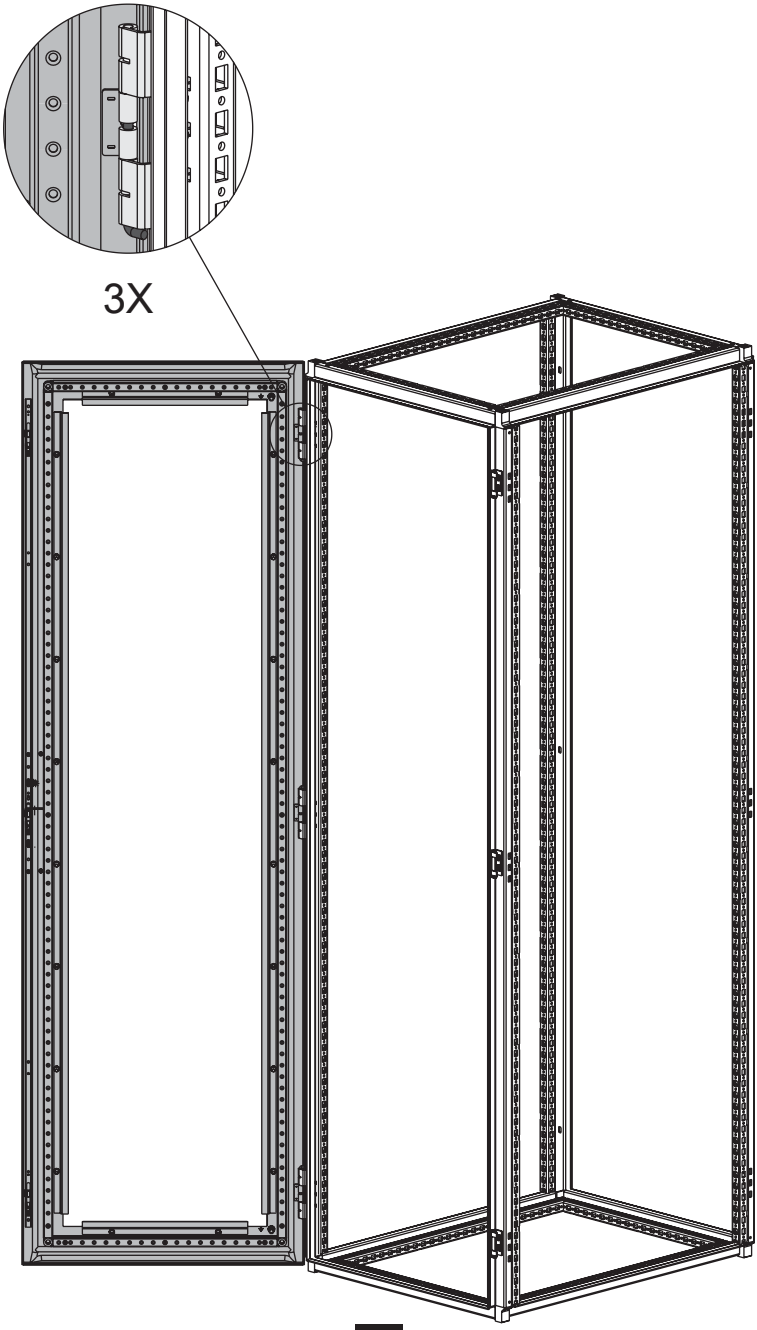

4

© 2018 Hoffman Enclosures Inc.

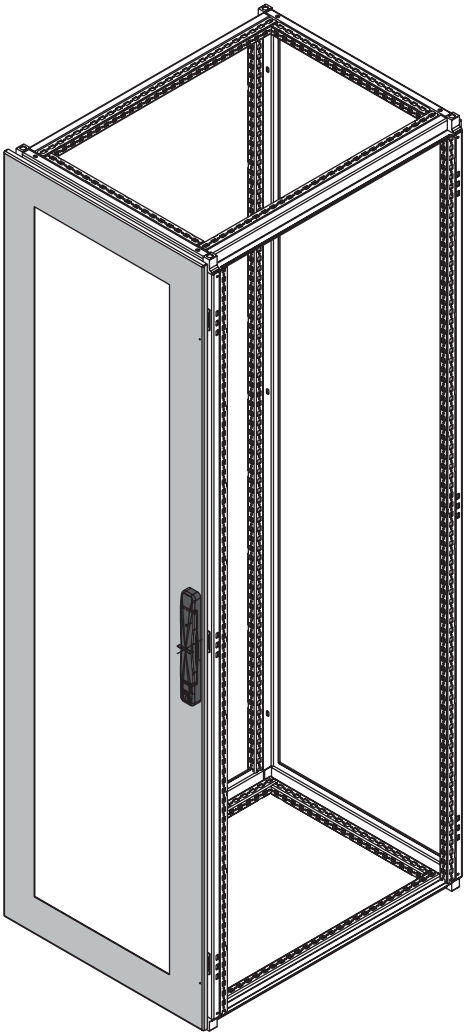

5

© 2018 Hoffman Enclosures Inc.

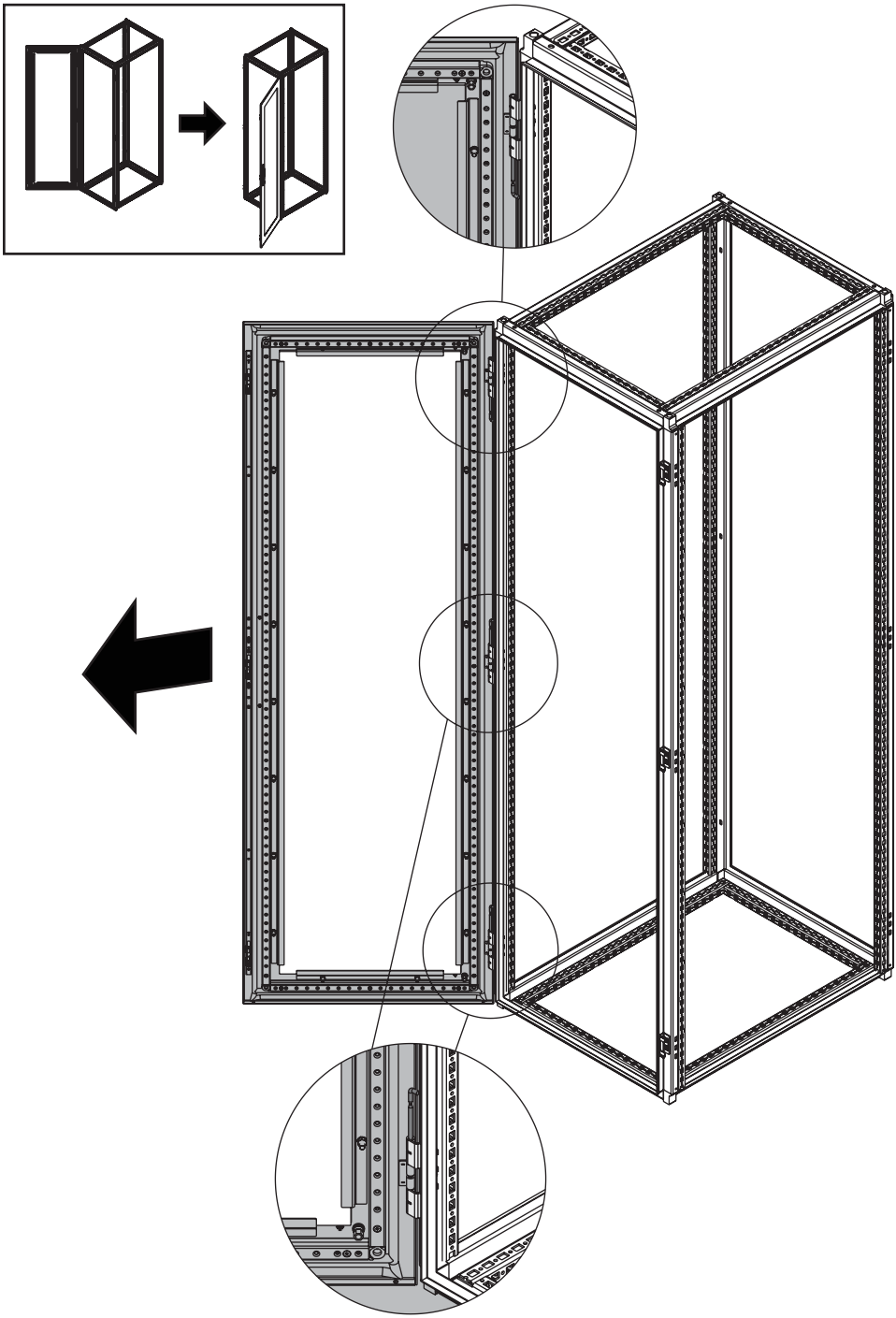

1

© 2018 Hoffman Enclosures Inc.

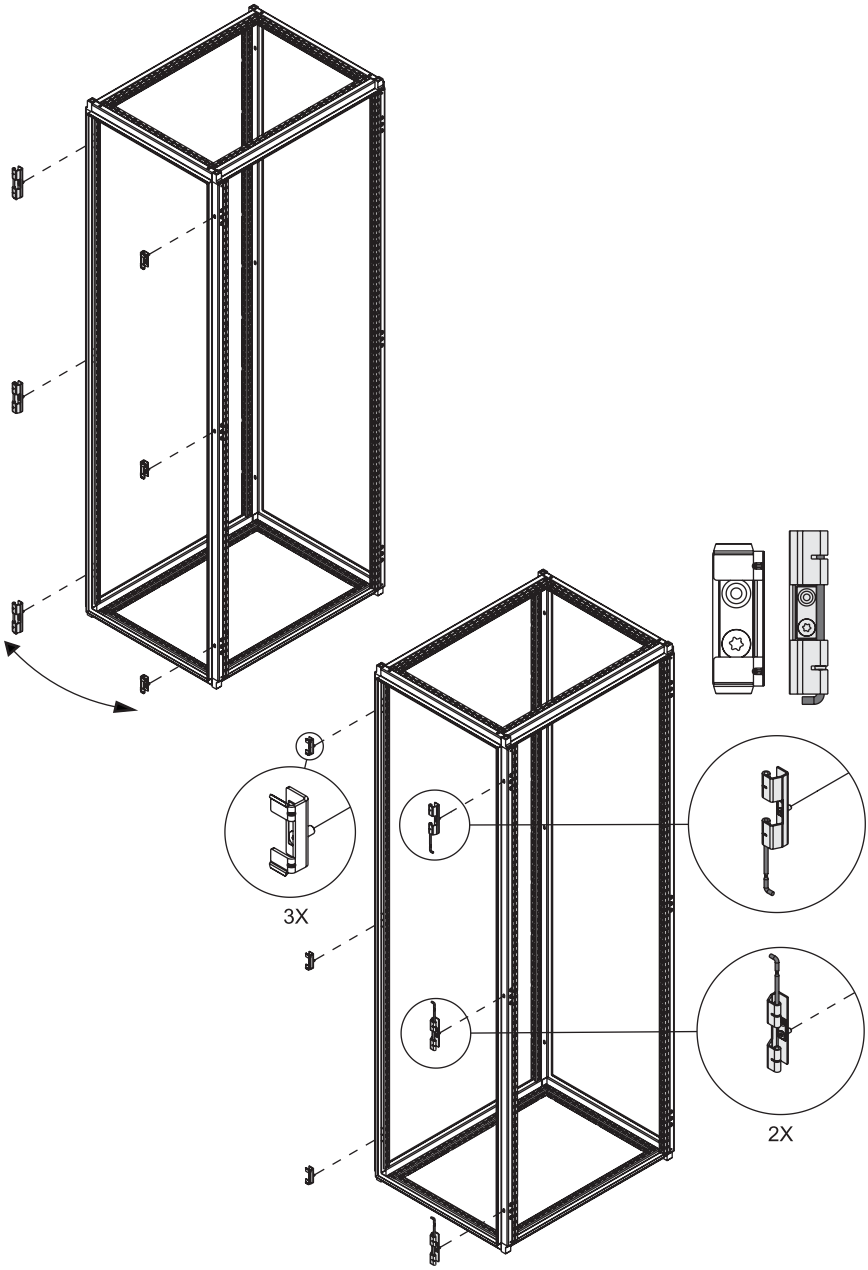

2

© 2018 Hoffman Enclosures Inc.

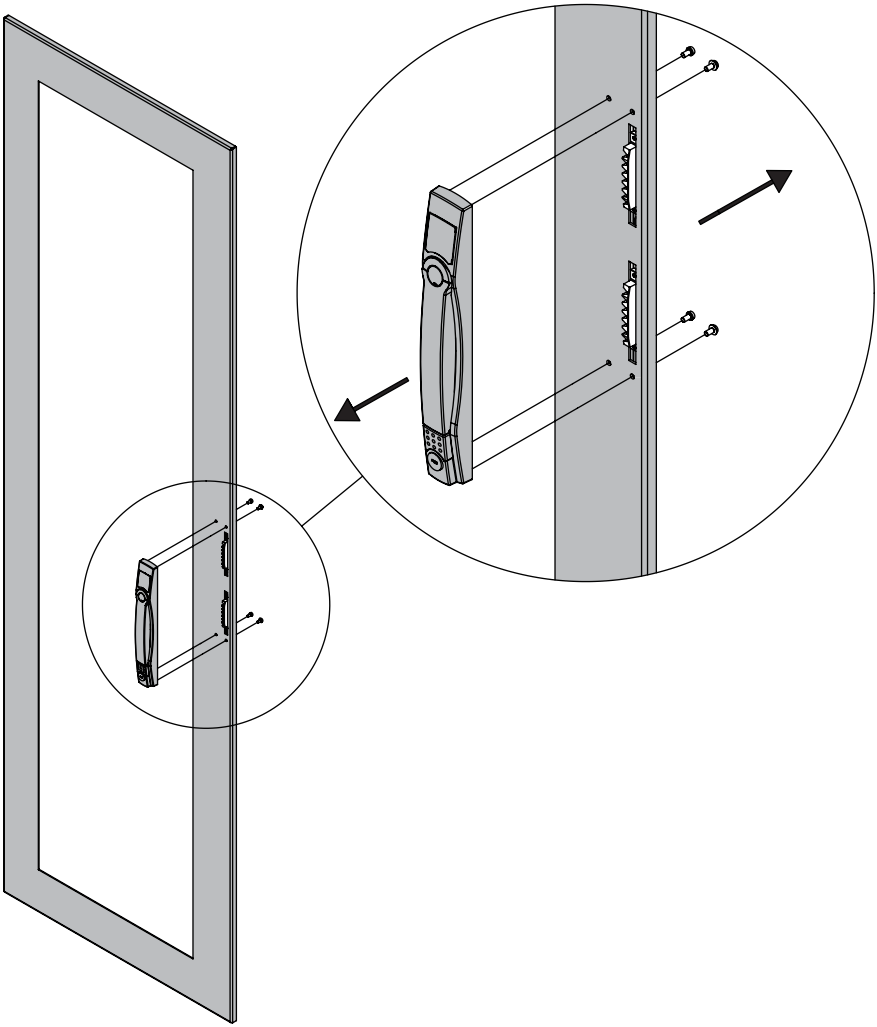

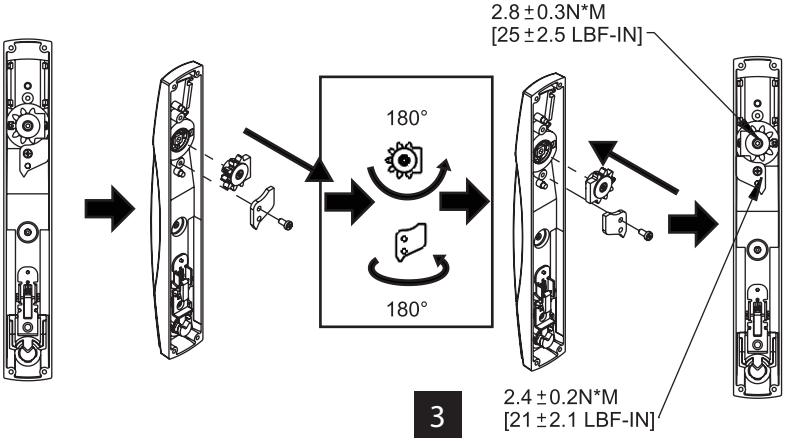

3

© 2018 Hoffman Enclosures Inc.

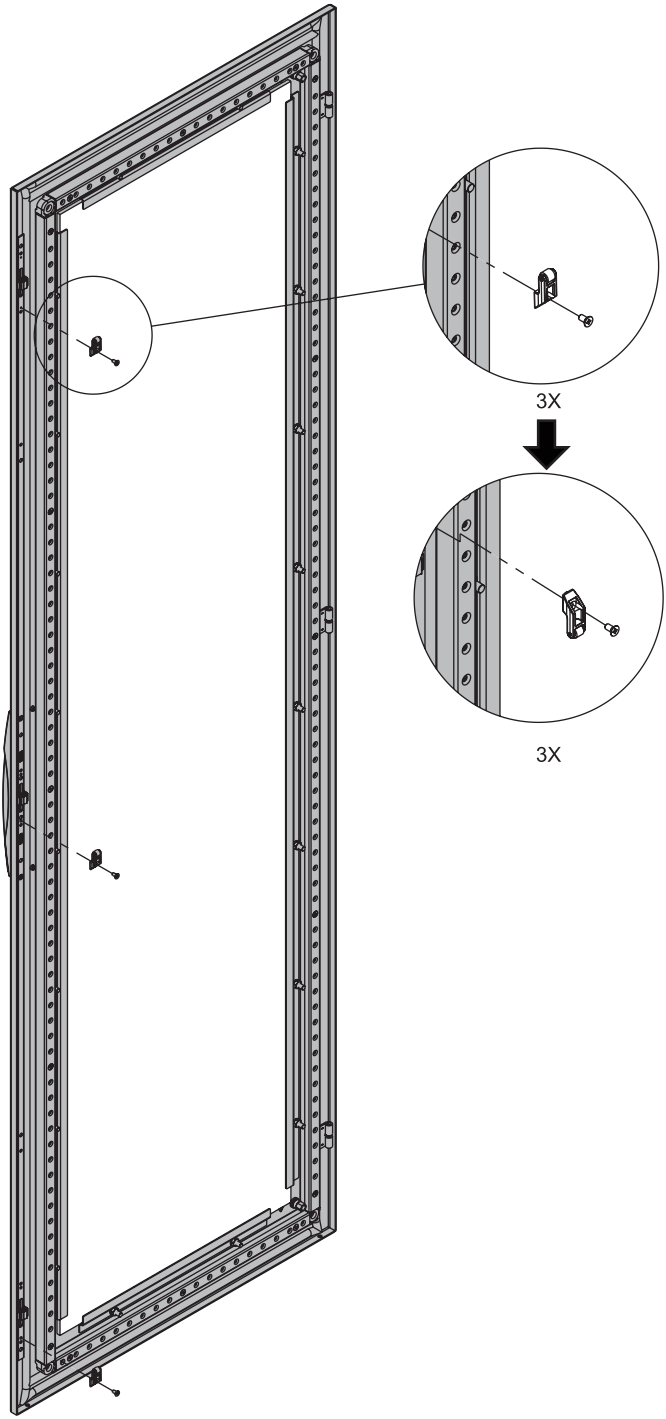

4

© 2018 Hoffman Enclosures Inc.

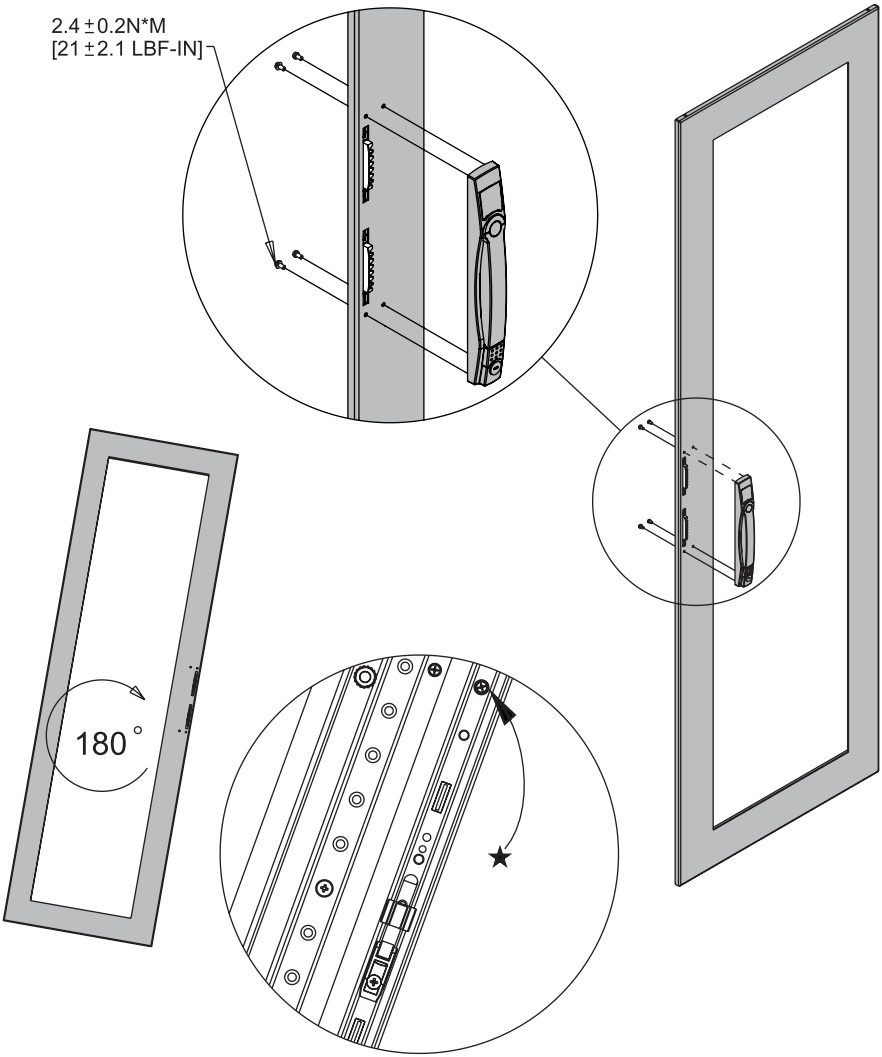

5

© 2018 Hoffman Enclosures Inc.

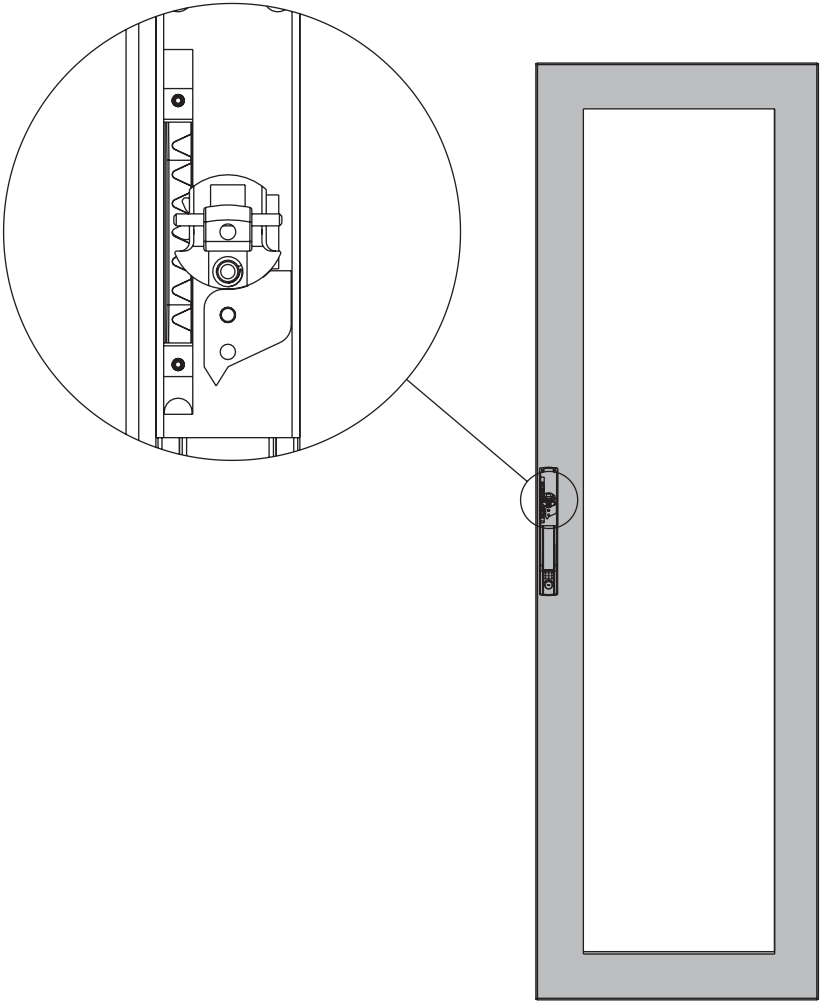

6

© 2018 Hoffman Enclosures Inc.

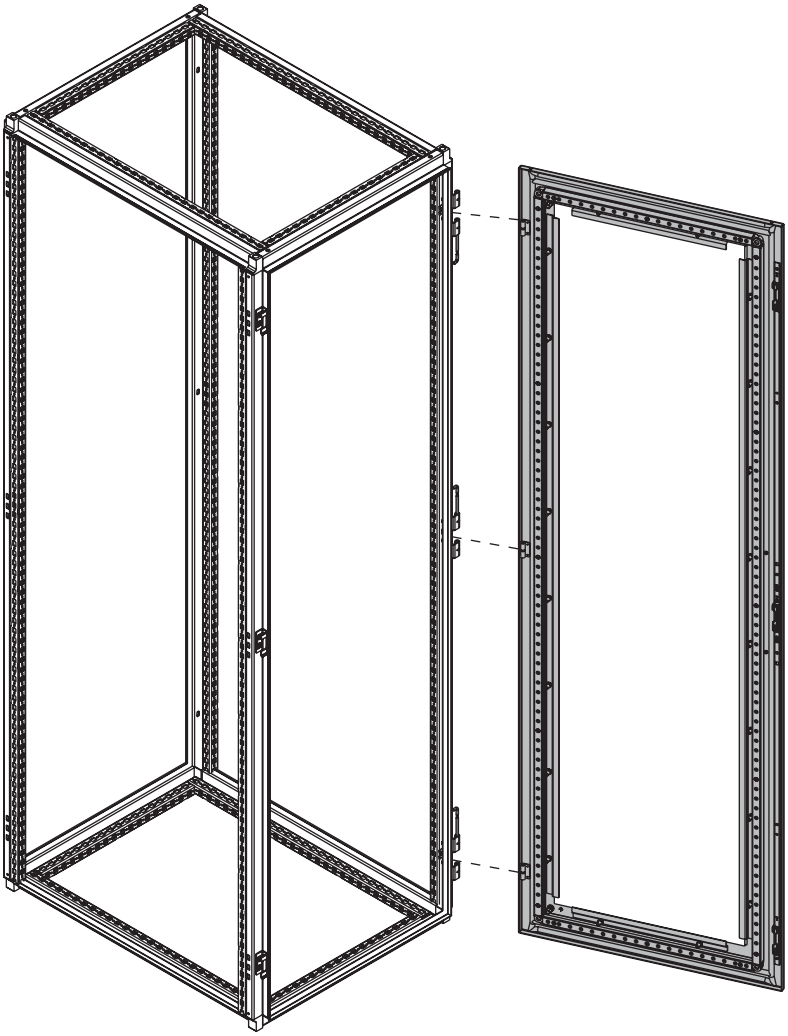

7

© 2018 Hoffman Enclosures Inc.

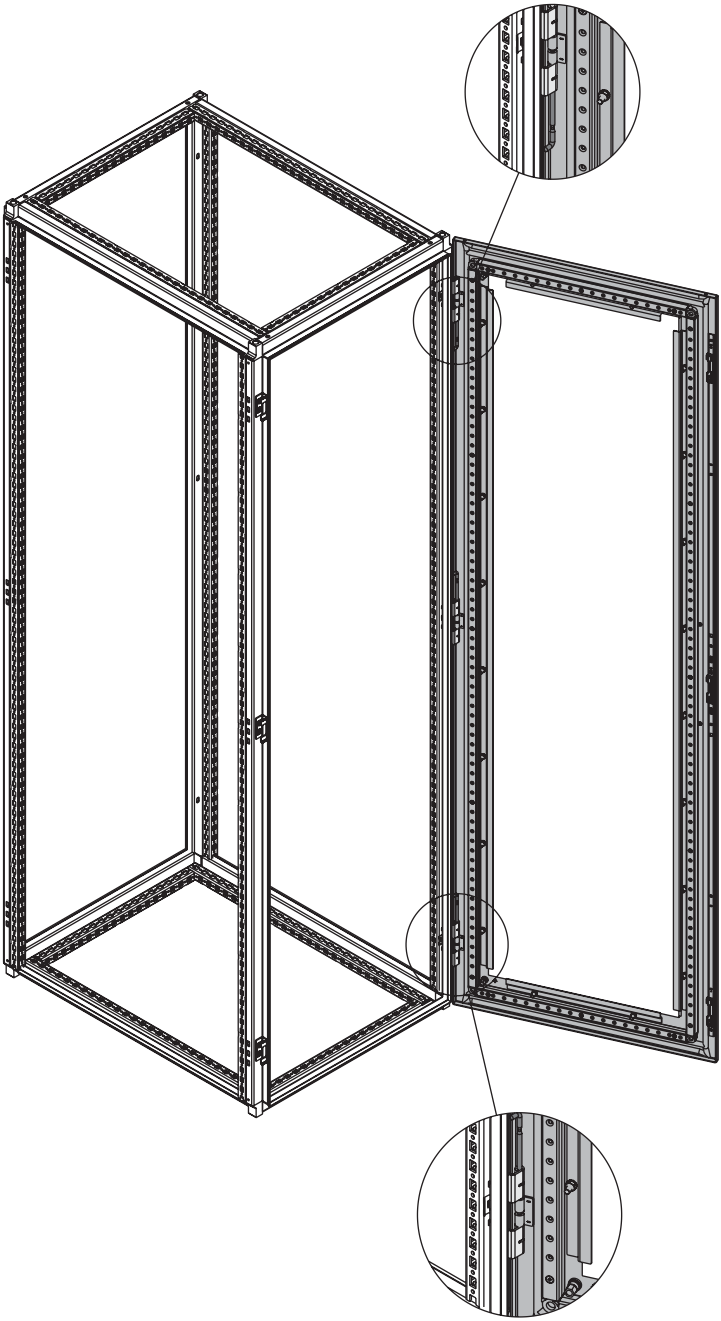

2X

8

© 2018 Hoffman Enclosures Inc.

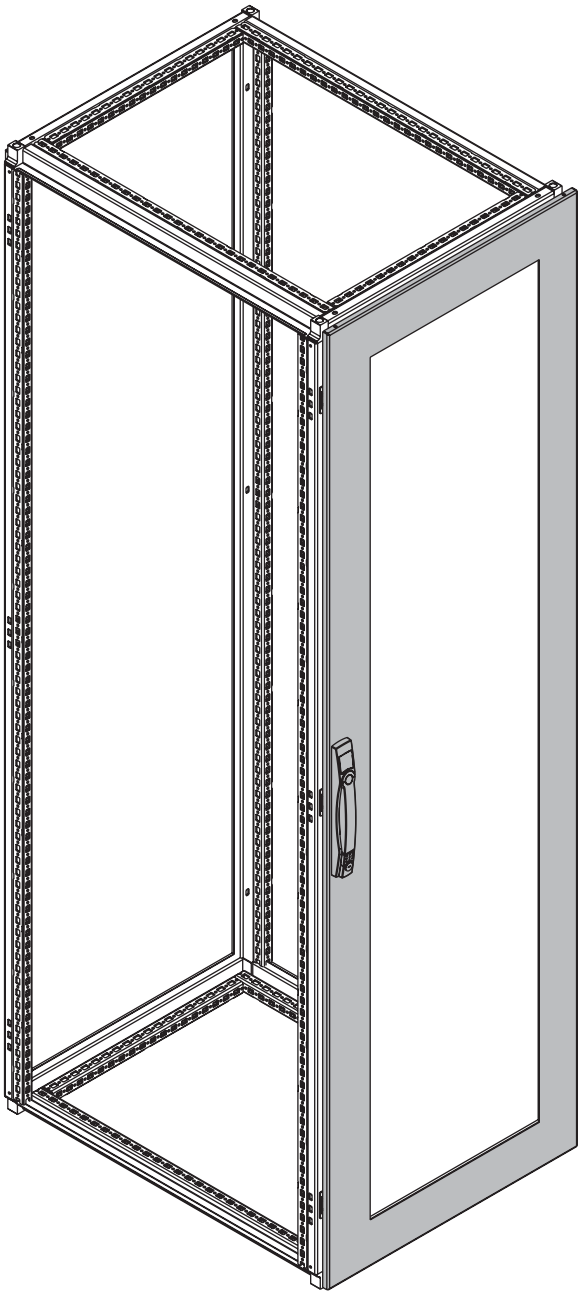

9

© 2018 Hoffman Enclosures Inc.