SMALL-VOLUME TYPE Y AND Z PURGING/PRESSURIZATION SYSTEM

INDUSTRY STANDARDS

For A1001YZUMC1 (Volume up to 2 cubic feet)
NEC **Type Y** Class I, Division 1, Groups A, B, C and D to Division 2
NEC **Type Z** Class I, Division 2, Groups A, B, C and D to Unclassified

Classified by Underwriters Laboratories, cUL and Factory Mutual

For A1001YZUMC2 (Volume up to 10 cubic feet)
NEC **Type Y** Class II, Division 1, Groups F and G to Division 2
NEC **Type Z** Class II, Division 2, Groups F and G to Unclassified

Classified by Underwriters Laboratories, cUL and Factory Mutual

APPLICATION

Small-Volume Purging/Pressurization Systems are an alternative to NEMA Type 7 or 9 enclosures. The C1 model allows general-purpose enclosures, up to two cubic feet, to be used in certain Class 1 hazardous locations. The C2 model allows general purpose enclosures, up to 10 cubic feet, to be used in certain Class 2 hazardous locations.

SPECIFICATIONS

- Universal mount
- Available in two models for enclosures with a maximum enclosure volume of up to 2 or 10 cubic feet
- Mounting plate: Type 316 brushed stainless steel
- Regulator body: zinc with enamel finish
- Enclosure pressure gauge: aluminum with enamel finish
- Polycarbonate regulator handle
- Fastener hardware available in aluminum and stainless steel
- Includes tamper-proof regulator with gauge (TR-10G) to comply with NFPA standard requiring protection against overpressurization

Note: Pressure Vent not required when inlet pressure limited to 5PSI using standard TR-10G. For inlet pressure over 5PSI order EPV-1-SA-00 or EPV-1-SA-90 separately. Contact Hoffman for pricing.

PROTECTED ENCLOSURES

Enclosures should be constructed from materials such as metal, fiberglass or polycarbonate material to meet or exceed NEMA Type 4, Type 4X or Type 12 performance requirements.

CLASS RATINGS

Classes define the explosive or ignitable substances that are present in the atmosphere.
Class I Flammable gases or liquid vapors
Class II Ignitable metal, carbon or organic dusts
Class III Ignitable fibrous materials

GROUP RATINGS

Groups define substances by rating their explosive or ignitable nature in relation to other known substances.

DIVISION RATINGS

Divisions define the degree of hazard by determining an explosive or ignitable substance's expected concentration in the atmosphere.
Division 1 Contains substances under normal conditions
Division 2 Contains substances under abnormal conditions

TYPICAL CLASS I SUBSTANCES

Group A Acetylene
Group B Hydrogen or >30% hydrogen by volume
Group C Ethyl, ether and ethylene
Group D Propane

TYPICAL CLASS II SUBSTANCES

Group E Aluminum, magnesium and alloys
Group F Carbon, coke and coal
Group G Flour, grain, wood, plastic and chemicals

NOTES

Division 1 areas must be surrounded by Division 2 areas.
Class II, Group E areas must be rated as Division 1 areas.

MODIFICATION AND CUSTOMIZATION

Hoffman excels at modifying and customizing products to your specifications. Contact your local Hoffman sales office or distributor for complete information.

BULLETIN: HL

Standard Product

Catalog Number	Model	Height in./mm	Width in./mm	Depth in./mm	Volume (ft.^{3})	Volume (m^3)	Weight (lb.)	Weight (kg)
A1001YZUMC1	1001, Class 1	9.00 229	9.00 229	5.00 127	2	.06	8.25	3.74
A1001YZUMC2	1001, Class 2	9.00 229	9.00 229	5.00 127	10	.28	8.50	3.86
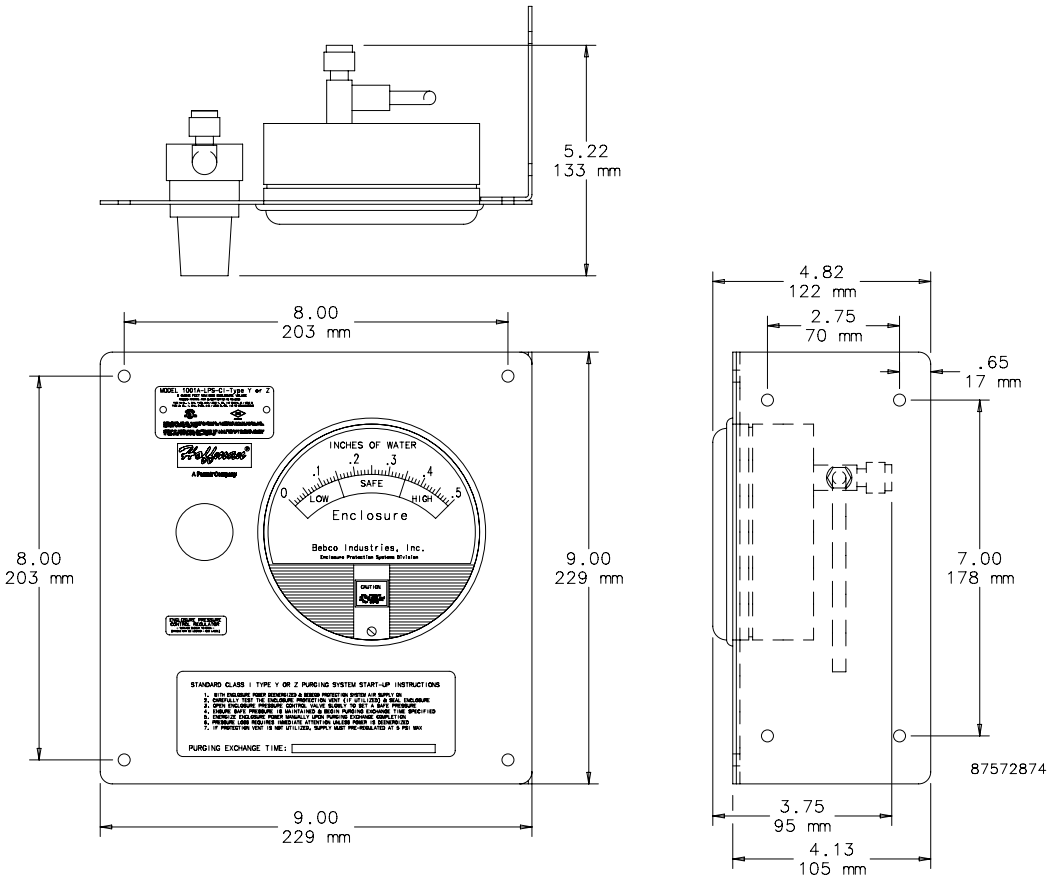
Model 1001 Configuration System and Flange Dimensions