STAINLESS STEEL CONSOLETS, TYPE 12

INDUSTRY STANDARDS

UL 508A Listed; Type 12, 13; File Number E61997
cUL Listed per CSA C22.2 No 94; Type 12, 13; File Number E61997

NEMA/EEMAC Type 12
IEC 60529, IP65

APPLICATION

Consolets are ideal for mounting small control or instrumentation devices where the desirable access requires a 30- or 60-degree surface. These enclosures can be mounted on either of two sides for placement on desktops, pedestals or other flat surfaces.

SPECIFICATIONS

- Type 304 stainless steel
- Seams continuously welded and ground smooth
- Captivated cover screws thread into sealed wells
- Cover attached with continuous hinge
- Oil-resistant gasket
- Bonding provision on door

FINISH

Cover and sides of body have smooth #4 brushed finish.

ACCESSORIES

See also Accessories.
Industrial Corrosion Inhibitors
Steel and Stainless Steel Window Kits
Pedestals
Hole Seals

MODIFICATION AND CUSTOMIZATION

Hoffman excels at modifying and customizing products to your specifications. Contact your local Hoffman sales office or distributor for complete information.

BULLETIN: C5S

Standard Product

Catalog Number	AxBxC in./mm	E in./mm	H in./mm	J in./mm	K in./mm	L in./mm	N in./mm
C8C8SS	8.00 x 8.00 x 7.09 203 x 203 x 180	5.62 143	8.28 210	8.28 210	7.50 191	6.62 168	7.44 189
C8C12SS	8.00 x 12.00 x 7.09 203 x 305 x 180	5.62 143	8.28 210	12.28 312	11.50 292	6.62 168	7.44 189
C8C16SS	8.00 x 16.00 x 7.09 203 x 406 x 180	5.62 143	8.28 210	16.28 414	15.50 394	6.62 168	7.44 189
C8C20SS	8.00 x 20.00 x 7.09 203 x 508 x 180	5.62 143	8.28 210	20.28 515	19.50 495	6.62 168	7.44 189
C12C12SS	12.00 x 12.00 x 9.09 305 x 305 x 231	7.62 194	12.28 312	12.28 312	11.50 292	10.62 270	10.91 277
C12C16SS	12.00 x 16.00 x 9.09 305 x 406 x 231	7.62 194	12.28 312	16.28 414	15.50 394	10.62 270	10.91 277
C12C20SS	12.00 x 20.00 x 9.09 305 x 508 x 231	7.62 194	12.28 312	20.28 515	19.50 495	10.62 270	10.91 277
C12C24SS	12.00 x 24.00 x 9.09 305 x 610 x 231	7.62 194	12.28 312	24.28 617	23.50 597	10.62 270	10.91 277
C16C16SS	16.00 x 16.00 x 11.09 406 x 406 x 282	9.62 244	16.28 414	16.28 414	15.50 394	14.62 371	14.38 365
C16C20SS	16.00 x 20.00 x 11.09 406 x 508 x 282	9.62 244	16.28 414	20.28 515	19.50 495	14.62 371	14.38 365
C16C24SS	16.00 x 24.00 x 11.09 406 x 610 x 282	9.62 244	16.28 414	24.28 617	23.50 597	14.62 371	14.38 365
C16C30SS	16.00 x 30.00 x 11.09 406 x 762 x 282	9.62 244	16.28 414	30.28 769	29.50 749	14.62 371	14.38 365
C16C36SS	16.00 x 36.00 x 11.09 406 x 914 x 282	9.62 244	16.28 414	36.28 922	35.50 902	14.62 371	14.38 365
C20C20SS	20.00 x 20.00 x 13.09 508 x 508 x 332	11.62 295	20.28 515	20.28 515	18.62 473	18.62 473	17.84 453
C20C24SS	20.00 x 24.00 x 13.09 508 x 610 x 332	11.62 295	20.28 515	24.28 617	22.62 575	18.62 473	17.84 453
C20C30SS	20.00 x 30.00 x 13.09 508 x 762 x 332	11.62 295	20.28 515	30.28 769	28.62 727	18.62 473	17.84 453

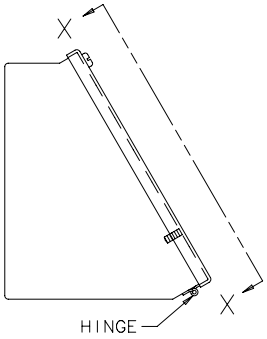

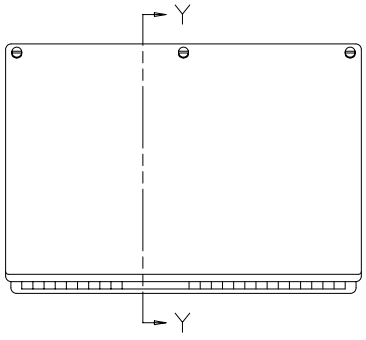

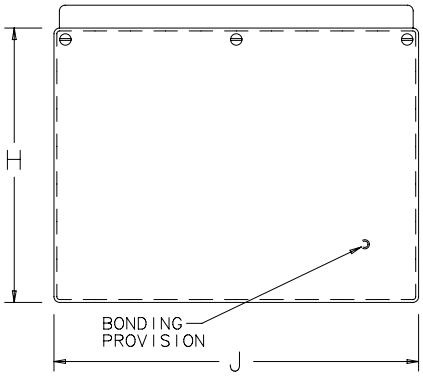

VIEW X-X

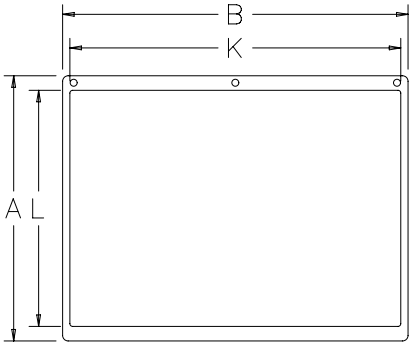

VIEW X-X
with cover removed

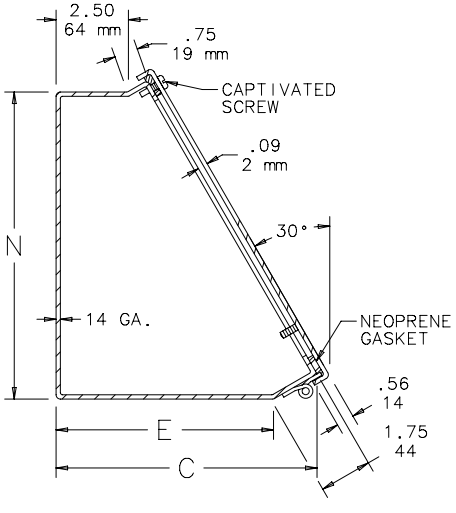

SECTION Y-Y

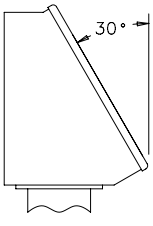

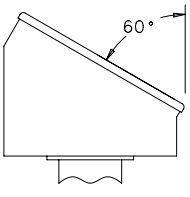

87794845