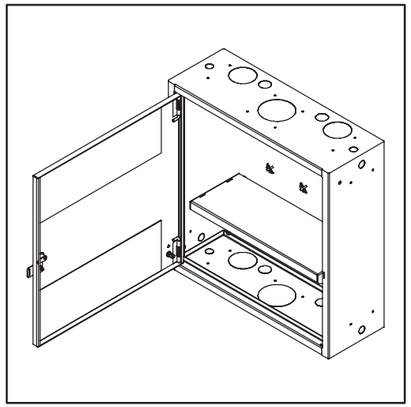

D-Box™

Shelf
Étagère
Estante

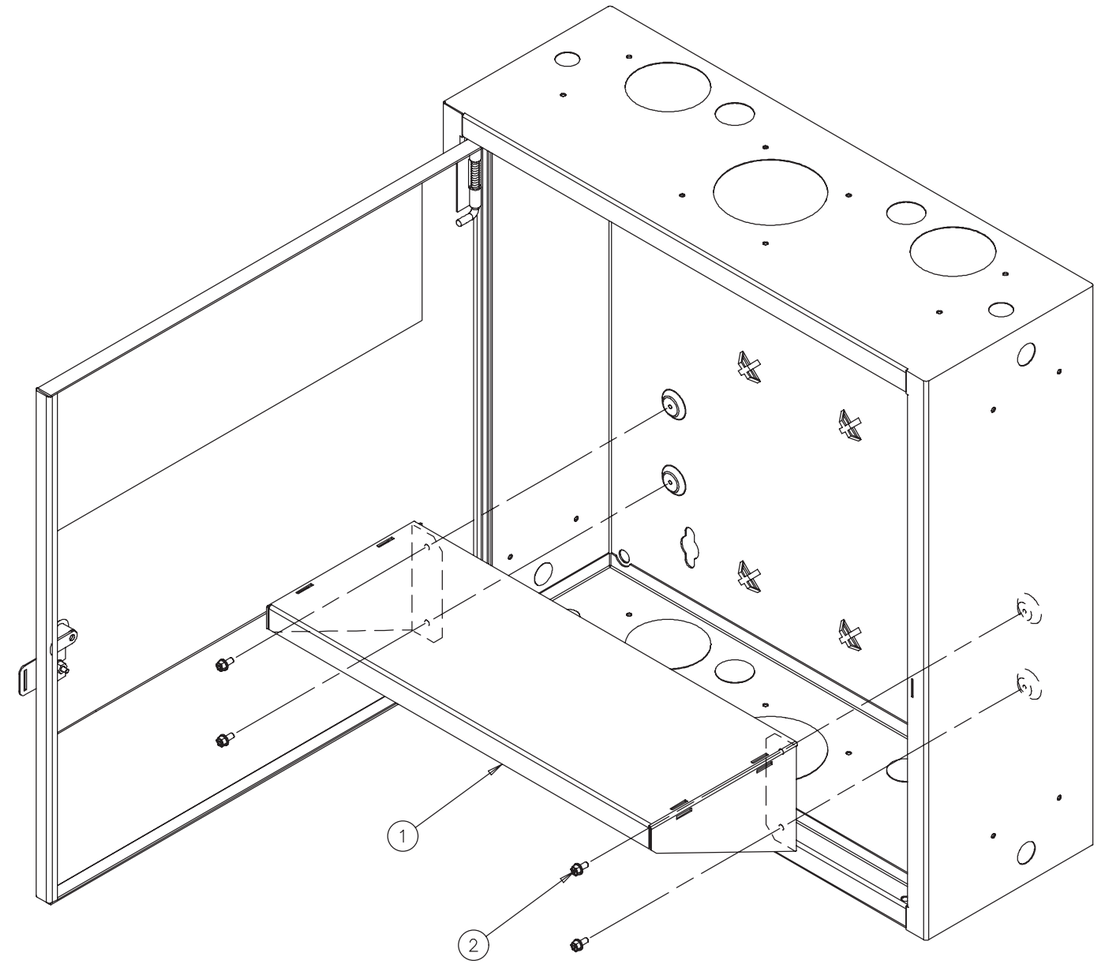

1 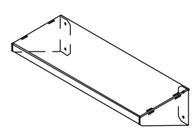	1x
2 M5x10 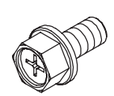	4x

© 2018 Hoffman Enclosures Inc.
PH 763 422 2211 • nVent.com/HOFFMAN
P/N 87785759