nVent CADDY

DROP-IN LOOP HANGER

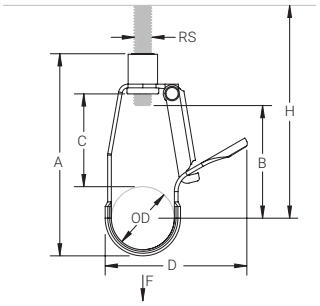

FEATURES

- Next generation loop hanger revolutionizes the installation of pipe
- Once on the guide arm, the weight of the pipe opens the self-closing latch and effortlessly guides the pipe into place
- Integrated rubber sleeve is designed to provide additional grip when adjusting hanger height and reduce hanger rotation around the barrel nut
- Eliminates the need to disassemble the hanger during installation
- Allows prefabrication of complex assemblies with fittings, sprinkler heads, and branch lines that previously could not be installed in one piece
- Designed to reduce overhead work for a safer, less strenuous installation

Part Number	Pipe Size	Outer Diameter (OD)	Rod Size RS	A	B	C	D	Installation Height H	Static Load F
DH0100EG	1"	1.315"	3/8"	4 3/8"	2 9/16"	2 3/16"	3"	3 1/2" Min	300 lb
DH0125EG	1 1/4"	1.660"	3/8"	5"	3 1/8"	2 1/2"	3 9/16"	4 1/8" Min	300 lb
DH0150EG	1 1/2"	1.900"	3/8"	5 1/2"	3 7/16"	2 3/4"	3 15/16"	4 3/8" Min	300 lb
DH0200EG	2"	2.375"	3/8"	6 7/16"	4 1/8"	3 1/4"	4 15/16"	5 1/4" Min	300 lb

DROP-IN LOOP HANGER SURGE RESTRAINT

Part Number	Pipe Size	Height
SR0100EG	1"	2.77"
SR0125EG	1 1/4"	3.08"
SR0150EG	1 1/2"	3.30"
SR0200EG	2"	3.85"

nVent

Our powerful portfolio of brands:

CADDY ERICO HOFFMAN RAYCHEM SCHROFF TRACER

WARNING:
nVent products shall be installed and used only as indicated in nVent product instruction sheets and training materials. Instruction sheets are available at nVent.com/ERICO and from your nVent customer service representative. Improper installation, misuse, misapplication or other failure to completely follow nVent instructions and warnings may cause product malfunction, property damage, serious bodily injury and/or death, and void your warranty.

©2018 nVent. All nVent marks and logos are owned or licensed by nVent Services GmbH or its affiliates. All other trademarks are the property of their respective owners.
nVent reserves the right to change specifications without notice.