PROLINE G2

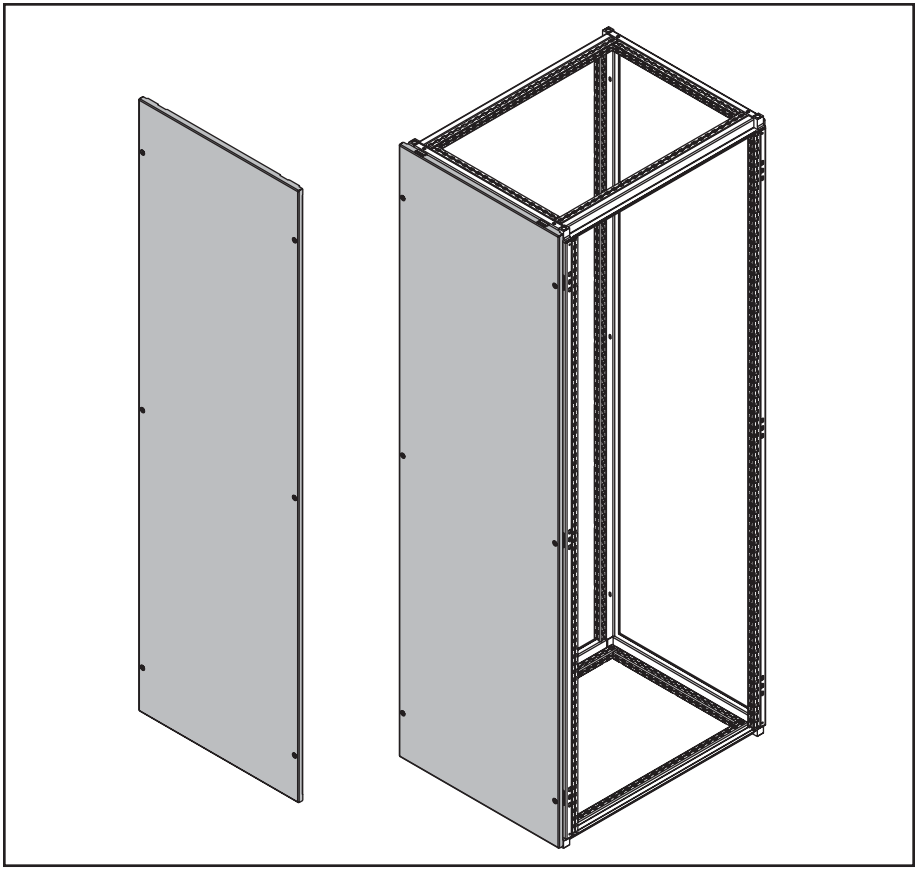

 © 2018 Hoffman Enclosures Inc. PH 763 422 2211 • nVent.com/HOFFMAN P/N 89126368 89126380

1 M6X16 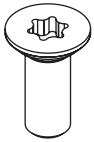 (6x)	2 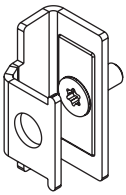 (6x)	3 M6 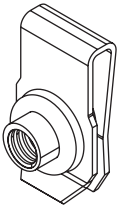 (6x)
4 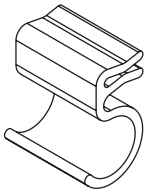 (2x)	5 (1x)	6 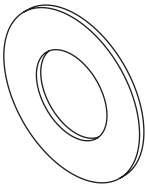 (6x)

© 2018 Hoffman Enclosures Inc.

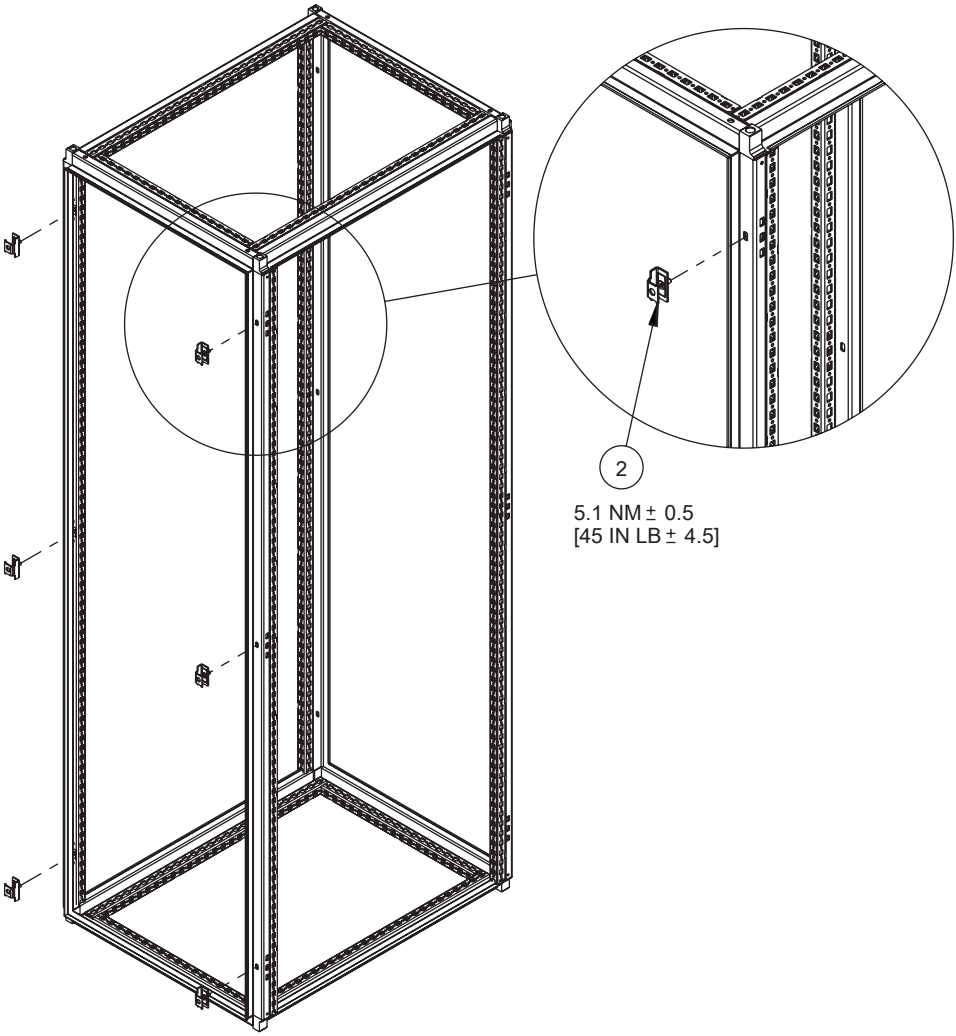

1

© 2018 Hoffman Enclosures Inc.

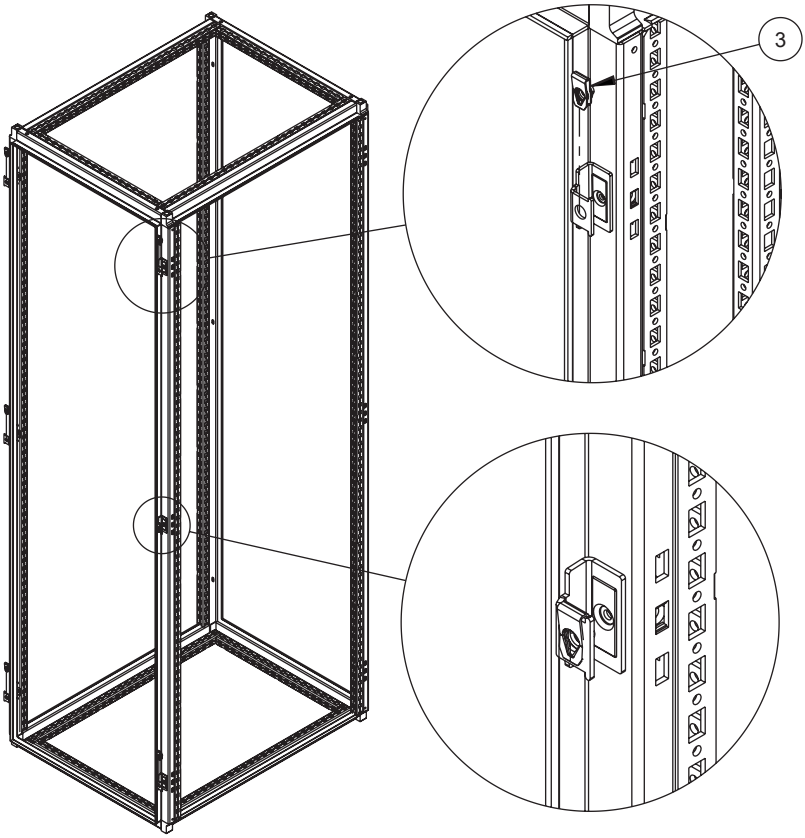

2

© 2018 Hoffman Enclosures Inc.

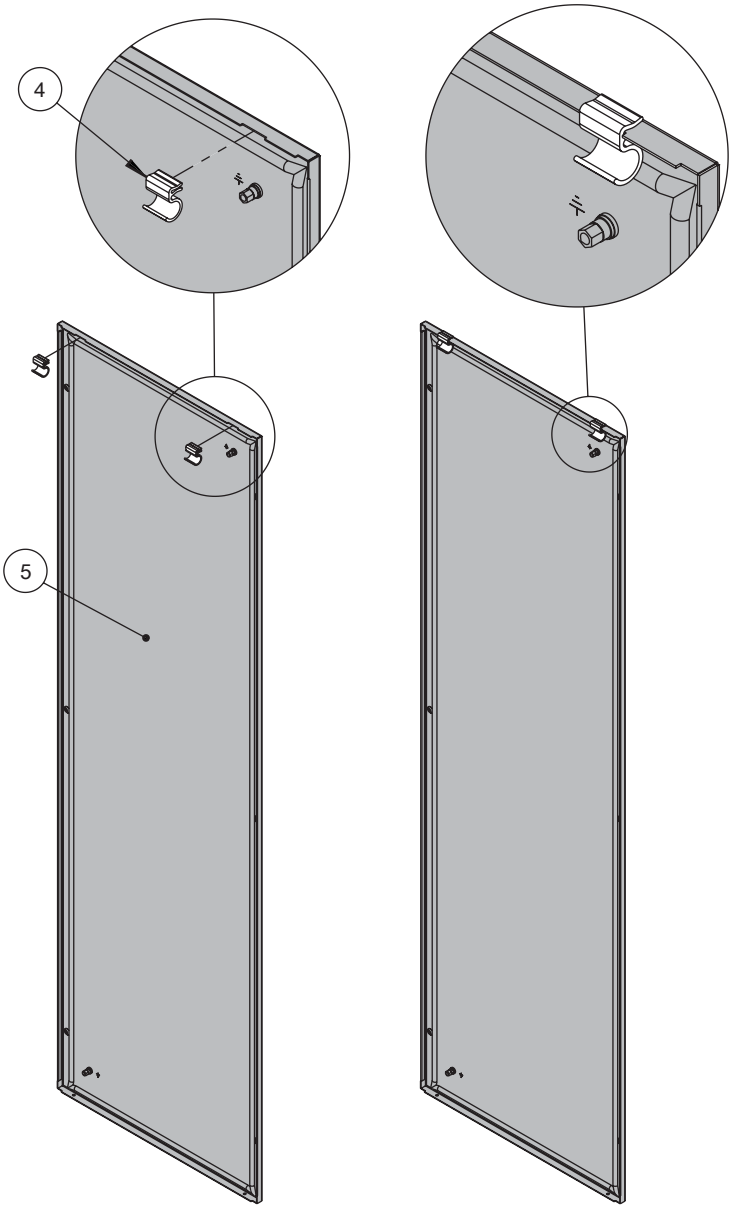

3

© 2018 Hoffman Enclosures Inc.

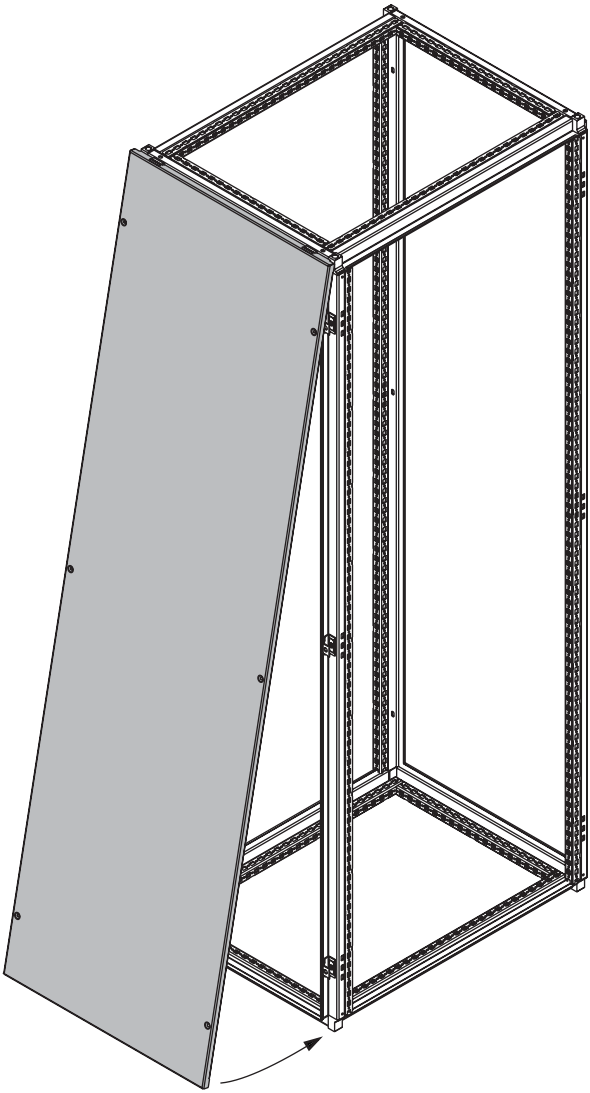

4a

© 2018 Hoffman Enclosures Inc.

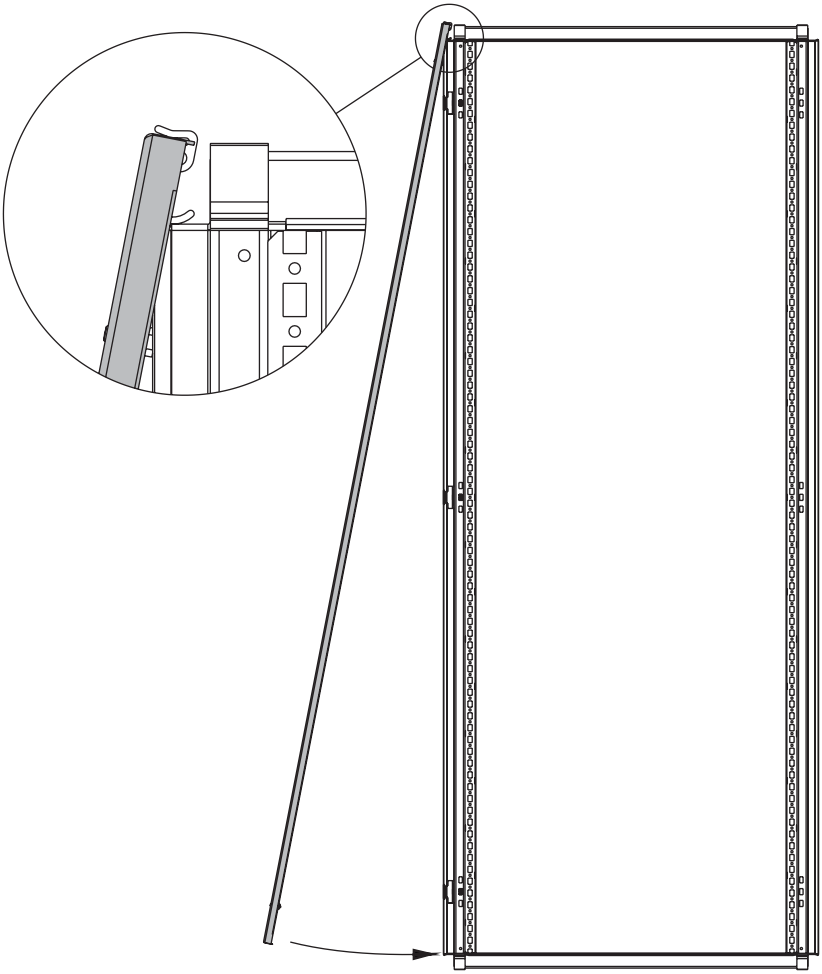

4b

© 2018 Hoffman Enclosures Inc.

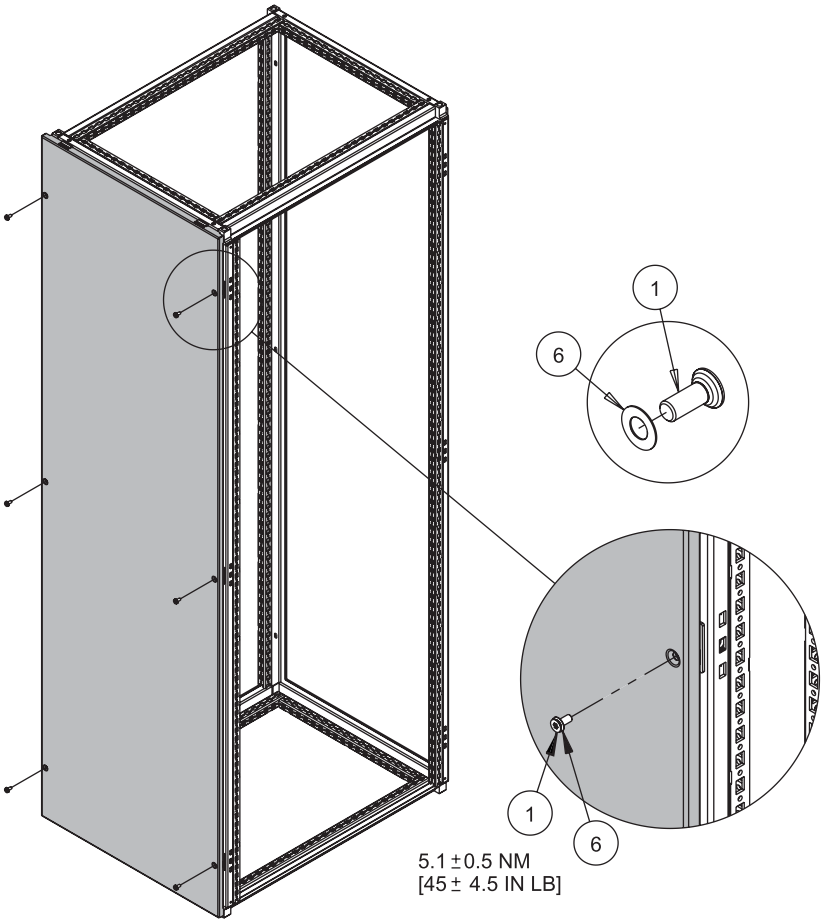

5

© 2018 Hoffman Enclosures Inc.