HAZARDOUS LOCATION CABLE GLANDS FOR NON-ARMORED CABLE (EX D/E/TB)

INDUSTRY STANDARDS

II2GD Ex d IIC Gb, Ex e IIC Gb, Ex tb IIIC Db IP66/68

Approved to Test Standards: IEC/EN 60079-0, IEC/EN 60079-1, IEC/EN 60079-7, IEC/EN 60079-31, UL2225, CAN/CSA-C22.2 No.60079-0, CAN/CSA-C22.2 No.60079-7, CAN/CSA-C22.2 No.60079-31

Ingress Protection: IP66/68 (EN60529)

Certificate No.: IMQ 13 ATEX 018X / IECEx IMQ 13.0006X
Suitable for use in:
- Zone 1 and 2, Gas Group IIC
- Zone 21 and 22, Dust Group IIIC

UL Listing No: E474828. Suitable for use in:
- Class I, Zone 1, AEx e IIC
- Class I, Zone 2, AEx e IIC
- Zone 22, AEX tc IIIC

Other Approvals: EAC, INMETRO, DNV-GL

APPLICATION

Hazloc cable glands provide strain relief, sealing and secure entry of cables into enclosures or electrical equipment in hazardous areas. Suitable for Zone 1, 2, 21 or 22 with ATEX and IEC certifications, these cable glands are reliable to protect critical processes and people where explosive gas and dust may be present. Available in various materials, thread types and sizes, our hazloc cable glands are designed to be used in many applications and under extreme environments.

FEATURES

- Suitable for non-armored cables in flameproof (ex d), increased safety (ex e) and dust (ex tb) applications
- Allow for a wider clamping range in a single gland with three levels of removable seals
- All metric thread cable glands are packaged as kits; each kit includes a chloroprene washer, a locknut and an earthtag
- All NPT thread cable glands are packaged as kits; each kit includes a locknut and an earthtag (except for NPT 3/8 in. cable glands which do not include locknuts or earthtags)

SPECIFICATIONS

- Available in nickel-plated brass material with chloroprene seal and 316L stainless steel material with silicone seal
- Available in Metric (M) and NPT (N) thread type
- Operating temperature from -40 C (-40 F) to 100 C (212 F) with chloroprene seal and -60 C (-76 F) to 130 C (266 F) with silicon seal

BULLETIN: HLY

Standard Product

Catalog Number	Size	Thread Length min. TL (mm)	Thread Length min. TL (in.)	Thread Dia. TD (mm)	Thread Dia. TD (in.)	Outer Dia. min. D2 (mm)	Outer Dia. min. D2 (in.)	Height max. H (mm)	Height max. H (in.)
EBU01MBNCWCLE	M16x1.5	16.0	0.63	16.0	0.63	24.5	0.96	33.0	1.30
EBU1MBNCWCLE	M20x1.5	16.0	0.63	20.0	0.79	24.5	0.96	29.0	1.14
EBU2MBNCWCLE	M25x1.5	16.0	0.63	25.0	0.98	31.0	1.22	32.5	1.28
EBU3MBNCWCLE	M32x1.5	16.0	0.63	32.0	1.26	39.0	1.54	35.0	1.38
EBU4MBNCWCLE	M40x1.5	18.0	0.71	40.0	1.57	49.5	1.95	43.0	1.69
EBU5MBNCWCLE	M50x1.5	18.0	0.71	50.0	1.97	56.0	2.20	46.0	1.81
EBU6MBNCWCLE	M63x1.5	18.0	0.71	63.0	2.48	70.0	2.80	45.0	1.77
EBU01MXSWSLE	M16x1.5	16.0	0.63	16.0	0.63	24.5	0.96	33.0	1.30
EBU1MXSWSLE	M20x1.5	16.0	0.63	20.0	0.79	24.5	0.96	29.0	1.14
EBU2MXSWSLE	M25x1.5	16.0	0.63	25.0	0.98	31.0	1.22	32.5	1.28
EBU3MXSWSLE	M32x1.5	16.0	0.63	32.0	1.26	39.0	1.54	35.0	1.38
EBU4MXSWSLE	M40x1.5	18.0	0.71	40.0	1.57	49.5	1.95	43.0	1.69
EBU5MXSWSLE	M50x1.5	18.0	0.71	50.0	1.97	56.0	2.20	46.0	1.81
EBU6MXSWSLE	M63x1.5	18.0	0.71	63.0	2.48	70.0	2.80	45.0	1.77
EBU01NBNC	NPT3/8 in.	16.0	0.63	17.2	0.68	24.5	0.96	33.0	1.30
EBU1NBNCLE	NPT1/2 in.	16.0	0.63	21.3	0.84	24.5	0.96	29.0	1.14
EBU2NBNCLE	NPT3/4 in.	16.0	0.63	26.7	1.05	31.0	1.22	32.5	1.28
EBU3NBNCLE	NPT1 in.	20.0	0.79	33.4	1.31	39.0	1.54	35.0	1.38
EBU4NBNCLE	NPT1-1/4 in.	20.0	0.79	42.2	1.66	49.5	1.95	43.0	1.69
EBU5NBNCLE	NPT1-1/2 in.	20.0	0.79	48.3	1.90	56.0	2.20	46.0	1.81
EBU6NBNCLE	NPT2 in.	20.0	0.79	60.3	2.38	70.0	2.80	45.0	1.77
EBU01NXS	NPT3/8 in.	16.0	0.63	17.2	0.68	24.5	0.96	33.0	1.30
EBU1NXSLE	NPT1/2 in.	16.0	0.63	21.3	0.84	24.5	0.96	29.0	1.14
EBU2NXSLE	NPT3/4 in.	16.0	0.63	26.7	1.05	31.0	1.22	32.5	1.28
EBU3NXSLE	NPT1 in.	20.0	0.79	33.4	1.31	39.0	1.54	35.0	1.38
EBU4NXSLE	NPT1-1/4 in.	20.0	0.79	42.2	1.66	49.5	1.95	43.0	1.69
EBU5NXSLE	NPT1-1/2 in.	20.0	0.79	48.3	1.90	56.0	2.20	46.0	1.81
EBU6NXSLE	NPT2 in.	20.0	0.79	60.3	2.38	70.0	2.80	45.0	1.77

Additional Specifications

	Spanner Width											
Catalog Number	S1+S2+S3 (mm)	S1+S2+S3 (in.)	S1+S2 (mm)	S1+S2 (in.)	S1 (mm)	S1 (in.)	Cap SW (mm)	Cap SW (in.)	Body SW (mm)	Body SW (in.)	Material	Sealing
EBU01MBNCWCLE	4-6	0.16-0.24	6-9	0.24-0.35	9-12	0.35-0.47	22.0	0.87	22.0	0.87	Nickel-plated Brass	Chloroprene
EBU1MBNCWCLE	4-6	0.16-0.24	6-9	0.24-0.35	9-12	0.35-0.47	22.0	0.87	22.0	0.87	Nickel-plated Brass	Chloroprene
EBU2MBNCWCLE	10-12	0.39-0.47	12-14.5	0.47-0.57	14.5-18	0.57-0.71	28.0	1.10	28.0	1.10	Nickel-plated Brass	Chloroprene
EBU3MBNCWCLE	14-17	0.55-0.67	17-20	0.67-0.79	20-24	0.79-0.94	35.0	1.38	35.0	1.38	Nickel-plated Brass	Chloroprene
EBU4MBNCWCLE	22-24	0.87-0.94	24-27	0.94-1.06	27-32	1.06-1.26	45.0	1.77	45.0	1.77	Nickel-plated Brass	Chloroprene
EBU5MBNCWCLE	26-28	1.02-1.10	28-31	1.1-1.22	31-35	1.22-1.38	50.0	1.97	55.0	2.17	Nickel-plated Brass	Chloroprene
EBU6MBNCWCLE	35-38	1.38-1.50	38-41	1.5-1.61	41-45	1.61-1.77	64.0	2.52	68.0	2.68	Nickel-plated Brass	Chloroprene
EBU01MXSWSLE	4-6	0.16-0.24	6-9	0.24-0.35	9-12	0.35-0.47	22.0	0.87	22.0	0.87	Stainless Steel	Silicone
EBU1MXSWSLE	4-6	0.16-0.24	6-9	0.24-0.35	9-12	0.35-0.47	22.0	0.87	22.0	0.87	Stainless Steel	Silicone
EBU2MXSWSLE	10-12	0.39-0.47	12-14.5	0.47-0.57	14.5-18	0.57-0.71	28.0	1.10	28.0	1.10	Stainless Steel	Silicone
EBU3MXSWSLE	14-17	0.55-0.67	17-20	0.67-0.79	20-24	0.79-0.94	35.0	1.38	35.0	1.38	Stainless Steel	Silicone
EBU4MXSWSLE	22-24	0.87-0.94	24-27	0.94-1.06	27-32	1.06-1.26	45.0	1.77	45.0	1.77	Stainless Steel	Silicone
EBU5MXSWSLE	26-28	1.02-1.10	28-31	1.1-1.22	31-35	1.22-1.38	50.0	1.97	55.0	2.17	Stainless Steel	Silicone
EBU6MXSWSLE	35-38	1.38-1.50	38-41	1.5-1.61	41-45	1.61-1.77	64.0	2.52	68.0	2.68	Stainless Steel	Silicone
EBU01NBNC	4-6	0.16-0.24	6-9	0.24-0.35	9-12	0.35-0.47	22.0	0.87	22.0	0.87	Nickel-plated Brass	Chloroprene
EBU1NBNCLE	4-6	0.16-0.24	6-9	0.24-0.35	9-12	0.35-0.47	22.0	0.87	22.0	0.87	Nickel-plated Brass	Chloroprene
EBU2NBNCLE	10-12	0.39-0.47	12-14.5	0.47-0.57	14.5-18	0.57-0.71	28.0	1.10	28.0	1.10	Nickel-plated Brass	Chloroprene
EBU3NBNCLE	14-17	0.55-0.67	17-20	0.67-0.79	20-24	0.79-0.94	35.0	1.38	35.0	1.38	Nickel-plated Brass	Chloroprene
EBU4NBNCLE	22-24	0.87-0.94	24-27	0.94-1.06	27-32	1.06-1.26	45.0	1.77	45.0	1.77	Nickel-plated Brass	Chloroprene
EBU5NBNCLE	26-28	1.02-1.10	28-31	1.1-1.22	31-35	1.22-1.38	50.0	1.97	55.0	2.17	Nickel-plated Brass	Chloroprene
EBU6NBNCLE	35-38	1.38-1.50	38-41	1.5-1.61	41-45	1.61-1.77	64.0	2.52	68.0	2.68	Nickel-plated Brass	Chloroprene
EBU01NXS	4-6	0.16-0.24	6-9	0.24-0.35	9-12	0.35-0.47	22.0	0.87	22.0	0.87	Stainless Steel	Silicone
EBU1NXSLE	4-6	0.16-0.24	6-9	0.24-0.35	9-12	0.35-0.47	22.0	0.87	22.0	0.87	Stainless Steel	Silicone
EBU2NXSLE	10-12	0.39-0.47	12-14.5	0.47-0.57	14.5-18	0.57-0.71	28.0	1.10	28.0	1.10	Stainless Steel	Silicone
EBU3NXSLE	14-17	0.55-0.67	17-20	0.67-0.79	20-24	0.79-0.94	35.0	1.38	35.0	1.38	Stainless Steel	Silicone
EBU4NXSLE	22-24	0.87-0.94	24-27	0.94-1.06	27-32	1.06-1.26	45.0	1.77	45.0	1.77	Stainless Steel	Silicone
EBU5NXSLE	26-28	1.02-1.10	28-31	1.1-1.22	31-35	1.22-1.38	50.0	1.97	55.0	2.17	Stainless Steel	Silicone
EBU6NXSLE	35-38	1.38-1.50	38-41	1.5-1.61	41-45	1.61-1.77	64.0	2.52	68.0	2.68	Stainless Steel	Silicone

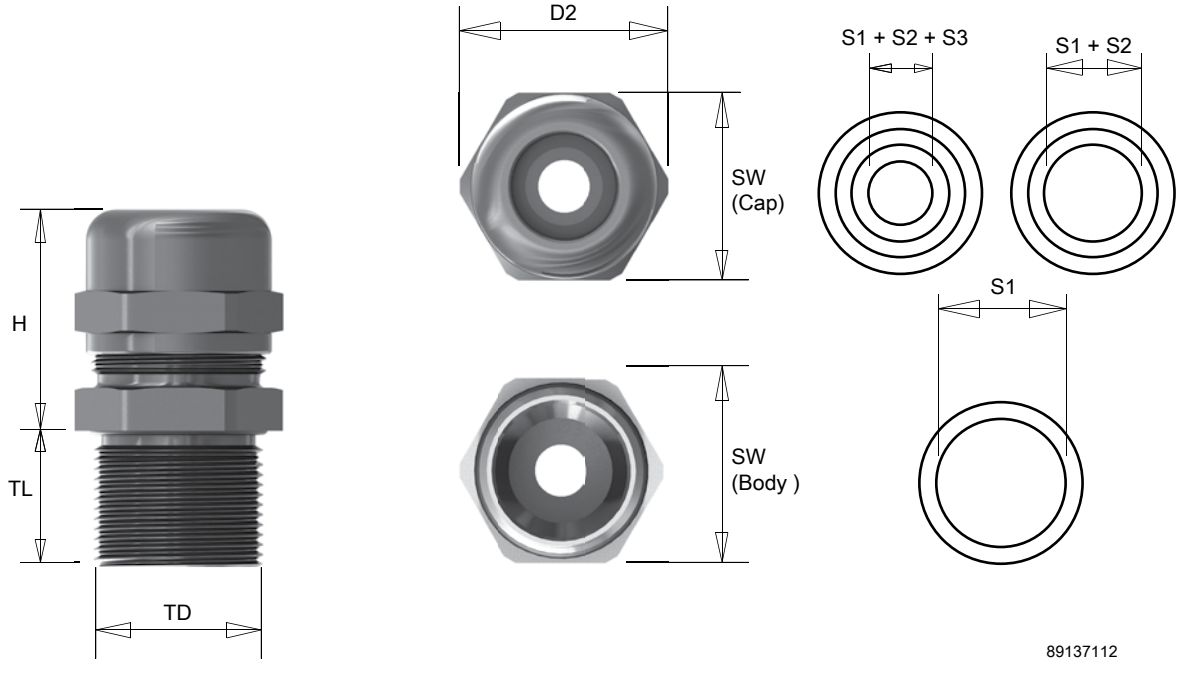

nVent | HOFFMAN

HAZARDOUS LOCATION CABLE GLANDS FOR ARMORED CABLE (EX D/E/TB)

INDUSTRY STANDARDS

II2GD Ex d IIC Gb, Ex e IIC Gb, Ex tb IIIC Db IP66/68

Approved to Test Standards: IEC/EN 60079-0, IEC/EN 60079-1, IEC/EN 60079-7, IEC/EN 60079-31, UL2225, CAN/CSA-C22.2 No.60079-0, CAN/CSA-C22.2 No.60079-7, CAN/CSA-C22.2 No.60079-31

Ingress Protection: IP66/68 (EN60529)

Certificate No.: CESI 13 ATEX 033X / IECEx CES 13.0013X. Suitable for use in:
- Zone 1 and 2, Gas Group IIC
- Zone 21 and 22, Dust Group IIIC

UL Listing No: E474828. Suitable for use in:
- Class I, Zone 1, AEx e IIC
- Class I, Zone 2, AEx e IIC
- Zone 22, AEX tc IIIC

Other Approvals:
EAC, INMETRO, DNV-GL

APPLICATION

Hazloc cable glands provide strain relief, sealing and secure entry of cables into enclosures or electrical equipment in hazardous areas. Suitable for Zone 1, 2, 21 or 22 with ATEX and IEC certifications, these cable glands are reliable to protect critical processes and people where explosive gas and dust may be present. Available in various materials, thread types and sizes, our hazloc cable glands are designed to be used in many applications and under extreme environments.

FEATURES

- Suitable for SWA (steel wire armored), AWA (aluminum wire armored), SWB (steel wire braid), STA (steel tape armored), and shielded cable in flameproof (ex d), increased safety (ex e) and dust (ex tb) applications
- Allow for double sealing of cable and jacket with upper and lower seals
- The swivel retainer and grounding cone are adhered to the gland body by the o-rings to prevent any loose parts; remove by simply pull these components slightly to detach
- All metric thread cable glands are packaged as kits; each kit includes a chloroprene washer, a locknut and an earthtag
- All NPT thread cable glands are packaged as kits; each kit includes a locknut and an earthtag (except for NPT 3/8-in. cable glands which do not include locknuts or earthtags)

SPECIFICATIONS

- Available in nickel-plated brass material with chloroprene seal and 316L stainless steel material with silicone seal
- Available in Metric (M) and NPT (N) thread type
- Operating temperature from -40 C (-40 F) to 100 C (212 F) with chloroprene seal and -60 C (-76 F) to 130 C (266 F) with silicon seal

BULLETIN: HLY

Standard Product

Catalog Number	Size	Thread Length Min. TL (mm)	Thread Length Min. TL (in.)	Thread Dia. TD (mm)	Thread Dia. TD (in.)	Outer Dia. Min. D2 (mm)	Outer Dia. Min. D2 (in.)	Height Max. H (mm)	Height Max. H (in.)	Armor Wire Dia. (mm)	Armor Wire Dia. (in.)	Shielded Wire Dia. (mm)	Shielded Wire Dia. (in.)
KBAU01MBNCWCLE	M16x1.5	16.0	0.63	16.0	0.63	31.5	1.24	52.0	2.05	1.20	0.05	0.50	0.02
KBAU1MBNCWCLE	M20x1.5	16.0	0.63	20.0	0.79	31.5	1.24	51.0	2.01	1.20	0.05	0.50	0.02
KBAU2MBNCWCLE	M25x1.5	18.0	0.71	25.0	0.98	37.0	1.46	56.5	2.22	1.30	0.05	0.70	0.03
KBAU3MBNCWCLE	M32x1.5	18.0	0.71	32.0	1.26	57.0	2.24	80.5	3.17	1.80	0.07	0.70	0.03
KBAU4MBNCWCLE	M40x1.5	18.0	0.71	40.0	1.57	66.0	2.60	101.5	4.00	2.20	0.09	0.70	0.03
KBAU5MBNCWCLE	M50x1.5	18.0	0.71	50.0	1.97	83.0	3.27	102.0	4.02	2.70	0.11	0.90	0.04
KBAU6MBNCWCLE	M63x1.5	20.0	0.79	63.0	2.48	94.0	3.70	110.0	4.33	3.00	0.12	1.00	0.04
KBAU01MXSWSLE	M16x1.5	16.0	0.63	16.0	0.63	31.5	1.24	52.0	2.05	1.20	0.05	0.50	0.02
KBAU1MXSWSLE	M20x1.5	16.0	0.63	20.0	0.79	31.5	1.24	51.0	2.01	1.20	0.05	0.50	0.02
KBAU2MXSWSLE	M25x1.5	18.0	0.71	25.0	0.98	37.0	1.46	56.5	2.22	1.30	0.05	0.70	0.03
KBAU3MXSWSLE	M32x1.5	18.0	0.71	32.0	1.26	57.0	2.24	80.5	3.17	1.80	0.07	0.70	0.03
KBAU4MXSWSLE	M40x1.5	18.0	0.71	40.0	1.57	66.0	2.60	101.5	4.00	2.20	0.09	0.70	0.03
KBAU5MXSWSLE	M50x1.5	18.0	0.71	50.0	1.97	83.0	3.27	102.0	4.02	2.70	0.11	0.90	0.04
KBAU6MXSWSLE	M63x1.5	20.0	0.79	63.0	2.48	94.0	3.70	110.0	4.33	3.00	0.12	1.00	0.04
KBAU01NBNC	NPT3/8 in.	16.0	0.63	17.1	0.67	31.5	1.24	52.0	2.05	1.20	0.05	0.50	0.02
KBAU1NBNCLE	NPT1/2 in.	16.0	0.63	21.3	0.84	31.5	1.24	51.0	2.01	1.20	0.05	0.50	0.02
KBAU2NBNCLE	NPT3/4 in.	18.0	0.83	26.7	1.05	37.0	1.46	56.5	2.22	1.30	0.05	0.50	0.02
KBAU3NBNCLE	NPT1 in.	18.0	0.83	33.4	1.31	57.0	2.24	80.5	3.17	1.80	0.07	0.70	0.03
KBAU4NBNCLE	NPT1-1/4 in.	18.0	1.10	42.2	1.66	66.0	2.60	101.5	4.00	2.20	0.09	0.70	0.03
KBAU5NBNCLE	NPT1-1/2 in.	18.0	1.10	48.3	1.90	83.0	3.27	102.0	4.02	2.70	0.11	0.90	0.04
KBAU6NBNCLE	NPT2 in.	20.0	1.10	60.3	2.38	94.0	3.70	110.0	4.33	3.00	0.12	1.00	0.04
KBAU01NXS	NPT3/8 in.	16.0	0.63	17.1	0.67	31.5	1.24	52.0	2.05	1.20	0.05	0.50	0.02
KBAU1NXSLE	NPT1/2 in.	16.0	0.63	21.3	0.84	31.5	1.24	51.0	2.01	1.20	0.05	0.50	0.02
KBAU2NXSLE	NPT3/4 in.	21.0	0.83	26.7	1.05	37.0	1.46	56.5	2.22	1.30	0.05	0.50	0.02
KBAU3NXSLE	NPT1 in.	21.0	0.83	33.4	1.31	57.0	2.24	80.5	3.17	1.80	0.07	0.70	0.03
KBAU4NXSLE	NPT1-1/4 in.	28.0	1.10	42.2	1.66	66.0	2.60	101.5	4.00	2.20	0.09	0.70	0.03
KBAU5NXSLE	NPT1-1/2 in.	28.0	1.10	48.3	1.90	83.0	3.27	102.0	4.02	2.70	0.11	0.90	0.04
KBAU6NXSLE	NPT2 in.	28.0	1.10	60.3	2.38	94.0	3.70	110.0	4.33	3.00	0.12	1.00	0.04

Additional Specifications

	Clamping Range Dia.				Spanner Width							
Catalog Number	**D (mm)**	**D (in.)**	**D1 (mm)**	**D1 (in.)**	Cap SW (mm)	Cap SW (in.)	Upper Body SW (mm)	Upper Body SW (in.)	Lower Body SW (mm)	Lower Body SW (in.)	Material	Sealing
KBAU01MBNCWCLE	6.0-12.0	0.24-0.47	8.5-16.0	0.33-0.63	29.0	1.14	29.0	1.14	25.0	0.98	Nickel-plated Brass	Chloroprene
KBAU1MBNCWCLE	6.0-12.0	0.24-0.47	8.5-16.0	0.33-0.63	29.0	1.14	29.0	1.14	25.0	0.98	Nickel-plated Brass	Chloroprene
KBAU2MBNCWCLE	12.0-16.0	0.47-0.63	16.0-21.0	0.63-0.83	34.0	1.34	34.0	1.34	32.0	1.26	Nickel-plated Brass	Chloroprene
KBAU3MBNCWCLE	15.0-26.0	0.59-1.02	20.0-33.0	0.79-1.30	52.0	2.05	52.0	2.05	48.0	1.89	Nickel-plated Brass	Chloroprene
KBAU4MBNCWCLE	20.0-32.0	0.79-1.26	29.0-41.0	1.14-1.61	60.0	2.36	60.0	2.36	55.0	2.17	Nickel-plated Brass	Chloroprene
KBAU5MBNCWCLE	27.0-41.0	1.06-1.61	36.0-52.0	1.42-2.05	74.0	2.91	70.0	2.76	70.0	2.76	Nickel-plated Brass	Chloroprene
KBAU6MBNCWCLE	40.0-52.0	1.57-2.05	47.0-60.0	1.85-2.36	85.0	3.35	85.0	3.35	85.0	3.35	Nickel-plated Brass	Chloroprene
KBAU01MXSWSLE	6.0-12.0	0.24-0.47	8.5-16.0	0.33-0.63	29.0	1.14	29.0	1.14	25.0	0.98	Stainless Steel	Silicone
KBAU1MXSWSLE	6.0-12.0	0.24-0.47	8.5-16.0	0.33-0.63	29.0	1.14	29.0	1.14	25.0	0.98	Stainless Steel	Silicone
KBAU2MXSWSLE	12.0-16.0	0.47-0.63	16.0-21.0	0.63-0.83	34.0	1.34	34.0	1.34	32.0	1.26	Stainless Steel	Silicone
KBAU3MXSWSLE	15.0-26.0	0.59-1.02	20.0-33.0	0.79-1.30	52.0	2.05	52.0	2.05	48.0	1.89	Stainless Steel	Silicone
KBAU4MXSWSLE	20.0-32.0	0.79-1.26	29.0-41.0	1.14-1.61	60.0	2.36	60.0	2.36	55.0	2.17	Stainless Steel	Silicone
KBAU5MXSWSLE	27.0-41.0	1.06-1.61	36.0-52.0	1.42-2.05	74.0	2.91	70.0	2.76	70.0	2.76	Stainless Steel	Silicone
KBAU6MXSWSLE	40.0-52.0	1.57-2.05	47.0-60.0	1.85-2.36	85.0	3.35	85.0	3.35	85.0	3.35	Stainless Steel	Silicone
KBAU01NBNC	6.0-12.0	0.24-0.47	8.5-16.0	0.33-0.63	29.0	1.14	29.0	1.14	25.0	0.98	Nickel-plated Brass	Chloroprene
KBAU1NBNCLE	6.0-12.0	0.24-0.47	8.5-16.0	0.33-0.63	29.0	1.14	29.0	1.14	25.0	0.98	Nickel-plated Brass	Chloroprene
KBAU2NBNCLE	12.0-16.0	0.47-0.63	16.0-21.0	0.63-0.83	34.0	1.34	34.0	1.34	32.0	1.26	Nickel-plated Brass	Chloroprene
KBAU3NBNCLE	15.0-26.0	0.59-1.02	20.0-33.0	0.79-1.30	52.0	2.05	52.0	2.05	48.0	1.89	Nickel-plated Brass	Chloroprene
KBAU4NBNCLE	20.0-32.0	0.79-1.26	29.0-41.0	1.14-1.61	60.0	2.36	60.0	2.36	55.0	2.17	Nickel-plated Brass	Chloroprene
KBAU5NBNCLE	27.0-41.0	1.06-1.61	36.0-52.0	1.42-2.05	74.0	2.91	70.0	2.76	70.0	2.76	Nickel-plated Brass	Chloroprene
KBAU6NBNCLE	40.0-52.0	1.57-2.05	47.0-60.0	1.85-2.36	85.0	3.35	85.0	3.35	85.0	3.35	Nickel-plated Brass	Chloroprene
KBAU01NXS	6.0-12.0	0.24-0.47	8.5-16.0	0.33-0.63	29.0	1.14	29.0	1.14	25.0	0.98	Stainless Steel	Silicone
KBAU1NXSLE	6.0-12.0	0.24-0.47	8.5-16.0	0.33-0.63	29.0	1.14	29.0	1.14	25.0	0.98	Stainless Steel	Silicone
KBAU1NXSLE	12.0-16.0	0.47-0.63	16.0-21.0	0.63-0.83	34.0	1.34	34.0	1.34	32.0	1.26	Stainless Steel	Silicone
KBAU3NXSLE	15.0-26.0	0.59-1.02	20.0-33.0	0.79-1.30	52.0	2.05	52.0	2.05	48.0	1.89	Stainless Steel	Silicone
KBAU4NXSLE	20.0-32.0	0.79-1.26	29.0-41.0	1.14-1.61	60.0	2.36	60.0	2.36	55.0	2.17	Stainless Steel	Silicone
KBAU5NXSLE	27.0-41.0	1.06-1.61	36.0-52.0	1.42-2.05	74.0	2.91	70.0	2.76	70.0	2.76	Stainless Steel	Silicone
KBAU6NXSLE	40.0-52.0	1.57-2.05	47.0-60.0	1.85-2.36	85.0	3.35	85.0	3.35	85.0	3.35	Stainless Steel	Silicone

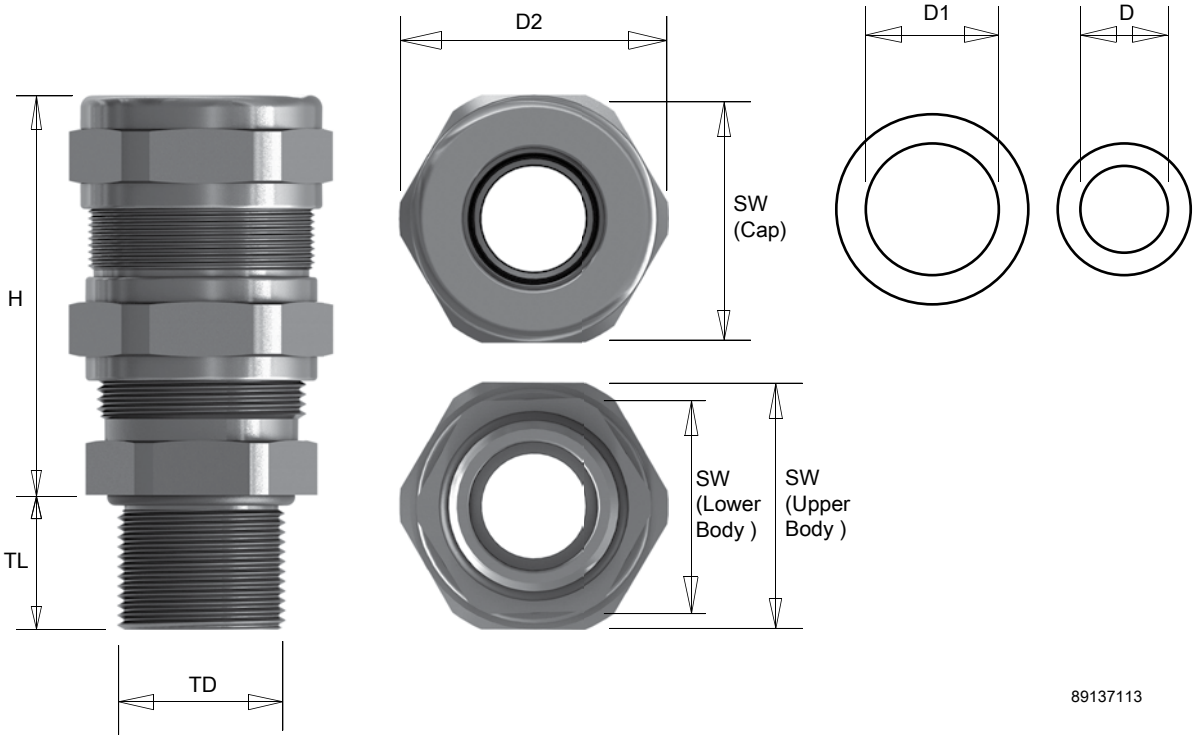

HAZARDOUS LOCATION CABLE GLANDS FOR NON-ARMORED CABLE , NON-ME TALL IC (EX E/TB)

INDUSTRY STANDARDS

II2GD Ex e IIC Gb, Ex tb IIIC Db IP66/68
Approved to Test Standards: IEC/EN 60079-0, IEC/EN 60079-7, IEC/EN 60079-31

Ingress Protection: IP66/68 (EN60529)

Certificate No.: IMQ 13 ATEX 010X / IECEx IMQ 13.0003X. Suitable for use in:
- Zone 1 and 2, Gas Group IIC
- Zone 21 and 22, Dust Group IIIC

Other Approvals:
EAC, INMETRO, DNV-GL

APPLICATION

Hazloc cable glands provide strain relief, sealing and secure entry of cables into enclosures or electrical equipment in hazardous areas. Suitable for Zone 1, 2, 21 or 22 with ATEX and IEC certifications, these cable glands are reliable to protect critical processes and people where explosive gas and dust may be present. Constructed of polyamide 6 and available in various thread types and sizes, our hazloc cable glands are designed to be used in many applications and under extreme environments.

FEATURES

- Suitable for non-armored cables in increased safety (ex e) and dust (ex tb) applications
- Provide high level of protection and reliability in extreme environments with impact resistance of up to 7 Joules
- All metric thread cable glands are packaged as kits. Each kit includes a chloroprene washer and a locknut

SPECIFICATIONS

- Available in polyamide 6 material with chloroprene seal
- Available in Metric (M) and NPT (N) thread type
- Operating temperature from -40 C to 70 C with chloroprene seal

BULLETIN: HLY

Standard Product

Catalog Number	Size	Thread Length min. TL (mm)	Thread Length min. TL (in.)	Thread Dia. TD (mm)	Thread Dia. TD (in.)	Outer Dia. min. D2 (mm)	Outer Dia. min. D2 (in.)	Height min. H (mm)	Height min. H (in.)
HIBMX1CWCL	M16x1.5	10.0	0.39	16.0	0.63	25.0	0.98	21.5	0.85
HIBMX2CWCL	M20x1.5	10.0	0.39	20.0	0.79	27.5	1.08	23.0	0.91
HIBMXEU25CWCL	M25x1.5	10.0	0.39	25.0	0.98	32.5	1.28	27.0	1.06
HIBMXEU32CWCL	M32x1.5	10.0	0.39	32.0	1.26	41.0	1.61	31.0	1.22
HIBNX1C	NPT3/8 in.	15.0	0.59	17.1	0.67	25.0	0.98	21.5	0.85
HIBNX2C	NPT1/2 in.	15.0	0.59	21.3	0.84	27.5	1.08	23.0	0.91
HIBNX3C	NPT3/4 in.	15.0	0.59	26.7	1.05	37.0	1.46	28.0	1.10
HIBNX4C	NPT1 in.	18.0	0.71	33.4	1.31	47.5	1.87	32.5	1.28

Additional Specifications

	Clamping Range Dia.		Spanner Width					
Catalog Number	D (mm)	D (in.)	Cap SW (mm)	Cap SW (in.)	Body SW (mm)	Body SW (in.)	Material	Sealing
HIBMX1CWCL	6.0-10.0	0.24-0.39	22.0	0.87	22.0	0.87	Polyamide	Chloroprene
HIBMX2CWCL	7.0-12.0	0.28-0.47	24.0	0.94	24.0	0.94	Polyamide	Chloroprene
HIBMXEU25CWCL	12.0-17.0	0.47-0.67	29.0	1.14	29.0	1.14	Polyamide	Chloroprene
HIBMXEU32CWCL	16.0-21.0	0.63-0.83	36.0	1.42	36.0	1.42	Polyamide	Chloroprene
HIBNX1C	6.0-10.0	0.24-0.39	22.0	0.87	22.0	0.87	Polyamide	Chloroprene
HIBNX2C	7.0-12.0	0.28-0.47	24.0	0.94	24.0	0.94	Polyamide	Chloroprene
HIBNX3C	14.0-18.0	0.55-0.71	33.0	1.30	33.0	1.30	Polyamide	Chloroprene
HIBNX4C	19.0-25.0	0.75-0.98	42.0	1.65	42.0	1.65	Polyamide	Chloroprene

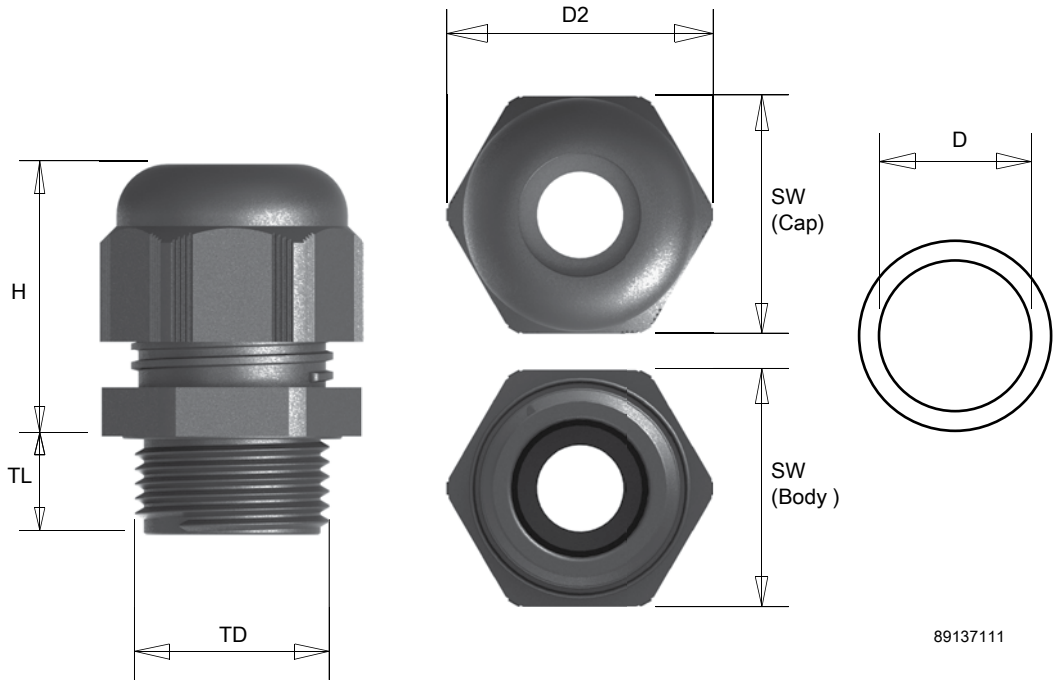
D2
D
SW
(Cap)
H
TL
SW
(Body)
TD
89137111