We connect and protect

Strut to Strut Connector

CATALOG NUMBER

STS

FEATURES

Consists of two halve castings, nut and bolt

Allows for bolting two strut channels back to back through the slots

PRODUCT ATTRIBUTES

Material: Steel

Finish: Electrogalvanized

A: 1 1/4"

B: 1"

C: 1/2"

Torque (TQ): 5 ft·lbf

Static Load (F): 1000lbf

ADDITIONAL PRODUCT DETAILS

Minimum of 2 required. Maximum spacing 1 foot (300mm).

Minimum half-slot dimensions 9/16" x 7/8" (14.3 mm x 22.2 mm).

DIAGRAMS

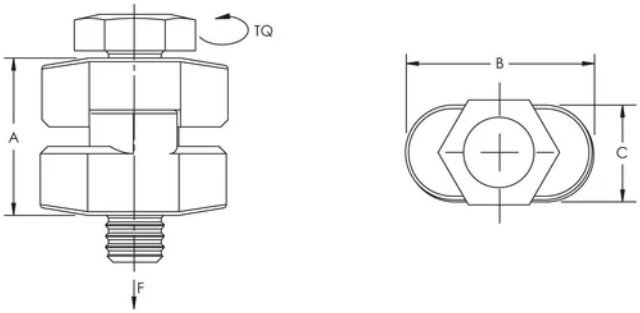

WARNING

nVent products shall be installed and used only as indicated in nVent's product instruction sheets and training materials. Instruction sheets are available at www.nvent.com and from your nVent customer service representative. Improper installation, misuse, misapplication or other failure to completely follow nVent's instructions and warnings may cause product malfunction, property damage, serious bodily injury and death and/or void your warranty.

North America
+1.800.753.9221
Option 1 – Customer Care
Option 2 – Technical Support

Europe
Netherlands:
+31 800-0200135
France:
+33 800 901 793

Europe
Germany:
800 1890272
Other Countries:
+31 13 5835404

APAC
Shanghai:
+ 86 21 2412 1618/19
Sydney:
+61 2 9751 8500

Our powerful portfolio of brands:

CADDY ERICO HOFFMAN ILSCO SCHROFF TRACHTE

©2025 nVent. All nVent marks and logos are owned or licensed by nVent Services GmbH or its affiliates. All other trademarks are the property of their respective owners. nVent reserves the right to change specifications without notice.

This document is system-generated.