Open Frame Rack
Öffnen Sie FeldZahnstange
Ouvrez L'Armoire De Trame
Abra El Estante Del Marco

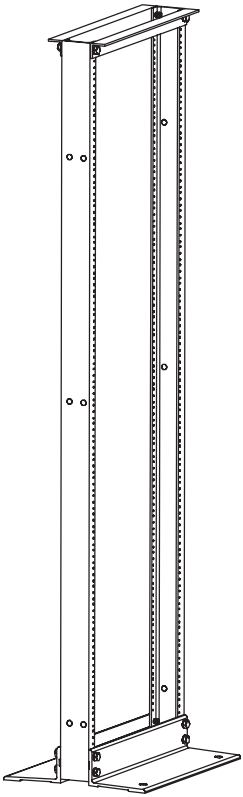

© 2018 Hoffman Enclosures Inc.
PH 763 422 2211 • nVent.com/HOFFMAN
P/N 11359943 87567388

1 3/8–16x1.0

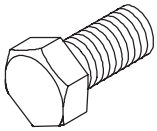

(12x)

2 3/8

(12x)

3

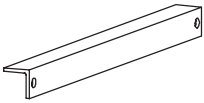

(2x)

4

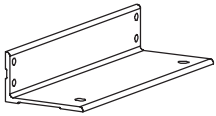

(2x)

5 3/8–16

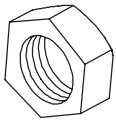

Not required if vertical rail (item 6) is threaded.

(12x)

6

(2x)

© 2018 Hoffman Enclosures Inc.

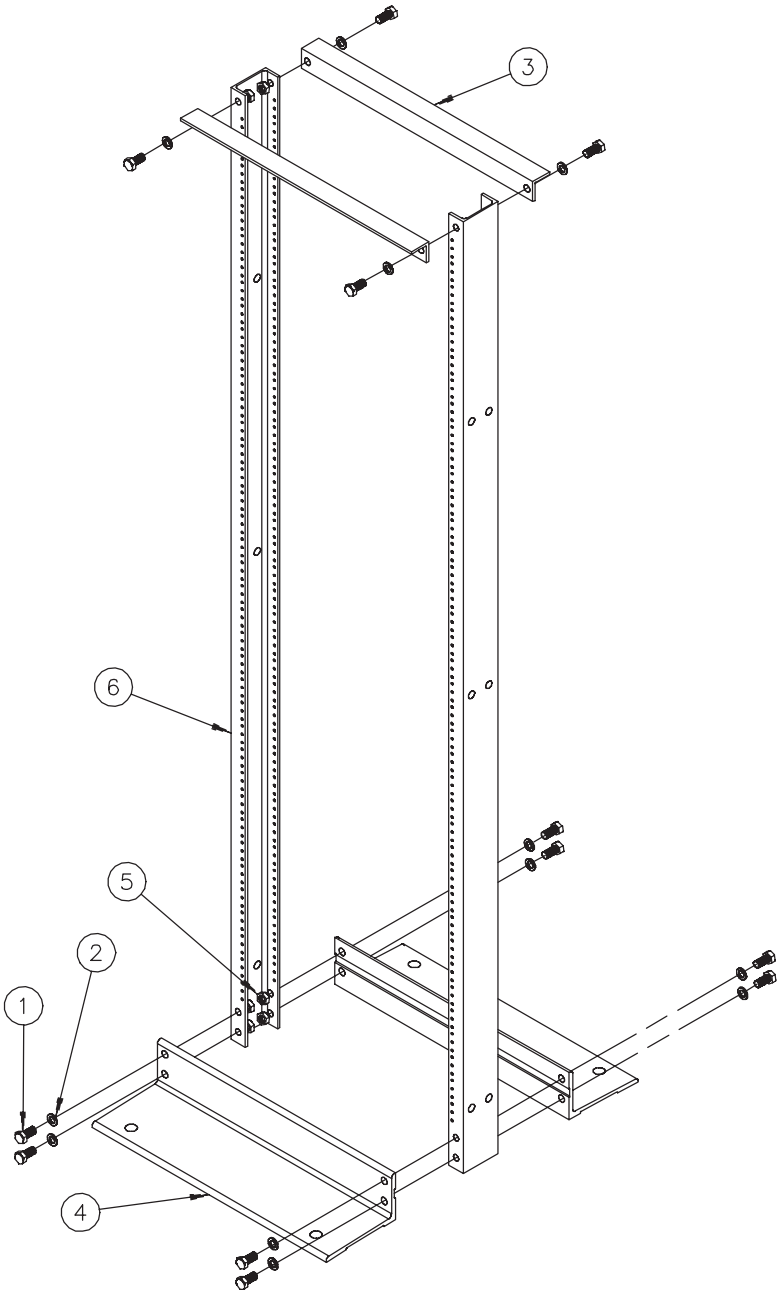

© 2018 Hoffman Enclosures Inc.

© 2018 Hoffman Enclosures Inc.
PH 763 422 2211 • nVent.com/HOFFMAN
P/N 11359943 87567388