ProLine G2

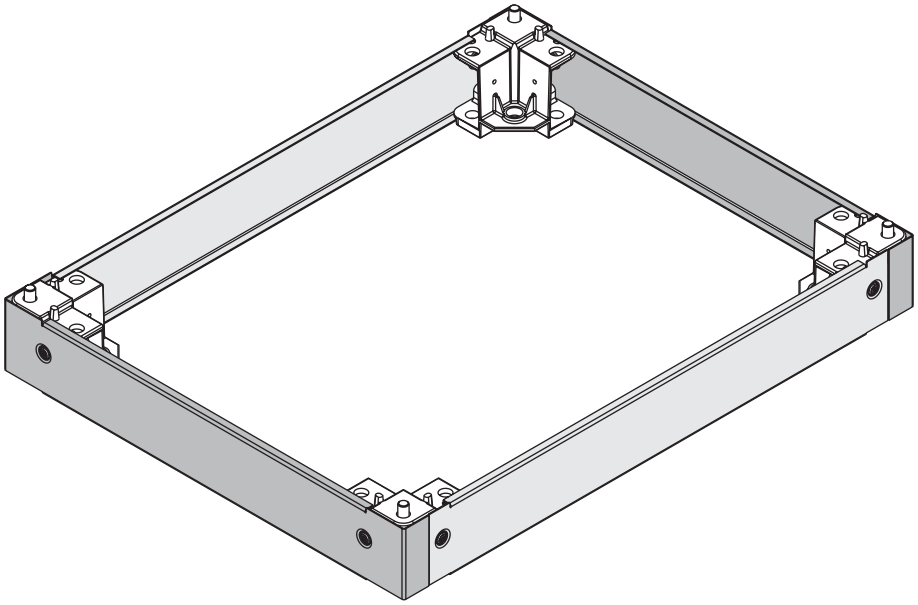

© 2018 Hoffman Enclosures Inc.
PH 763 422 2211 • nVent.com/HOFFMAN
P/N 89127514

1 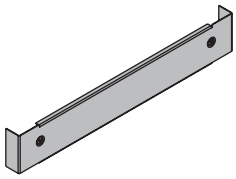 (2x)	2 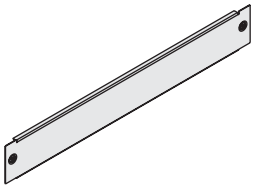 (2x)	3 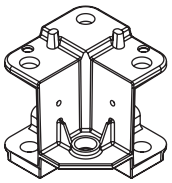 (4x)
4 M12X35 (4x)	5 M12 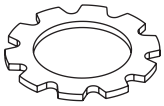 (4x)	6 M5X10 (8x)

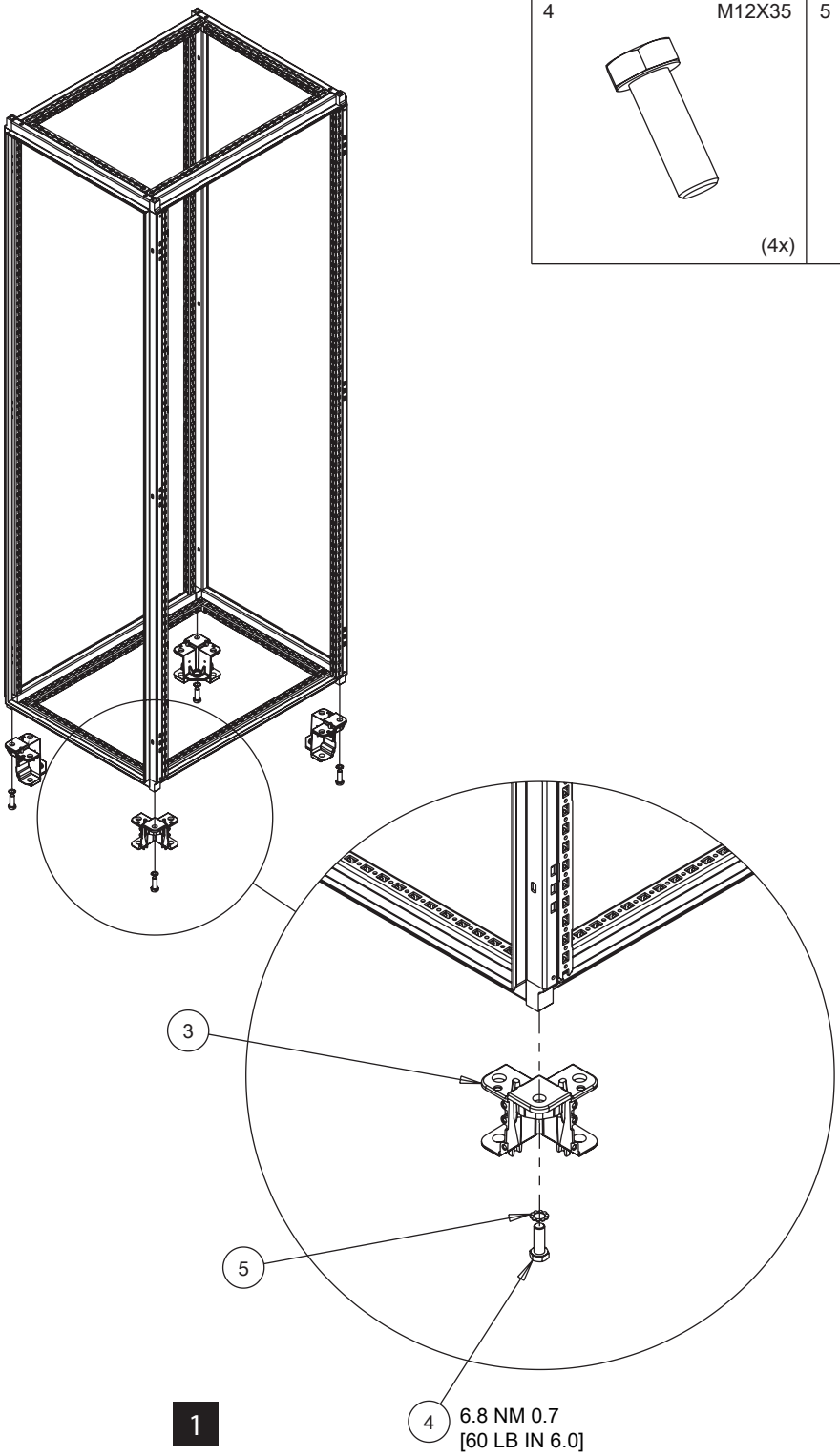

1

© 2018 Hoffman Enclosures Inc.

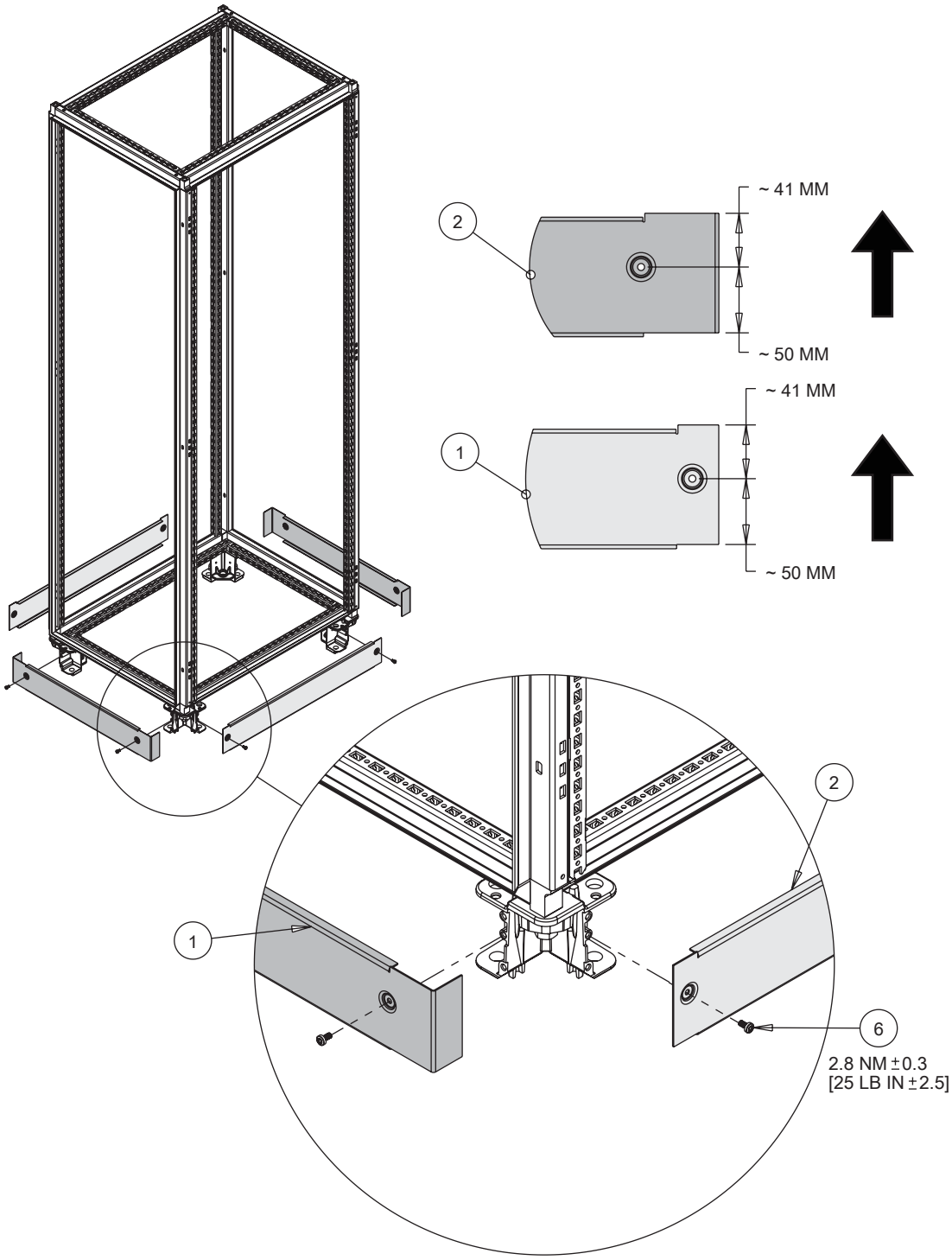

2

© 2018 Hoffman Enclosures Inc.

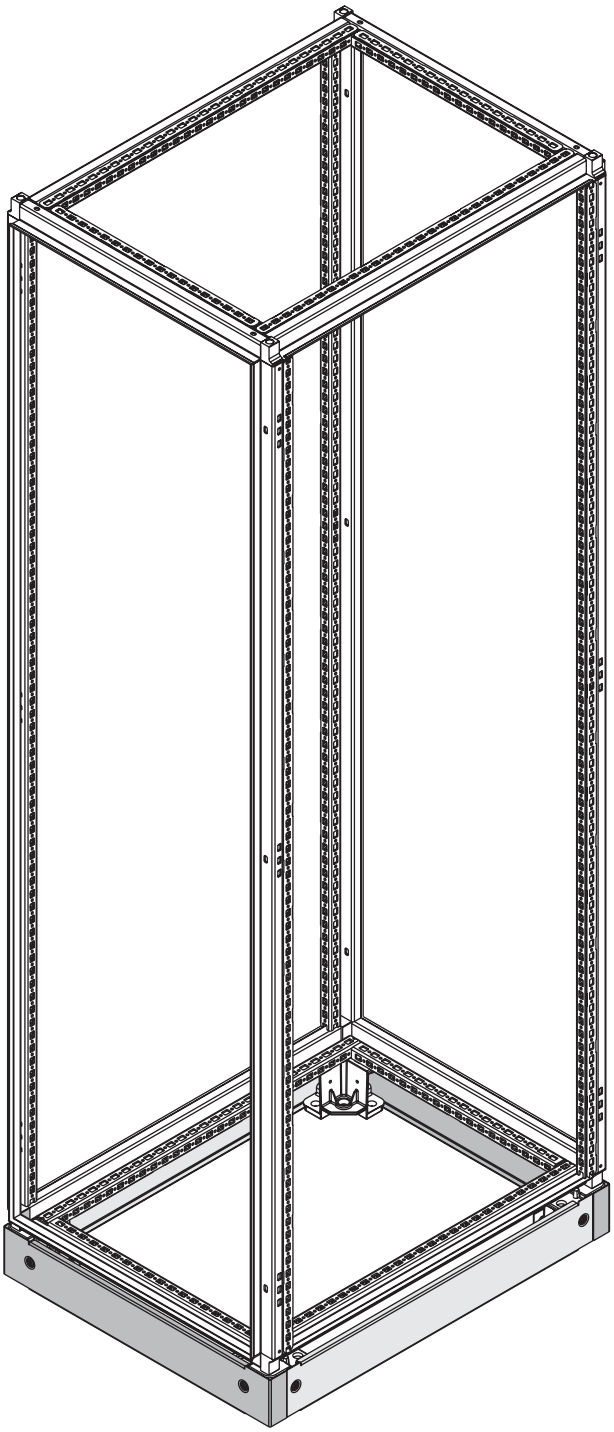

3

© 2018 Hoffman Enclosures Inc.