nVent

HOFFMAN

VERSARACK™

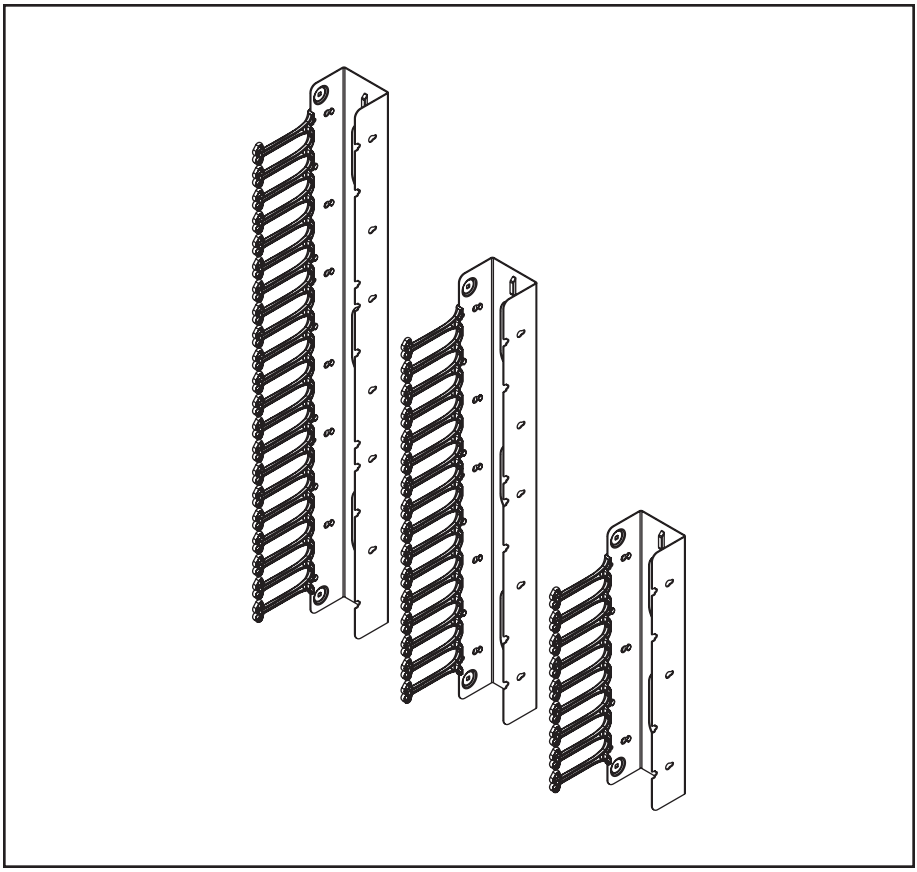

© 2018 Hoffman Enclosures Inc.
PH 763 422 2211 • nVent.com/HOFFMAN
P/N 89103113 87103312

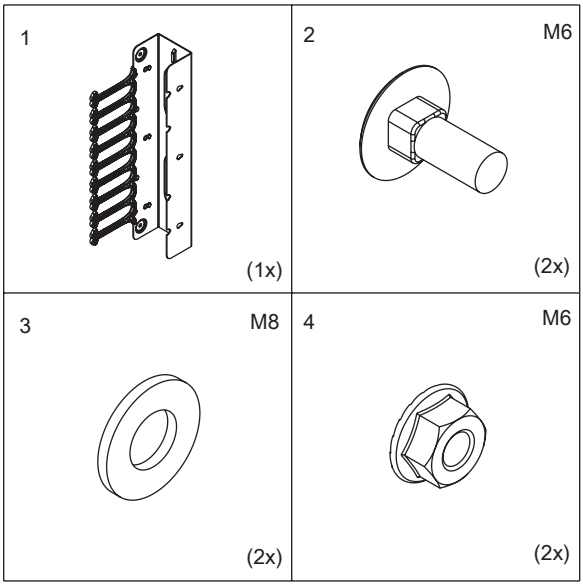

© 2018 Hoffman Enclosures Inc.

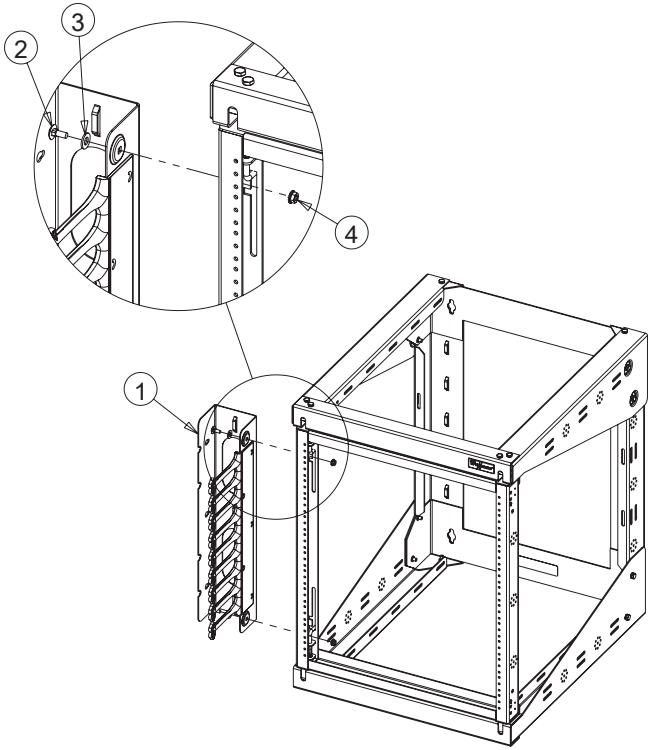
2
3
4
1

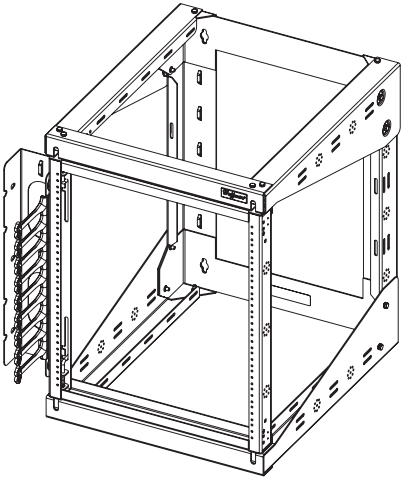

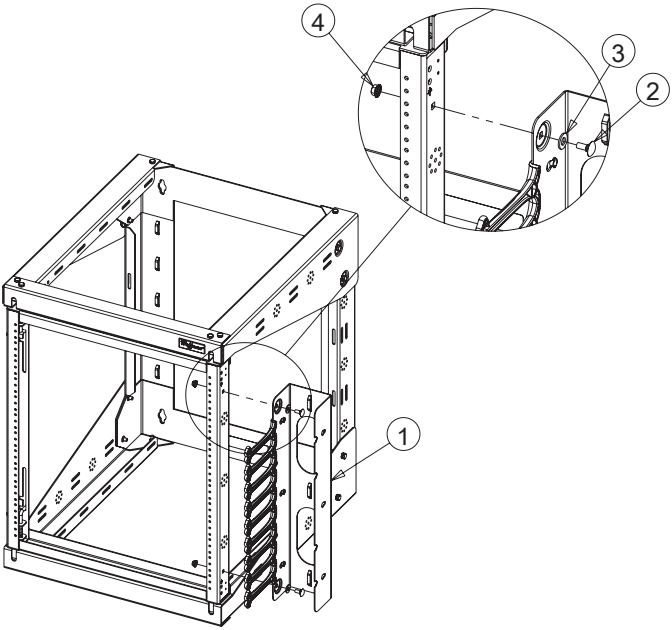

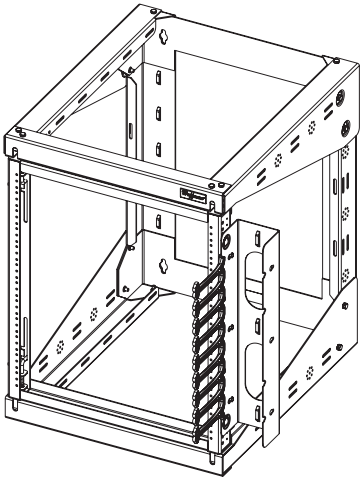

© 2018 Hoffman Enclosures Inc.