3M

Scotch-Weld™

Polyurethane Reactive (PUR) Easy Adhesive Applicator

120V. USA
100V. JAPAN
120V. USA REFURB

User's Manual

Use only with 3M™ Scotch-Weld™ Polyurethane Reactive (PUR) Easy Adhesives

Please read all instructions before using.

Table of Contents

Important Safety Instructions 1

3M™ Scotch-Weld™ Polyurethane Reactive (PUR) Easy Adhesive 1

Scotch-Weld PUR Easy Adhesive Applicator Operation 1

Scotch-Weld PUR Easy Adhesive Applicator Servicing 2

Grounding Instructions 3

Setup and Installation 4-5

Loading Applicator and Dispensing with New Cartridge 6-8

Reloading Applicator 9-15

Cold Cartridge Reload 9-13

Preheated Cartridge Reload 13-15

Applicator Shutdown 15

Nozzle Removal and Replacement 16

Applicator Diagram and Replacement Parts List 17

Parts and Accessories 18-19

Operator Productivity and Comfort 20

Troubleshooting 21-36

Condition 1: No or Low Adhesive Flow/Audible Air Leak 22-26

Condition 2: No or Low Adhesive Flow/No Audible Air Leak 27-30

Condition 3: Nozzle Drip 31

Condition 4: Slow Adhesive Shut Off 31

Condition 5: Applicator Will Not Heat: 31-36

Applicator Reassembly Procedure 37

Warranty/Important Notice/Limitation of Remedies/Limitation of Liability 38

Important Safety Instructions

SAVE THESE INSTRUCTIONS

Read all instructions before using this product.

3M™ Scotch-Weld™ Polyurethane Reactive (PUR) Easy Adhesive

For health and safety information, see product label and Material Safety Data Sheet for Scotch-Weld PUR Easy Adhesive before using.

⚠WARNING

Use only with 3M™ Scotch-Weld™ Polyurethane Reactive (PUR) Easy Adhesive Cartridges. Use with any other materials **may cause hazardous conditions.**

⚠WARNING

3M™ Scotch-Weld™ Polyurethane Reactive (PUR) Easy Adhesive Cartridges should be preheated or used in 3M Scotch-Weld PUR Easy Adhesive Preheater or 3M Scotch-Weld PUR Easy Adhesive Applicator only. Do not preheat 3M Scotch-Weld PUR Easy Adhesive Cartridges in ovens or other heating devices or use in other applicators. **May cause hazardous conditions.**

⚠WARNING

Do not heat or expose 3M™ Scotch-Weld™ Polyurethane Reactive (PUR) Easy Adhesive to temperatures or surfaces above 275°F (135°C). **Vapors of heated material may be irritating to eyes and respiratory tract and may cause asthma-like symptoms in persons previously sensitized to isocyanates.**

⚠WARNING

Do not clean or remove 3M™ Scotch-Weld™ Polyurethane Reactive (PUR) Easy Adhesive with heat, flame, or solvent. **May cause hazardous vapor or fire.**

Important: For additional health and safety information, see product label and Material Safety Data Sheet for Scotch-Weld Adhesive used.

⚠WARNING

Avoid Contact with Flammable materials

3M™ Scotch-Weld™ Polyurethane Reactive (PUR) Easy Adhesive Applicator Operation

⚠WARNING

To reduce the risk of electrical shock or injury while operating or servicing the 3M™ Scotch-Weld™ Polyurethane Reactive (PUR) Easy Adhesive Applicator, observe the following safety rules:

1. Operate and service the applicator only as described in this manual.
2. Connect the applicator only to a properly grounded outlet.
3. Do not unplug the applicator by pulling on the cord. Grasp the plug, not the cord, to unplug.
4. Do not handle the plug or applicator with wet hands.
5. Do not use the applicator outdoors or on wet surfaces.
6. Do not use the applicator with damaged cord or plug.
7. Do not use the applicator if it is not working properly or has been dropped, damaged, submerged in water, or left outdoors.

⚠WARNING

Use only 3-prong grounded plug and properly grounded outlet. Failure to use properly grounded plug and outlet **may cause electrical shock.**

Important: If you are not sure of proper connections, get help from a qualified electrician or service person.

⚠WARNING

Do not use an unapproved extension cord with the applicator. Use an extension cord which complies with NEC requirements and state and local codes and other requirements.

Important: Use only a properly rated 3-prong grounded extension cord which complies to NEC requirements state and local codes.Use of an improper extension cord **may cause electrical shock.**

Continued on next page

Important Safety Instructions (continued)

Important

FOR INDUSTRIAL USE ONLY

This 3M™ Scotch-Weld™ Polyurethane Reactive (PUR) Easy Adhesive Applicator is designed exclusively for use with 3M™ Scotch-Weld™ Polyurethane Reactive (PUR) Easy Adhesives. The use of this applicator with other adhesives or use of this applicator other than for its intended use may result in unsafe or hazardous conditions.

⚠ Caution

Avoid contact with hot adhesive, cartridge, applicator tip, and metal components. **May cause burns.**

Important: Wear heat resistant gloves and safety glasses when using.

⚠ Caution

Do not connect the applicator to air supply with greater than 80 psi air pressure. **May cause hazardous conditions or damage the applicator.**

Important: For disposal of adhesive or adhesive components, please read and follow information found on the selected 3M™ Scotch-weld™ Polyurethane Reactive (PUR) Easy Adhesive MSDS.

3M™ Scotch-Weld™ Polyurethane Reactive (PUR) Easy Adhesive Applicator Servicing

⚠ WARNING

Disconnect air and electrical power and make sure applicator has cooled to room temperature before servicing. Failure to disconnect air and electrical power or failure to allow applicator to cool before servicing **may cause electrical shock or burns.** Read User's Manual before servicing.

⚠ WARNING

Use only 3M-specified replacement parts. Use of other replacement parts **may cause hazardous conditions or damage the applicator.**

⚠ WARNING

Do not modify the plug provided with the applicator or use with an adapter or ungrounded outlet. Improper grounding connection of the applicator **may cause electric shock.**

Important: If the plug will not fit the outlet, have a qualified electrician or service person install the proper outlet.

Grounding Instructions

⚠WARNING

Do not modify the plug provided with the applicator or use with an adapter or ungrounded outlet. Improper grounding connection of the applicator **may cause electric shock.**

Important: If the plug will not fit the outlet, have a qualified electrician or service person install the proper outlet.

The 3M™ Scotch-Weld™ Polyurethane Reactive (PUR) Easy Adhesive Applicator must be grounded. If the applicator malfunctions or breaks down, grounding provides a path of least resistance for electric current to help reduce the risk of electric shock.

This applicator is equipped with a cord having an equipment-grounding conductor and grounding plug. The plug must be used with an appropriate outlet that is properly installed and grounded in accordance with all state and local codes and requirements.

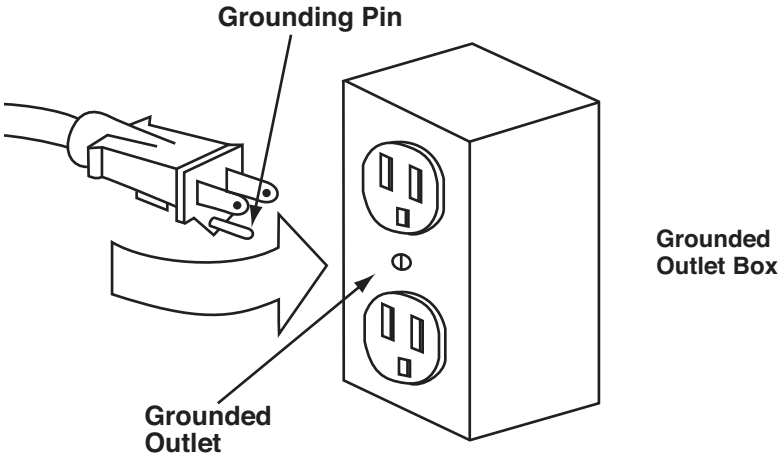

The Scotch-Weld PUR Easy Adhesive Applicator is intended for use on a nominal 120-volt circuit and has a grounding plug as shown in the figure above. Make sure the applicator is connected to an outlet having the same configurations as the plug. **Do not use an adapter.**

3M™ Scotch-Weld™ Polyurethane Reactive (PUR) Easy Adhesive Applicator

120VAC 50/60Hz 1.7A 200W

3M
3M Industrial Adhesives and Tapes Division
3M Center, Building 220-5E-06
St. Paul, MN 55144-1000

Setup and Installation

⚠Caution

Do not connect the applicator to air supply with greater than 80 psi air pressure. **May cause hazardous conditions or damage the applicator.**

Important: For disposal of adhesive or adhesive components, please read and follow information found on the selected 3M™ Scotch-Weld™ Polyurethane Reactive (PUR) Easy Adhesive MSDS.

1. Remove the applicator from its shipping container and inspect for any obvious damage. If damaged, do not use and immediately contact your local 3M representative.

2. Connect air coupling provided on the end of the supply hose (male 1/8-inch pipe thread) to a filtered, regulated and **dry** air supply. (Regulator and filter not included.)

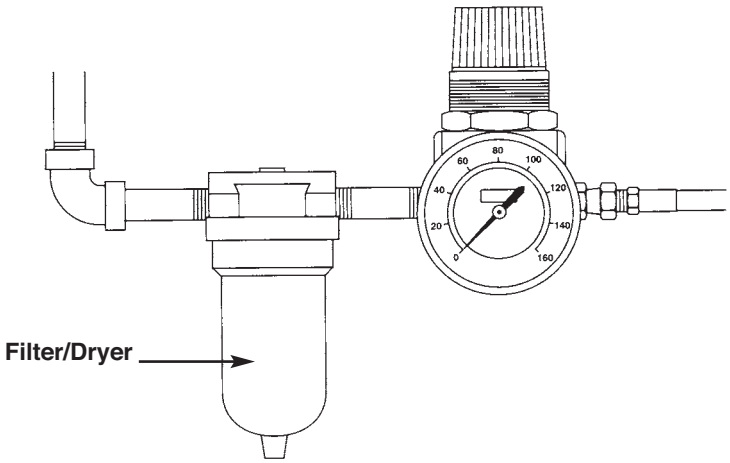

⚠WARNING

Use only 3-prong grounded plug and properly grounded outlet. Failure to use properly grounded plug and outlet **may cause electrical shock.**

Important: If you are not sure of proper connections, get help from a qualified electrician or service person.

3. Adjust air regulator to a 80 psi starting point.

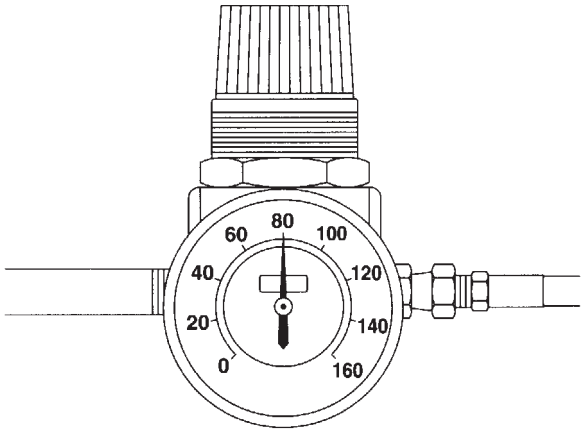

⚠WARNING

Do not use an unapproved extension cord with the applicator. Use an extension cord which complies with NEC requirements and state and local codes and other requirements.

4. Plug applicator into grounded 120 VAC receptacle.

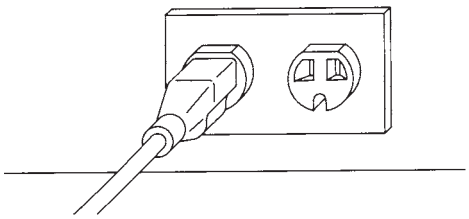

5. Push the on/off switch to the “on” position, indicated by visible red portion of the switch.

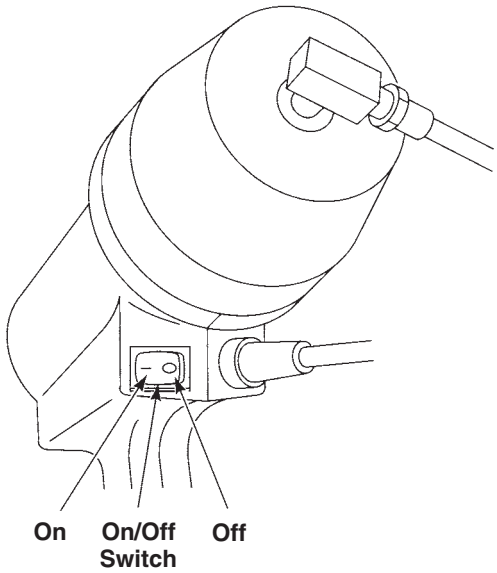

⚠ Caution

Avoid contact with hot adhesive, cartridge, applicator tip, and metal components. **May cause burns.**

Important: Wear heat resistant gloves and safety glasses when using.

⚠ WARNING

Use only 3M™ Scotch-Weld™ Polyurethane Reactive (PUR) Easy Adhesive Cartridges. Use with any other material **may cause hazardous conditions.**

⚠ WARNING

3M™ Scotch-Weld™ Polyurethane Reactive (PUR) Easy Adhesive Cartridges should be preheated or used in 3M Scotch-Weld PUR Easy Adhesive Preheater or 3M Scotch-Weld PUR Easy Adhesive Applicator only. Do not preheat 3M Scotch-Weld PUR Easy Adhesive Cartridges in ovens or other heating devices or use in other applicators. **May cause hazardous conditions.**

6. Let applicator heat for five (5) minutes prior to loading adhesive cartridge.

7. Remove end cap from applicator by unscrewing end cap counterclockwise.

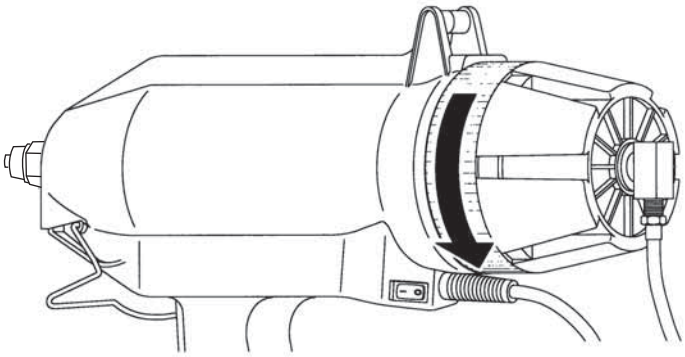

Loading Applicator and Dispensing with New Adhesive Cartridge

⚠Caution

Avoid contact with hot adhesive, cartridge, applicator tip, and metal components. **May cause burns.**

Important: Wear heat resistant gloves and safety glasses when using.

1. Select adhesive cartridge and place it on a bench or flat work surface with the threaded nozzle pointing upward.

2. Place a punch or similar tool into the nozzle portion of the cartridge as shown.

3. Tap the punch handle using a hammer, mallet or similar instrument until the front aluminum seal of the cartridge has been pierced.

4. Select and install a disposable nozzle provided with the 3M™ Scotch-Weld™ Polyurethane Reactive (PUR) Easy Adhesive onto the cartridge by turning the nozzle clockwise unitl the nozzle base is tight or flush with the cartridge.

⚠WARNING

Use only 3M™ Scotch-Weld™ Polyurethane Reactive (PUR) Easy Adhesive Cartridges. Use with any other material **may cause hazardous conditions.**

5. Insert adhesive cartridge, complete with disposable nozzle into the applicator as shown.

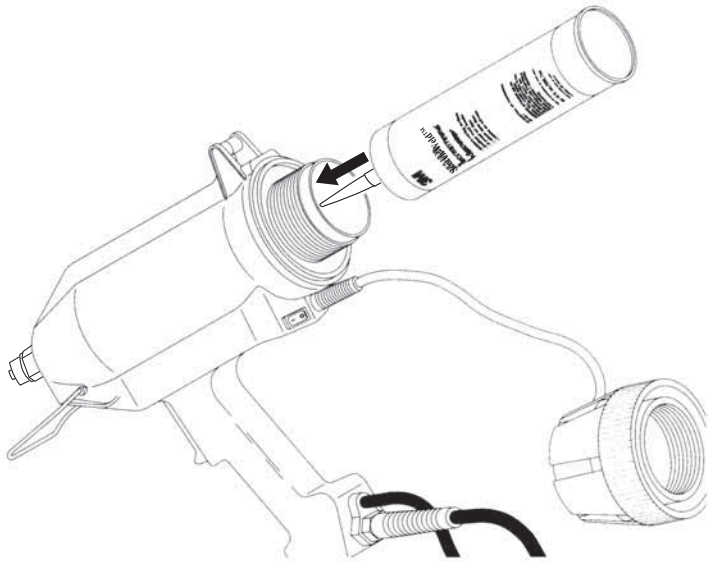

6. Adjust the Shroud: With a Scotch-Weld PUR Easy adhesive cartridge and Disposable Nozzle loaded in the applicator, insert Nozzle Shroud (A) into Nozzle Warmer (B) allowing Approximately 1/16" of the Disposable Nozzle protruding as shown and tighten set- screw (C) to secure

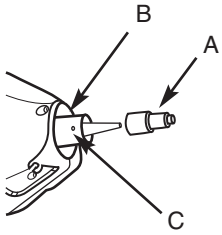

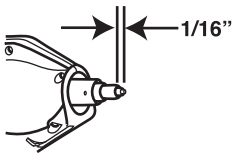

⚠WARNING

Use only 3M™ Scotch-Weld™ Polyurethane Reactive (PUR) Easy Adhesive Cartridges. Use with any other material **may cause hazardous conditions.**

⚠WARNING

3M™ Scotch-Weld™ Polyurethane Reactive (PUR) Easy Adhesive Cartridges should be preheated or used in 3M Scotch-Weld PUR Easy Adhesive Preheater or 3M Scotch-Weld PUR Easy Adhesive Applicator only. Do not preheat 3M Scotch-Weld PUR Easy Adhesive Cartridges in ovens or other heating devices or use in other applicators. **May cause hazardous conditions.**

7. Tighten applicator end cap to ensure a positive seal. Allow cartridge to warm for a minimum of 35 minutes.

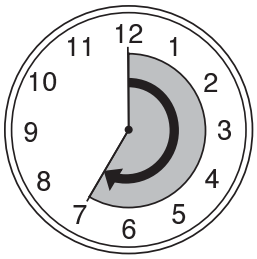

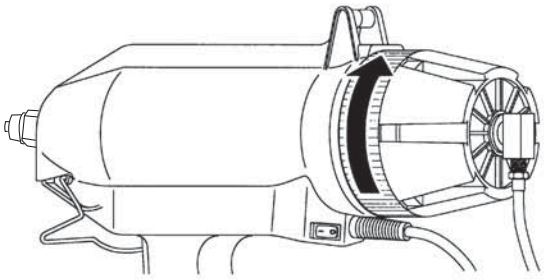

Loading Applicator and Dispensing with New Adhesive Cartridge (continued)

⚠ WARNING

Do not heat or expose 3M™ Scotch-Weld™ Polyurethane Reactive (PUR) Easy Adhesive to temperatures or surfaces above 275°F (135°C). **Vapors of heated material may be irritating to eyes and respiratory tract and may cause asthma-like symptoms in persons previously sensitized to isocyanates.**

⚠ Caution

Do not connect the applicator to air supply with greater than 80 psi air pressure. **May cause hazardous conditions or damage the applicator.**

Important: For disposal of adhesive or adhesive components, please read and follow information found on the selected 3M™ Scotch-Weld™ Polyurethane Reactive (PUR) Easy Adhesive MSDS.

⚠ WARNING

Do not clean or remove 3M™ Scotch-Weld™ Polyurethane Reactive (PUR) Easy Adhesive with heat, flame, or solvent. **May cause hazardous vapor or fire.** For additional health and safety information, see product label and Material Safety Data Sheet for Scotch-Weld Adhesive used.

Important: For additional health and safety information, see product label and Material Safety Data Sheet for Scotch-Weld Adhesive used.

Dispensing

1. After the adhesive cartridge has completely warmed for a minimum of 35 minutes, (in the Easy Preheater or applicator) actuate trigger on applicator for adhesive application. (For best results, set air pressure at 80 psi to **start** adhesive flow.)

2. Adjust for desired adhesive flow rate by setting air regulator between 30 psi and 80 psi.

Note

For best results, hang the applicator from a tool balancer or stand up by means of the wire stand.

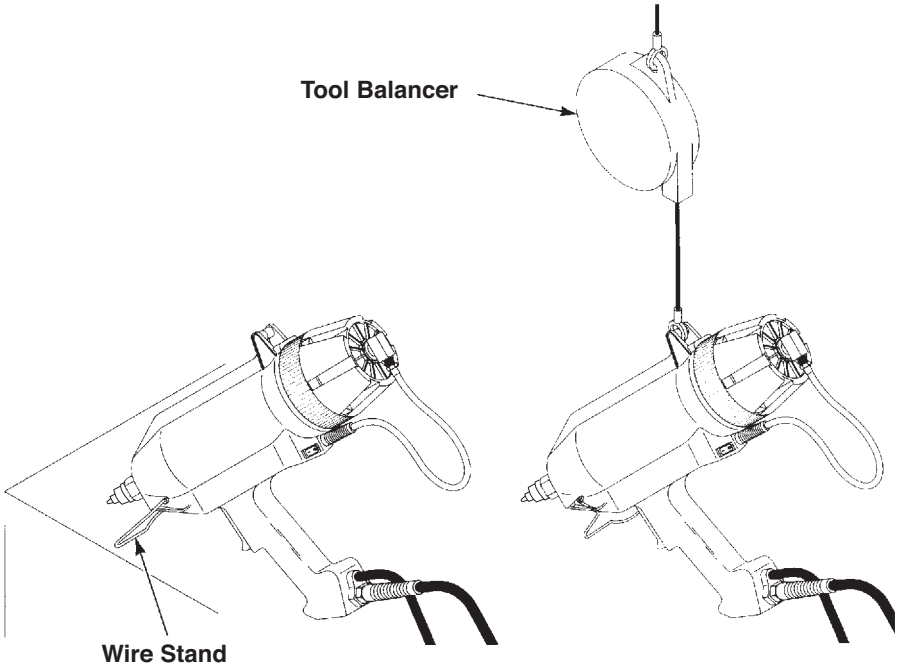

Reloading Applicator

Cold Cartridge Reload

⚠Caution

Avoid contact with hot adhesive, cartridge, applicator tip, and metal components. **May cause burns.**

Important: Wear heat resistant gloves and safety glasses when using.

⚠WARNING

Use only 3M™ Scotch-Weld™ Polyurethane Reactive (PUR) Easy Adhesive Cartridges. Use with any other material **may cause hazardous conditions.**

Important

Adhesive will resist flowing through applicator if total heat history of adhesive cartridge at application temperature exceeds 40 hours (total time in preheater and in applicator). Properly discard any adhesive cartridge that has been heated longer than 40 hours and replace with a new, heated cartridge.

1. If applicator is cold, turn it on and allow to heat for five (5) minutes.
2. Unscrew and remove end cap from applicator.

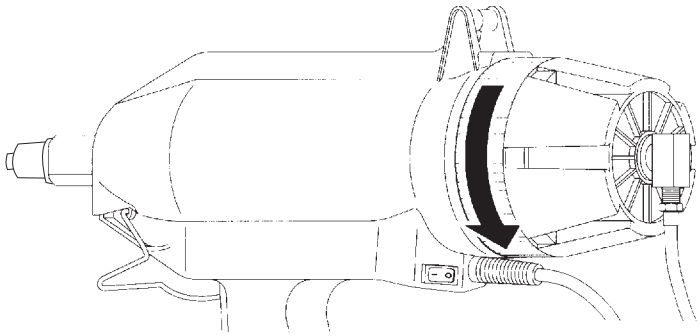

3. Remove empty cartridge with attached nozzle assembly from applicator and discard.

Reloading Applicator (continued)

Cold Cartridge Reload

⚠WARNING

3M™ Scotch-Weld™ Polyurethane Reactive (PUR) Easy Adhesive Cartridges should be preheated or used in 3M Scotch-Weld PUR Easy Adhesive Preheater or 3M Scotch-Weld PUR Easy Adhesive Applicator only. Do not preheat 3M Scotch-Weld PUR Easy Adhesive Cartridges in ovens or other heating devices or use in other applicators. **May cause hazardous conditions.**

⚠WARNING

Use only 3M™ Scotch-Weld™ Polyurethane Reactive (PUR) Easy Adhesive Cartridges. Use with any other material **may cause hazardous conditions.**

⚠Caution

Avoid contact with hot adhesive, cartridge, applicator tip, and metal components. **May cause burns.**

Important: Wear heat resistant gloves and safety glasses when using.

4. Select adhesive cartridge and place it on a bench or flat work surface with the threaded nozzle pointing upward.

5. Place a punch or similar tool into the nozzle portions of the cartridges as shown.

6. Tap the punch handle using a hammer, mallet or similar instrument until the front aluminum seal of the cartridge has been pierced.

Cold Cartridge Reload

7. Select and install a nozzle provided with the 3M™ Scotch-Weld™ Polyurethane Reactive (PUR) Easy Adhesive onto the cartridge by turning the nozzle clockwise until the nozzle base is tight or flush with the cartridge.

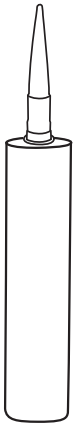

⚠ Caution

Avoid contact with hot adhesive, cartridge, applicator tip, and metal components. **May cause burns.**

Important: Wear heat resistant gloves and safety glasses when using.

8. Insert adhesive cartridge complete with nozzle into the applicator as shown.

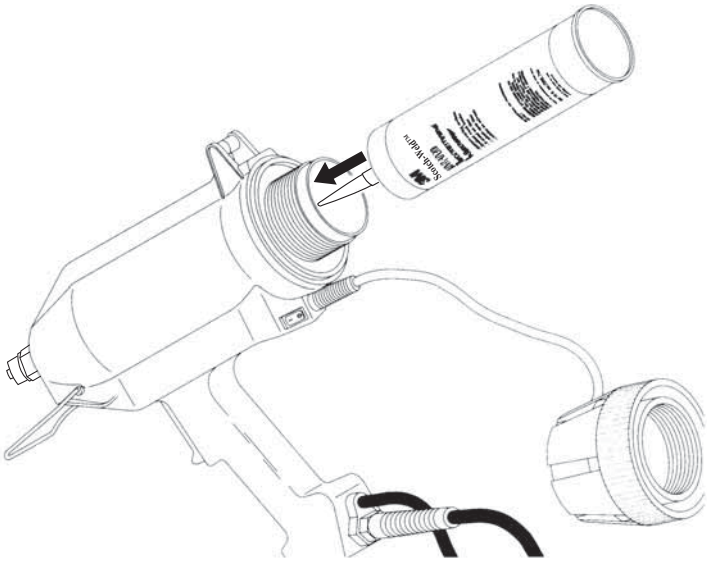

⚠ WARNING

Use only 3M™ Scotch-Weld™ Polyurethane Reactive (PUR) Easy Adhesive Cartridges. Use with any other material **may cause hazardous conditions.**

9. Tighten applicator end cap to ensure a positve seal. Allow cartridge to warm for a minimum of 35 minutes before dispensing.

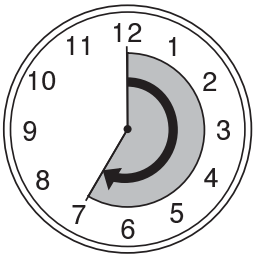

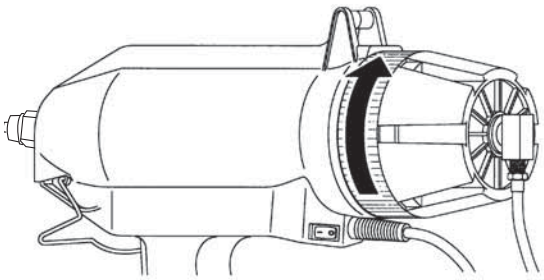

Reloading Applicator (continued)

⚠WARNING

Do not heat or expose 3M™ Scotch-Weld™ Polyurethane Reactive (PUR) Easy Adhesive to temperatures or surfaces above 275°F (135°C). **Vapors of heated material may be irritating to eyes and respiratory tract and may cause asthma-like symptoms in persons previously sensitized to isocyanates.**

⚠WARNING

3M™ Scotch-Weld™ Polyurethane Reactive (PUR) Easy Adhesive Cartridges should be preheated or used in 3M Scotch-Weld PUR Easy Adhesive Preheater or 3M Scotch-Weld PUR Easy Adhesive Applicator only. Do not preheat 3M Scotch-Weld PUR Easy Adhesive Cartridges in ovens or other heating devices or use in other applicators. **May cause hazardous conditions.**

⚠WARNING

Do not clean or remove 3M™ Scotch-Weld™ Polyurethane Reactive (PUR) Easy Adhesive with heat, flame, or solvent. **May cause hazardous vapor or fire.**

Important: For additional health and safety information see product lable and Material Safety Data Sheet for Scotch-Weld Adhesive used.

⚠Caution

Do not connect the applicator to air supply with greater than 80 psi air pressure. **May cause hazardous conditions or damage the applicator.**

Important: For disposal of adhesive or adhesive components, please read and follow information found on the selected 3M™ Scotch-Weld™ Polyurethane Reactive (PUR) Easy Adhesive MSDS.

Dispensing

1. After the adhesive cartridge has completely warmed for a minimum of 35 minutes, actuate trigger on applicator for adhesive application. (For best results, set air pressure at 80 psi to **start** adhesive flow.)

2. Adjust for desired adhesive flow rate by setting air regulator between 30 psi and 80 psi.

⚠Caution

Avoid contact with hot adhesive, cartridge, applicator tip, and metal components. **May cause burns.**

Important: Wear heat resistant gloves and safety glasses when using.

Loading and dispensing with partially used adhesive cartridge:

If applicator has been shut down with a partially used cartridge of adhesive, use the following steps to restart adhesive flow:

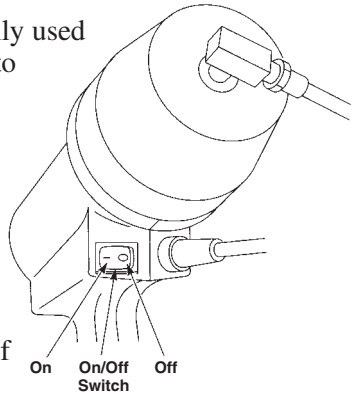

1. Make sure applicator is plugged into electrical outlet and air is connected per instructions in "Setup and Installation" section of manual.

2. Push the on/off switch to the "ON" position, indicated by visible red portion of the switch.

3. Let the applicator heat for approximately 10 minutes.

4. Remove end cap from applicator by unscrewing end cap counterclockwise and removing adhesive cartridge and nozzle.

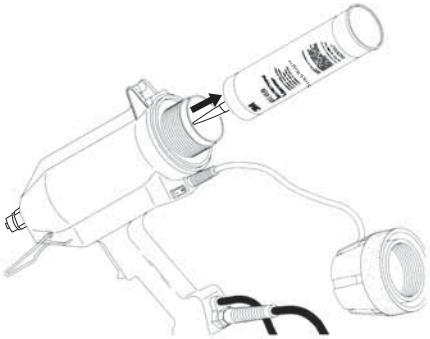

5. While holding the adhesive cartridge with heat resistant gloves, turn nozzle tip counterclockwise to remove, and discard nozzle with cured adhesive.

6. Select and install a fresh nozzle and thread it clockwise until the base of the nozzle is tight and or flush with the cartridge.

7. Insert adhesive cartridge complete with nozzle in the applicator as shown.

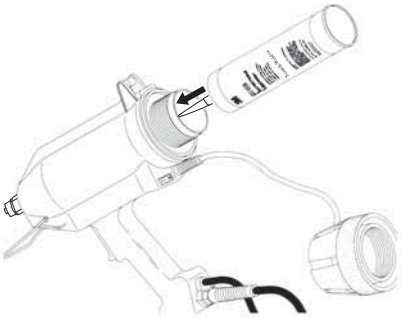

8. Tighten applicator end cap clockwise to ensure a positive seal. Allow cartridge to warm for a minimum of 35 minutes. Follow "Dispensing" procedure for trouble free operation.

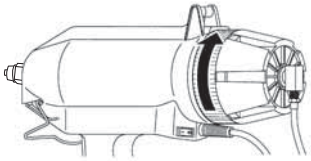

Reloading Applicator (continued)

Preheated Cartridge Reload

⚠Caution

Avoid contact with hot adhesive, cartridge, and metal components. **May cause burns.**

Important: Wear heat resistant gloves and safety glasses when using.

WARNING

3M™ Scotch-Weld™ Polyurethane Reactive (PUR) Easy Adhesive Cartridges should be preheated or used in 3M Scotch-Weld PUR Easy Adhesive Preheater or 3M Scotch-Weld PUR Easy Adhesive Applicator only. Do not preheat 3M Scotch-Weld PUR Easy Adhesive Cartridges in ovens or other heating devices or use in other applicators. **May cause hazardous conditions.**

Important
Adhesive will resist flowing through applicator if total heat history of adhesive cartridge at application temperature exceeds 40 hours (total time in preheater and in applicator). Properly discard any adhesive cartridge that has been heated longer than 40 hours and replace with a new, heated cartridge.

1. If applicator is cold, turn it on and allow to heat for five (5) minutes.
2. Unscrew and remove end cap from applicator.

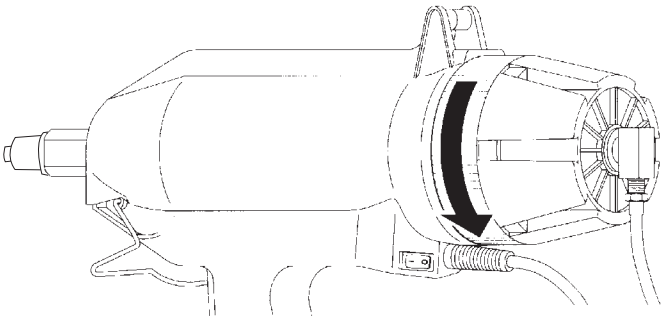

3. Remove empty cartridge with attached nozzle assembly from applicator and discard.
4. Remove heated 3M™ Scotch-Weld™ Polyurethane Reactive (PUR) Easy Adhesive Cartridge complete with attached nozzle from 3M™ Scotch-Weld™ Polyurethane Reactive (PUR) Easy Preheater. (Follow "Cartridge Heating Procedure" found in the 3M™ Scotch-Weld™ Polyurethane Reactive (PUR) Easy Preheater User's Manual.)
5. Before loading pre-heated cartridge into applicator, retighten disposable nozzle to prevent adhesive leakage.
6. Insert adhesive cartridge complete with disposable nozzle into the applicator as shown.

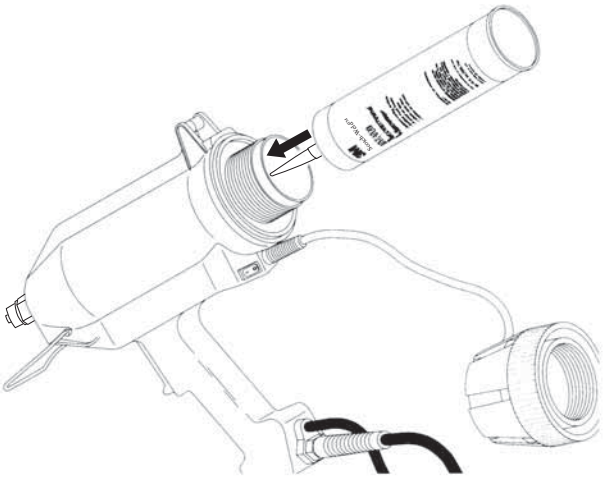

Preheated Cartridge Reload

⚠Caution

Avoid contact with hot adhesive, cartridge, and metal components. **May cause burns.**

Important: Wear heat resistant gloves and safety glasses when using.

7. Tighten applicator end cap by turning clockwise as shown.

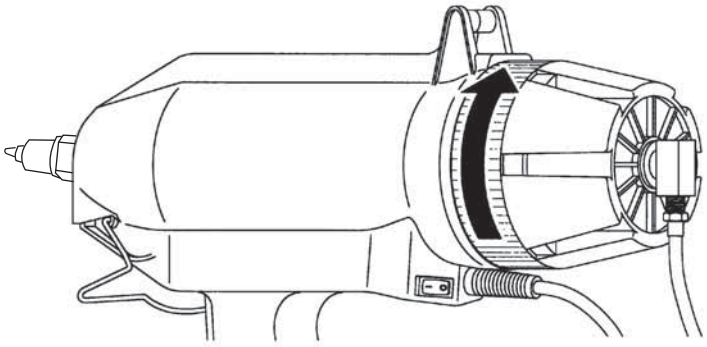

8. Dispense adhesive by following the procedure found in the "Dispensing" portion of the User's Manual found on page 8.

Applicator Shutdown

⚠Caution

Avoid contact with hot adhesive, cartridge, and metal components. **May cause burns.**

Important: Wear heat resistant gloves and safety glasses when using.

Important

Do not remove cartridge from applicator! Cartridge must remain sealed during applicator shutdown. Failure to do so will allow moisture to cure the adhesive in the cartridge and render it unusable.

1. Push on/off switch to "off" position. The red portion of the switch will no longer be visible.

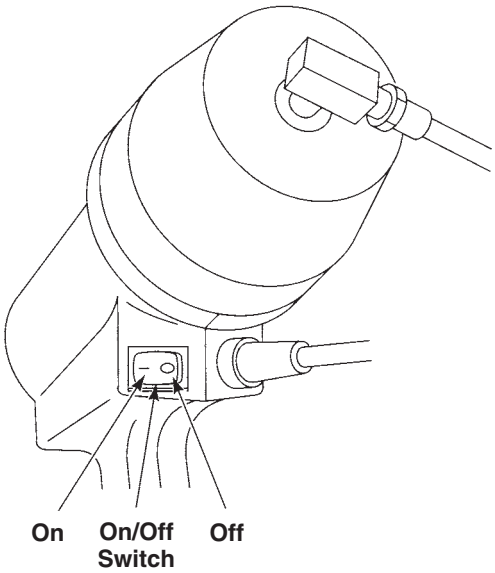

Nozzle Removal/Replacement

⚠WARNING

Use only 3M™ Scotch-Weld™ Polyurethane Reactive (PUR) Easy Adhesive Cartridges. Use with any other material **may cause hazardous conditions.**

⚠WARNING

3M™ Scotch-Weld™ Polyurethane Reactive (PUR) Easy Adhesive Cartridges should be preheated or used in 3M Scotch-Weld PUR Easy Adhesive Preheater or 3M Scotch-Weld PUR Easy Adhesive Applicator only. Do not preheat 3M Scotch-Weld PUR Easy Adhesive Cartridges in ovens or other heating devices or use in other applicators. **May cause hazardous conditions.**

⚠WARNING

Use only 3M-specified replacement parts. Use of other replacement parts **may cause hazardous conditions or damage the applicator.**

⚠Caution

Avoid contact with hot adhesive, cartridge, applicator tip, and metal components. **May cause burns.**

Important: Wear heat resistant gloves and safety glasses when using.

To remove old Nozzle Warmer:

1. Warm applicator for five to ten minutes.
2. Turn off switch and disconnect plug
3. Remove adhesive cartridge.
4. Loosen set-screw (A) and remove Nozzle Shroud (B) Note: Save Nozzle Shroud to reinstall or replace with a new one (62-9845-0029-8).

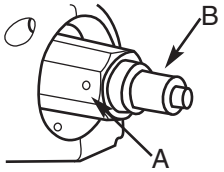

To remove old Nozzle Warmer:

5. Using a 13/16 or adjustable wrench rotate nozzle warmer until Pin (C) is aligned with slot (D).

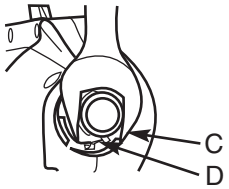

6. Push Nozzle warmer into adhesive cartridge chamber and remove from rear of applicator.

To install new Nozzle Warmer:

7. Insert Nozzle into rear of applicator.
8. Align pin with slot in the aluminum casting

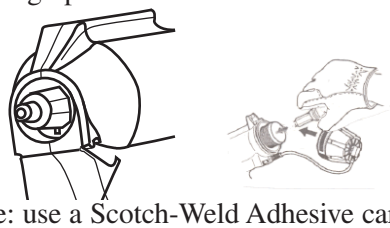

Note: use a Scotch-Weld Adhesive cartridge with disposable nozzle to help locate the Nozzle warmer

To install new Nozzle Warmer:

9. Using a 13/16 or adjustable wrench rotate nozzle warmer until Pin (C) secures the Nozzle Warmer as shown

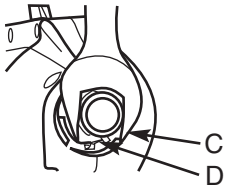

To install Nozzle Shroud:

10. With a Scotch-Weld PUR Easy adhesive cartridge and Disposable Nozzle loaded in the applicator, insert Nozzle Shroud (A) into Nozzle Warmer (E) allowing Approximately 1/16” of the Disposable Nozzle protruding as shown and tighten set screw (B) to secure

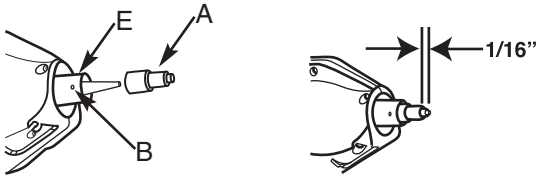

Applicator Diagram and Replacement Parts List

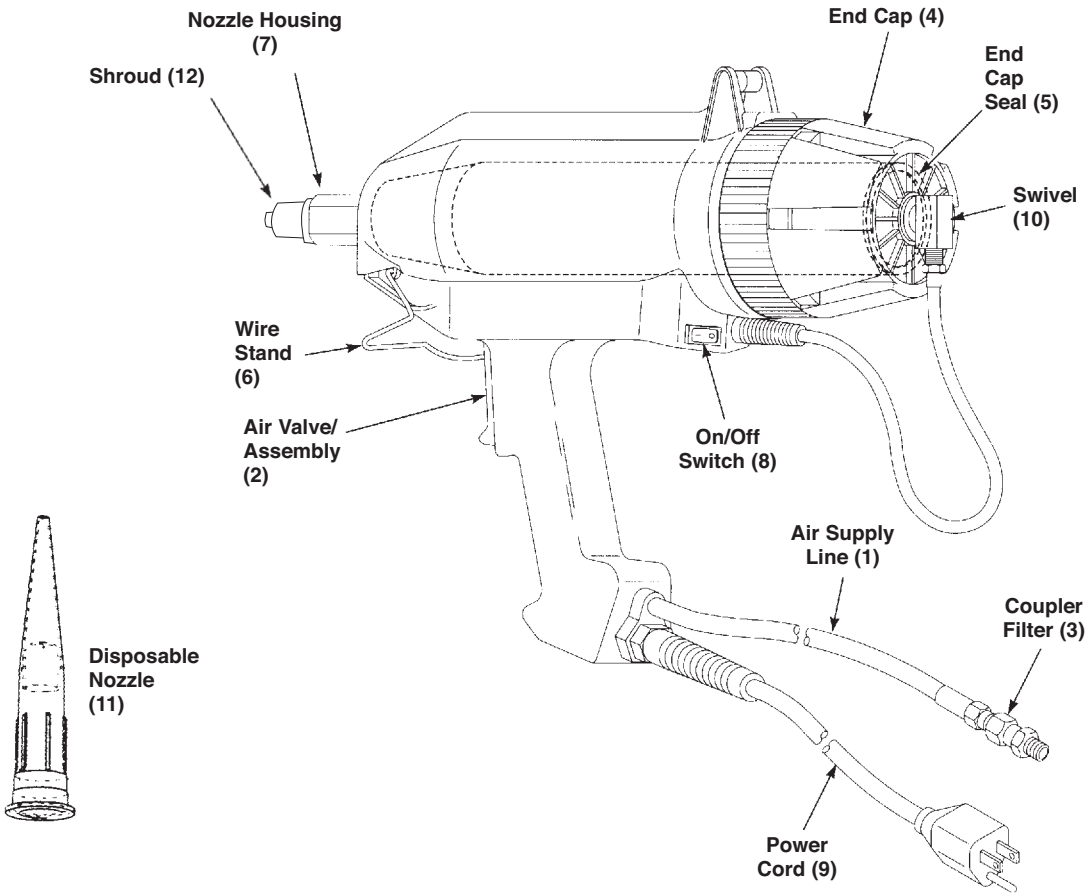

⚠ WARNING

Use only 3M-specified replacement parts. Use of other replacement parts **may cause hazardous conditions or damage the applicator.**

All 3M™ Scotch-Weld™ Polyurethane Reactive (PUR) Easy Adhesive Replacement Parts contain replacement procedure.

(1) Air Supply 62-9895-0005-3
(2) Air Valve/Kit 62-9845-0009-0
(3) Coupler Filter 62-9895-0001-2
(4) End Cap 62-9895-0003-8
(5) End Cap Seal 62-9895-0004-6
(6) Wire Stand 62-9895-0033-5
(7) Nozzle Housing 62-9845-0030-6
(8) On/Off Switch 62-9895-0024-4
(9) Power Cord 62-9895-0021-0
(10) Swivel Connector 62-9845-9934-0
(11) Disposable Nozzles 62-9845-0031-4
(12) Nozzle Shroud 62-9845-0029-8

Scotch-Weld™ Polyurethane Reactive (PUR) Easy Adhesive Applicator REPLACEMENT PARTS and ACCESSORIES

DESCRIPTION	STOCK NO.	CONTENTS
Disposable Replacement Nozzles (50/Case)	62-9845-0031-4	
Shroud 3/bag	62-9845-0029-8	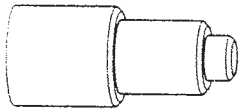
Main Nozzle Assembly	62-9845-0030-6	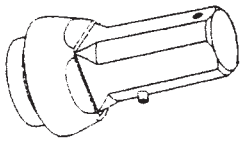
Swivel Connector	62-9845-9934-0	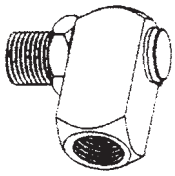
Wire Stand	62-9895-0033-5	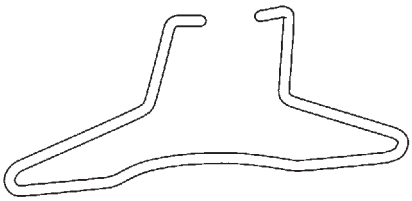
End Cap Seal	62-9895-0004-6	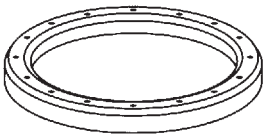
End Cap	62-9895-0003-8	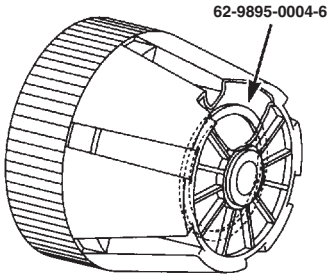
Coupler Filter	62-9895-0001-2	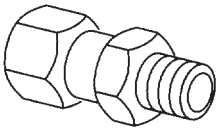

 ©3M 2005 October

DESCRIPTION	STOCK NO.	CONTENTS
Air Valve Kit	**62-9845-0009-0**	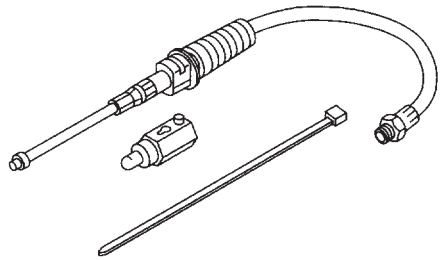
On/Off Switch Kit	**62-9895-0024-4**	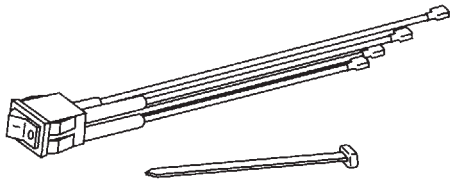
Power Cord Kit	**62-9895-0021-0**	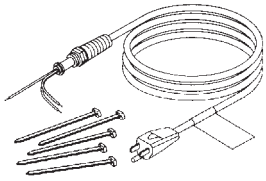
Air Supply Line Kit	**62-9895-0005-3**	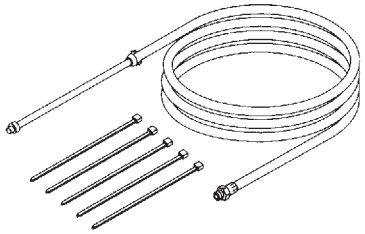

Operating Productivity and Comfort

Avoid positions that can product irritation of nerves, muscles, tendons, and cartilage of shoulder, elbow, wrist, hand, and back.

Avoid:

- Raised elbow
- Bent wrist
- Reaching
- Bending over

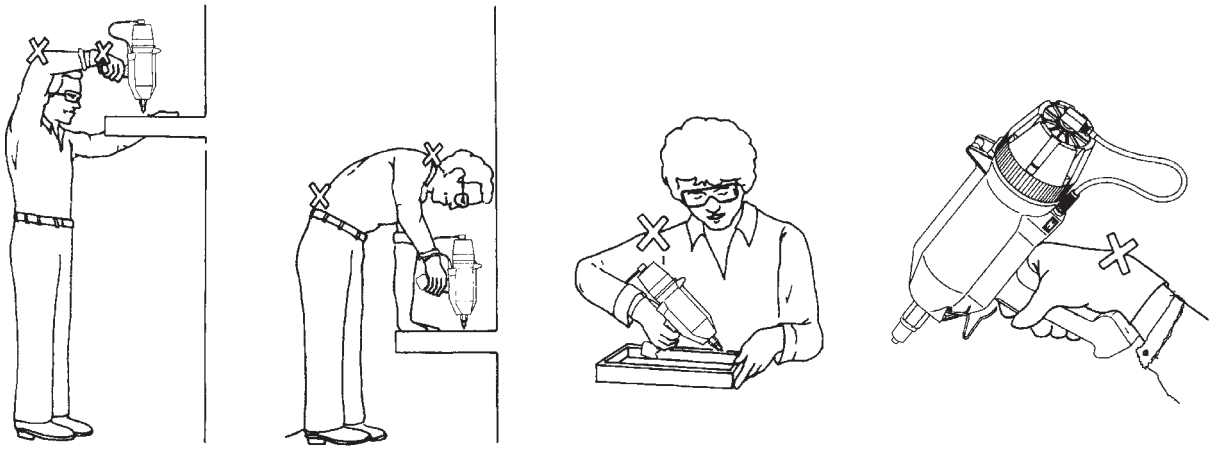

Adjust your workstation so you can:

- Stand or sit erect.
- Keep your elbows close your sides.
- Hold the applicator with a straight wrist.

Troubleshooting

⚠ WARNING

Use only 3M-specified replacement parts. Use of other replacement parts **may cause hazardous conditions or damage the applicator.**

This part of the User's Manual is divided into five sections to assist in evaluating possible problems with your 3M™ Scotch-Weld™ Polyurethane Reactive (PUR) Easy Adhesive Applicator.

If the applicator is heating refer to:

Condition 1: No or Low Adhesive Flow/Audible Air Leak Page 22

Condition 2: No or Low Adhesive Flow/No Audible Air Leak Page 27

Condition 3: Nozzle Drip Page 31

Condition 4: Slow Adhesive Shut Off Page 31

If the applicator will not heat, refer to:

Condition 5: Applicator Will Not Heat Page 31

An applicator diagram and replacement parts list can be found on page 17. Should your applicator require repair, replacement parts can be ordered from your local authorized 3M™ Scotch-Weld™ Polyurethane Reactive (PUR) Easy Adhesive distributor. If, after following these procedures, a problem still exists, contact your local 3M sales representative. For telephone numbers of the nearest 3M location refer to the back cover of this manual.

Important
Service on this applicator should only be performed by a qualified electrician or service person.

Condition 1: No or Low Adhesive Flow/Audible Air Leak

Perform the following steps until adhesive flow is achieved.

1. Tighten applicator end cap to ensure positive seal. If this does not produce adhesive flow, proceed to next step.

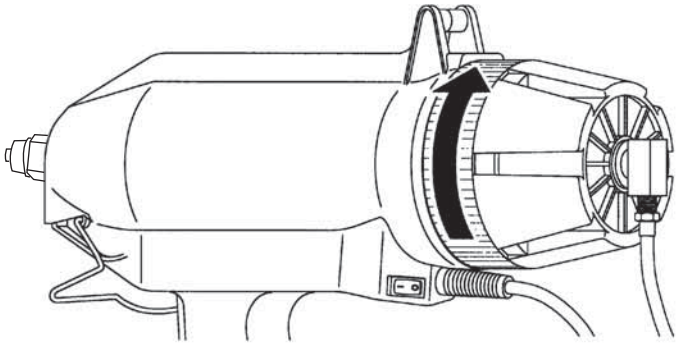

⚠Caution

Avoid contact with hot adhesive, cartridge, applicator tip, and metal components. **May cause burns.**

Important: Wear heat resistant gloves and safety glasses when using.

2. Remove end cap by rotating end cap counterclockwise.

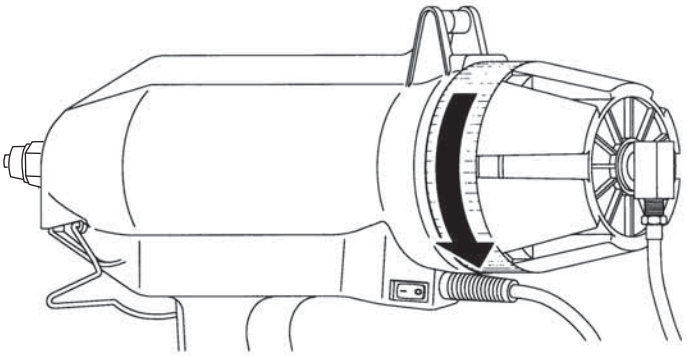

3. Inspect inside of end cap for improperly seated or damaged seal. Reposition or replace seal if necessary with end cap seal 62-9895-0004-6. If this does not produce adhesive flow, proceed to next step.

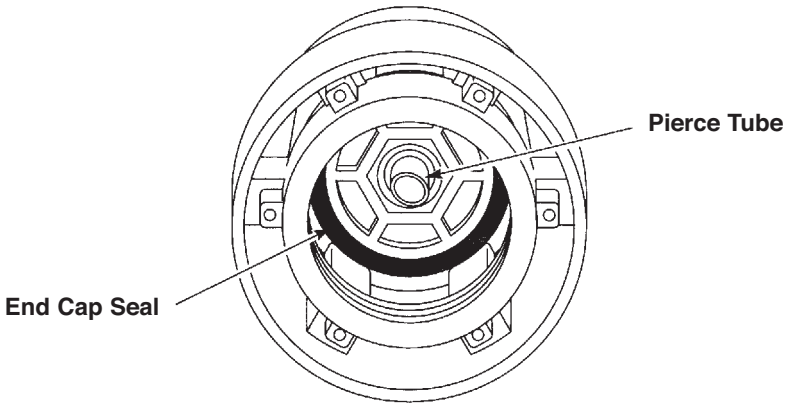

⚠Caution

Avoid contact with hot adhesive, cartridge, applicator tip, and metal components. **May cause burns.**

Important: Wear heat resistant gloves and safety glasses when using.

4. Inspect the 3M™ Scotch-Weld™ Polyurethane Reactive (PUR) Easy Adhesive Cartridge for dents or damage and replace with an undamaged cartridge. Dented or damaged cartridges will not allow a proper seal and air will leak past the cartridge.

5. If air leak occurs at connections on the end cap, disconnect air service and tighten connections.

6. If the connections or air line is damaged or broken, replace with air valve assembly 62-9845-0009-0.

7. If air supply line has been cut or damaged, replace air supply line 62-9895-0005-3.

8. If air leak occurs inside the handle, the two handle halves must be separated by following the disassembly procedure, page 24.

⚠WARNING

Disconnect air and electrical power and make sure applicator has cooled to room temperature before servicing. Failure to disconnect air and electrical power or failure to allow applicator to cool before servicing **may cause electrical shock or burns.** Read User's Manual before servicing.

Disassembly Procedure

9. Remove power cord from grounded electrical outlet and disconnect air supply.

10. Remove wire stand by pulling one side just enough to clear wire out of its pivot hole. Let the wire settle into the recess just forward of the pivot hole location.

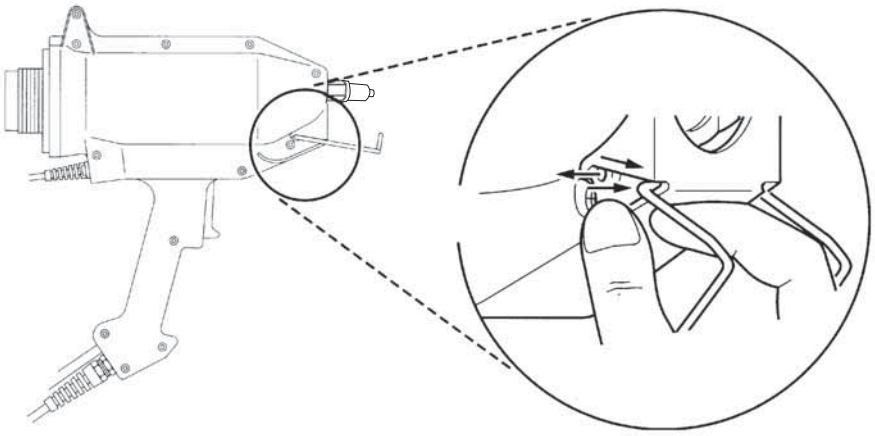

11. Repeat the above procedure on the opposite side of the applicator.

12. Pull either side of the wire stand over the housing, preferably at the lowest point – which is the small groove at the front. Remove the wire stand and set aside.

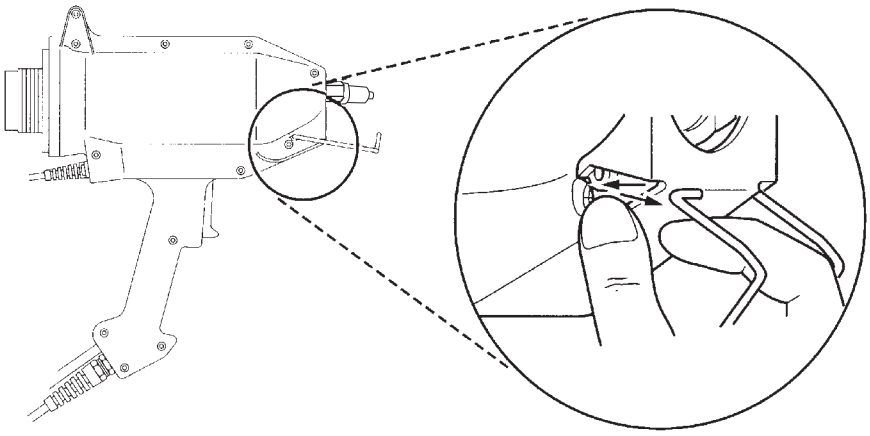

13. Remove end cap by turning it counterclockwise.

14. If possible, remove cartridge with attached nozzle from applicator.

15. Lay applicator on side so screw heads face upward.

16. Unscrew all twelve (12) Phillips head screws.

17. Gently pull to separate the two housing halves.

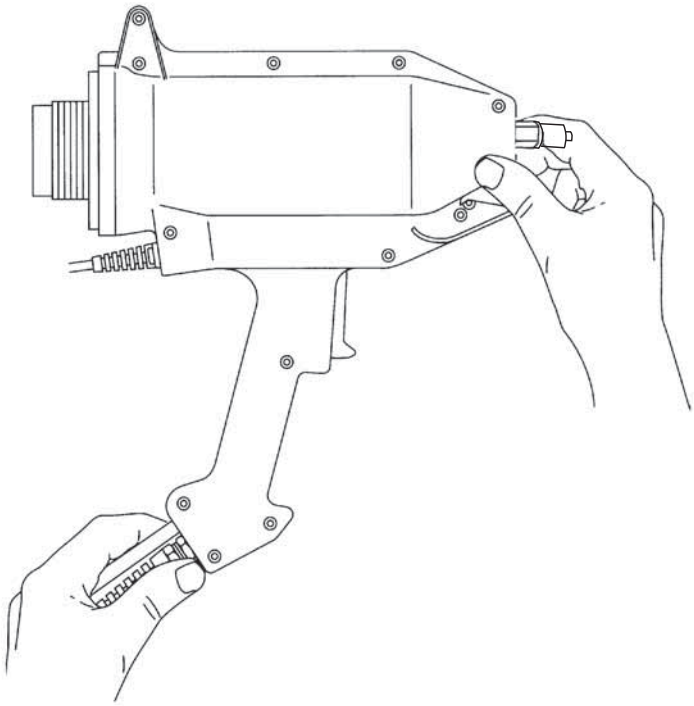

18. Hold the trigger in the upper housing and lift off.

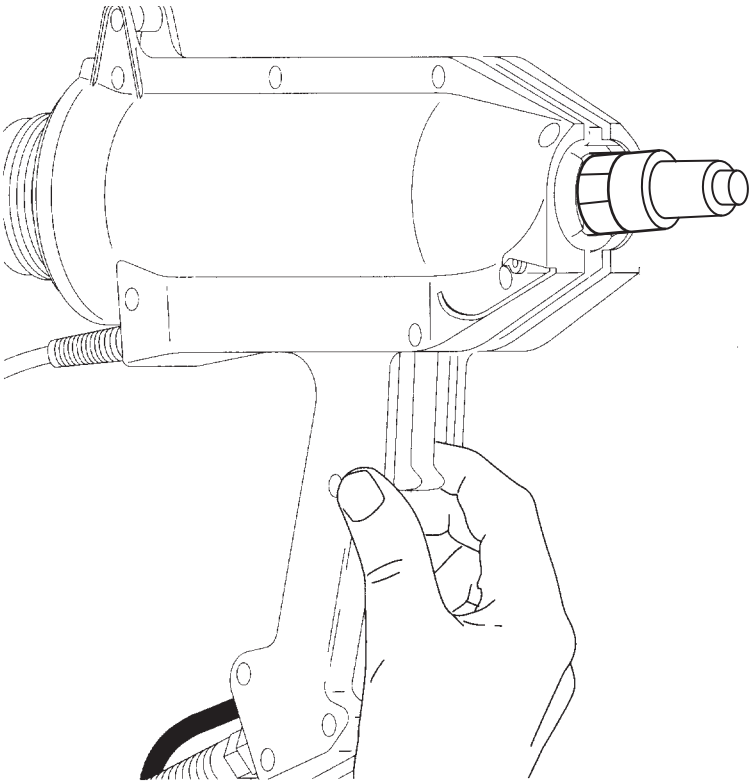

Troubleshooting (continued)

19. Lift and rotate the housing 180 degrees clockwise so both sides are open and all components are visible.

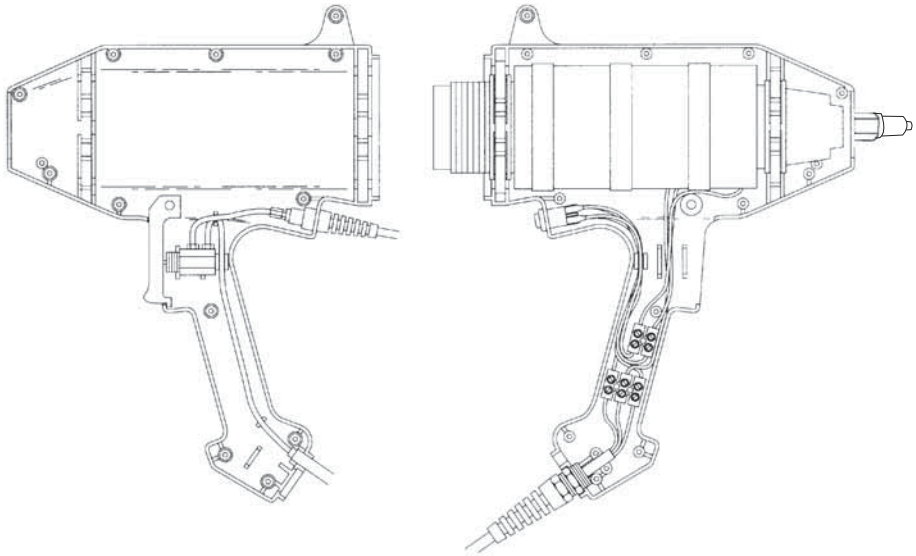

⚠WARNING

Use only 3M-specified replacement parts. Use of other replacement parts **may cause hazardous conditions or damage the applicator.**

20. Reconnect air supply set at 30-40 psi maximum to help locate air leak.

21. Inspect connections and retighten if necessary. If air valve is leaking or air line going to end cap is leaking or has been damaged, replace with air valve assembly 62-9845-0009-0.

22. If air supply line has been punctured, cut or has been disconnected from air valve assembly, replace or reconnect air supply lines or replace with air supply line 62-9895-0005-3.

23. After inspecting, tightening loose fittings, or replacing parts, reassemble handle halves by following Reassembly Instructions. See page 37.

Condition 2: No or Low Adhesive Flow/No Audible Air Leak

Conduct the following tests if there is NO audible air leak but the applicator heats.

1. Check air supply for a pinched line.

2. Remove applicator end cap by turning counterclockwise. Point the end cap away from you and others in the work area, and pull trigger. A steady air stream flowing from the pierce tube indicates air valve and air source are in working order. Proceed to next step. If there is no air flow, proceed to page 29. step 8.

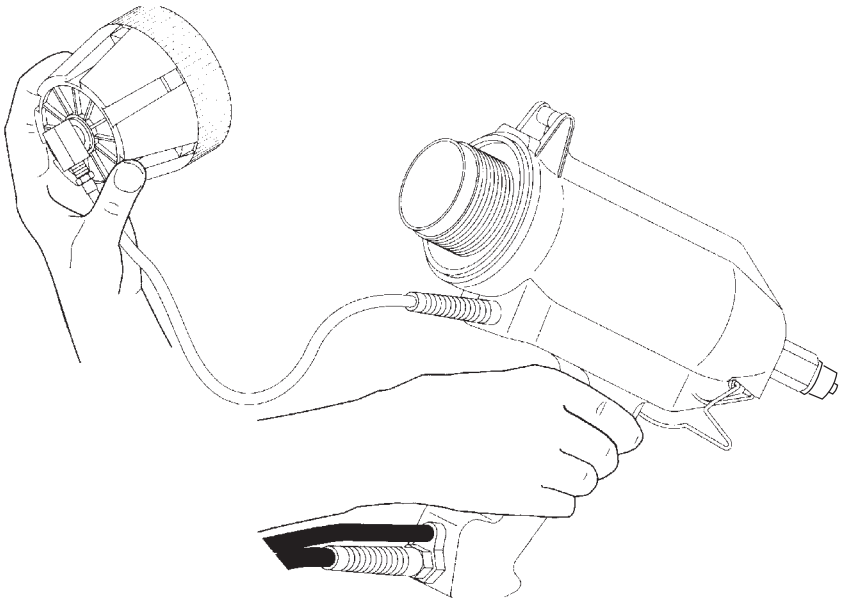

⚠ Caution

Do not connect the applicator to air supply with greater than 80 psi air pressure. **May cause hazardous conditions or damage the applicator.**

Important: For disposal of adhesive or adhesive components, please read and follow information found on the selected 3M™ Scotch-Weld™ Polyurethane Reactive (PUR) Easy Adhesive MSDS.

3. Replace and tighten end cap, turning it in a clockwise direction. Increases air pressure to approximately 80 psi. If adhesive begins to flow, readjust to desired pressure. If there is still no or low-adhesive flow, continue to next step.

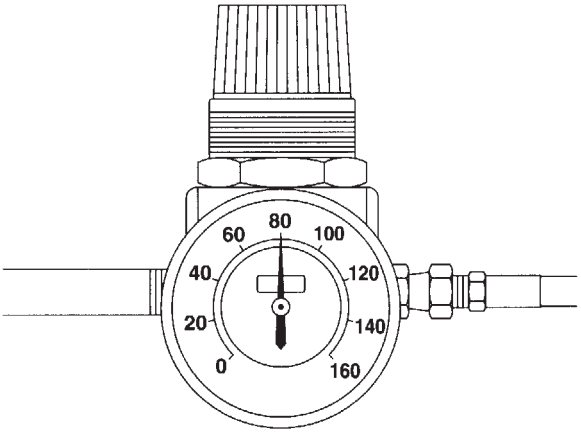

Troubleshooting (continued)

⚠WARNING

Do not clean or remove 3M™ Scotch-Weld™ Polyurethane Reactive (PUR) Easy Adhesive with heat, flame, or solvent. **May cause hazardous vapors or fire.** For additional health and safety information, see product label and Material Safety Data Sheet for Scotch-Weld Adhesive used.

4. Cured adhesive in the disposable nozzle could cause adhesive flow to become slow or stop.

5. Remove old plugged disposable nozzle and install new disposable nozzle 62-9845-0031-4.

6. If air flow to end cap does not occur when trigger is pulled, check to see that applicator is properly connected to a pressurized air regulator. If connections are properly made and pressure is at 30 psi minimum, proceed to next step.

7. Remove end cap from applicator. Place a 7/16-inch open end wrench on swivel fitting. Hold fitting with wrench and turn end cap in direction of arrow in diagram. Remove end cap and set aside.

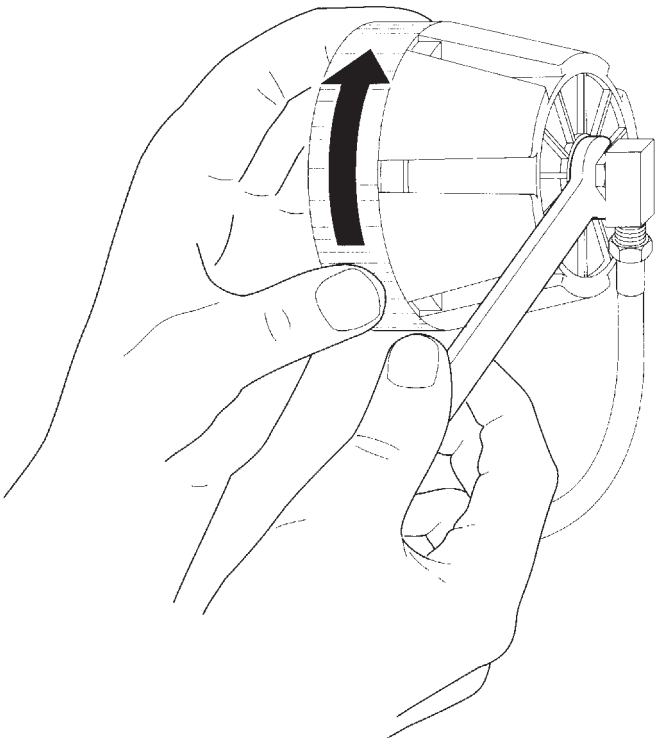

8. Hold swivel and point in a direction away from you and others in the work area and actuate the trigger. If a steady stream of air flows from the quick exhaust valve, replace the end cap 62-9895-0003-8. If no air flows from the quick exhaust valve, proceed to next step.

9. Remove swivel from air line fitting by holding the fitting with a 7/16-inch wrench while rotating the quick exhaust valve as shown in the diagram, using a 1/2-inch wrench.

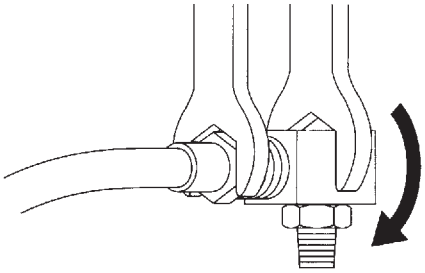

10. Hold the air line fitting and point in a direction away from you and others in the work area. Actuate the trigger. If a steady stream of air flows from the fitting, replace swivel connector 62-9845-9934-0.

11. Inspect end cap to make certain opening through the pierce tube is clean and free of obstruction. If obstruction in opening has occurred, replace end cap 62-9895-0003-8.

    If no air flows from the air line fitting, reassemble fitting onto swivel using reverse procedure found in step 9.

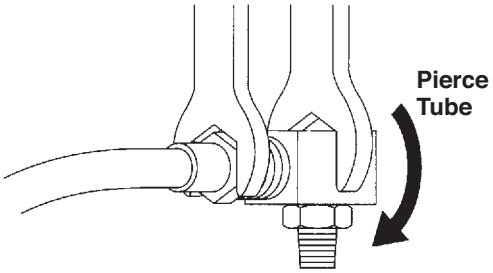

12. If no air flows from the air line fitting, reassemble fitting into swivel connector using reverse procedure found in step 11.

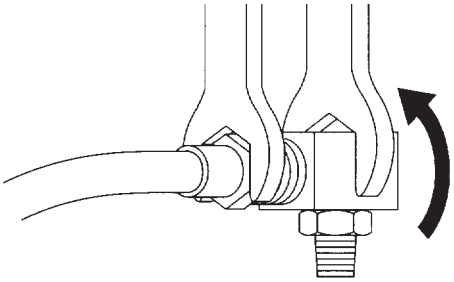

13. Reconnect end cap onto quick swivel connector using reverse procedure found in step 7.

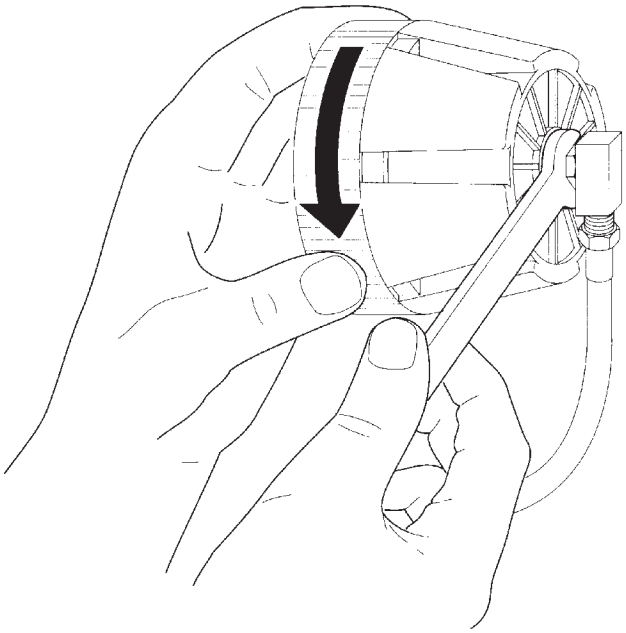

14. Disconnect main air line from air source.

15. While holding the brass fitting with a 7/16-inch open end wrench, loosen and remove the air coupler filter using a 9/16-inch open end wrench.

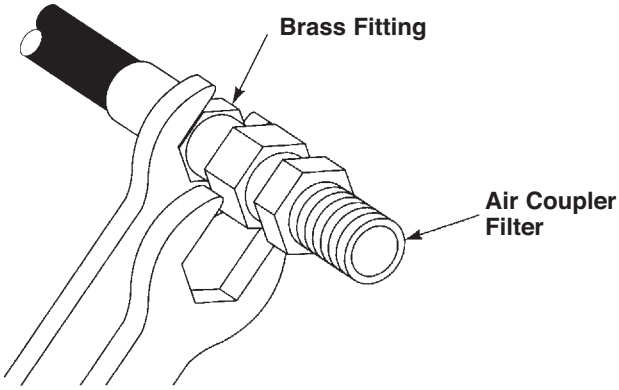

16. Connect the brass fitting to air source. With end cap removed from applicator and pointed in a direction away from you and others in the work area, pull the trigger. If steady stream of air flows from the pierce tube, replace coupler filter 62-9895-0001-2. If no air flows from the pierce tube, proceed to next step.

17. By conducting the above tests, all problems other than the air valve assembly have been eliminated. Replace air valve/trigger assembly 62-9845-0009-0.

Note

If after replacing air valve assembly, the applicator fails to operate properly, contact your local 3M representative.

Condition 3: Nozzle Drip

This problem may occur after a several day shutdown period because the material around the plunger in the rear of the cartridge has begun to cure. This problem should be eliminated after a short period of use or when a new adhesive cartridge is introduced. If dripping continues, replace disposable nozzle (62-9845-0031-4).

Condition 4: Slow Adhesive Shut Off

If after releasing the trigger on the applicator, adhesive continues to flow from the tip for a few seconds before shutting off, the air valve kit (62-9845-0009-0) may need replacement. **This can occur as a result of moist, oily or dirty air partially plugging the exhaust system.**

Condition 5: Applicator Will Not Heat

Important
Troubleshooting steps should be conducted by a qualified electrician or service person.

1. Check electrical outlet. If no power, contact electrician; if outlet has power, proceed to next step.

2. Push on/off switch to "on" position indicated by visible red portion of switch. If no heat, proceed to next step.

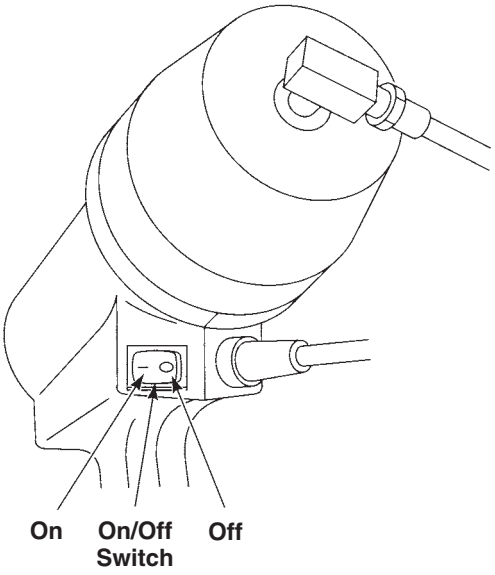

Important
Remove power cord from grounded electrical outlet and disconnect air supply before conducting any further evaluations or repairs.

⚠WARNING

Disconnect air and electrical power and make sure applicator has cooled to room temperature before servicing. Failure to disconnect air and electrical power or failure to allow applicator to cool before servicing **may cause electrical shock or burns.** Read User's Manual before servicing.

Disassembly Procedure

3. Remove wire stand by pulling one side just enough to clear wire out of its pivot hole. Let the wire settle into the recess just forward of the pivot hole location.

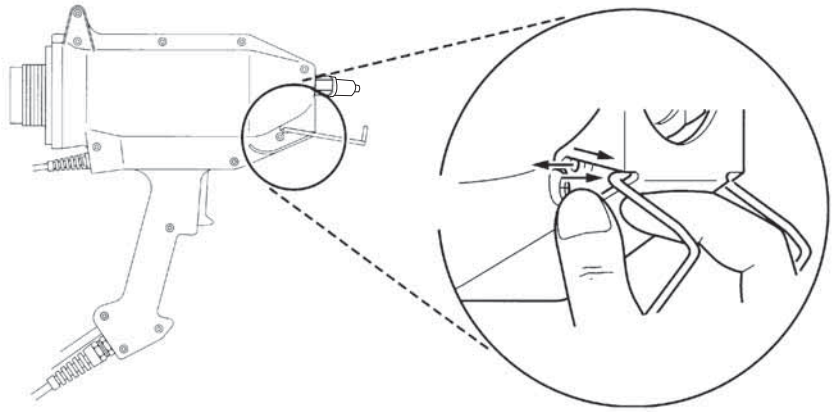

4. Do the same with the opposite side of the wire stand.

5. Pull either side of the wire stand over the housing, preferably at the lowest point – which is the small groove at the front. Remove the wire stand and set aside.

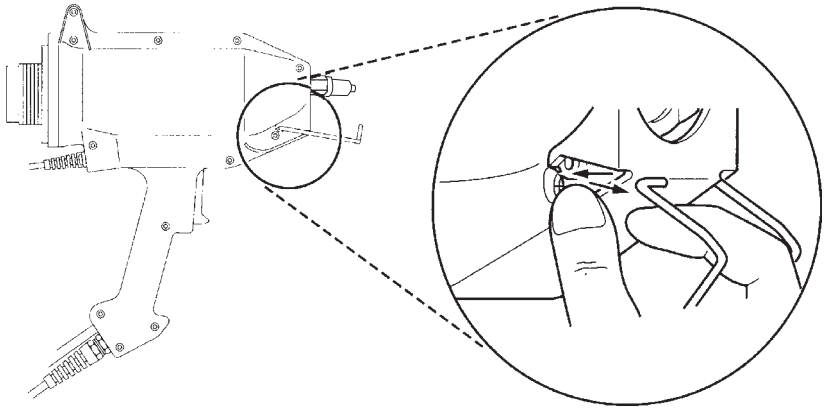

⚠ WARNING

Disconnect air and electrical power and make sure applicator has cooled to room temperature before servicing. Failure to disconnect air and electrical power or failure to allow applicator to cool before servicing **may cause electrical shock or burns.** Read User's Manual before servicing.

6. Remove end cap by turning counterclockwise.

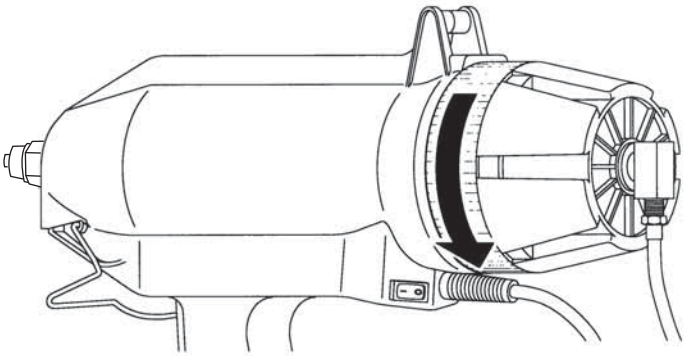

7. If possible, remove cartridge and nozzle.

8. Lay applicator on side so screw heads face upward.

9. Unscrew all twelve (12) Phillips head screws.

10. Gently pull to separate the two housing halves.

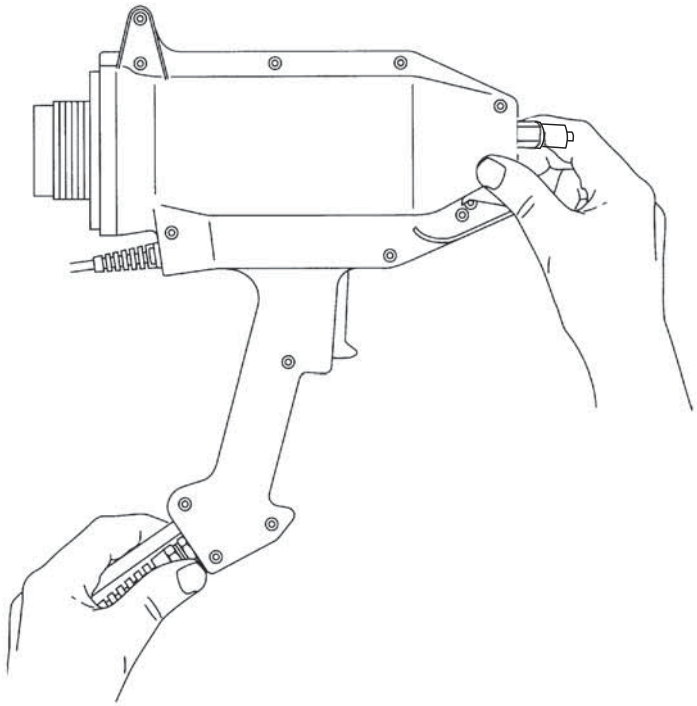

11. Hold the trigger in the upper housing and lift off.

⚠ WARNING

Disconnect air and electrical power and make sure applicator has cooled to room temperature before servicing. Failure to disconnect air and electrical power or failure to allow applicator to cool before servicing **may cause electrical shock or burns.** Read User's Manual before servicing.

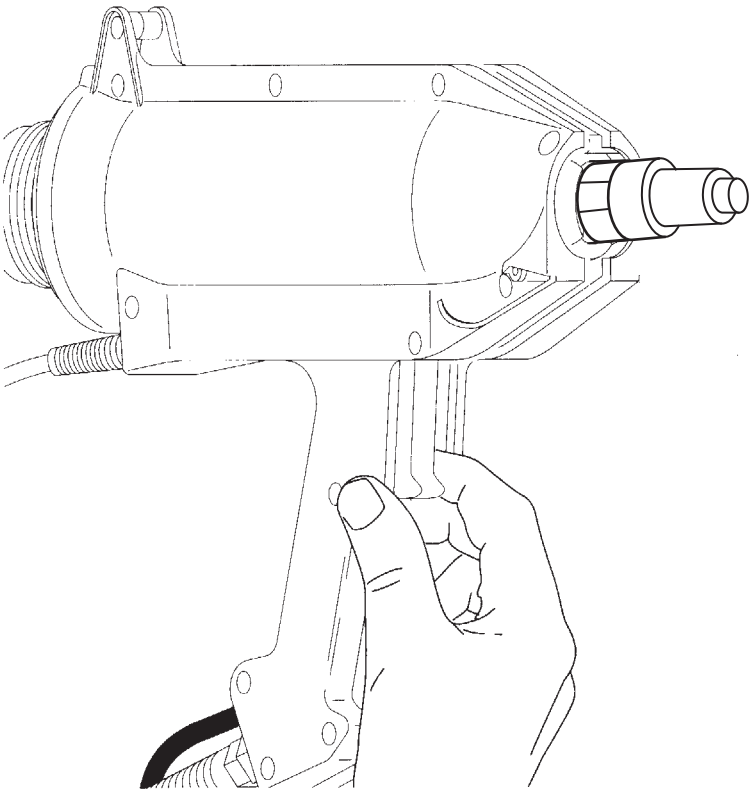

Troubleshooting (continued)

⚠WARNING

Disconnect air and electrical power and make sure applicator has cooled to room temperature before servicing. Failure to disconnect air and electrical power or failure to allow applicator to cool before servicing **may cause electrical shock or burns.** Read User's Manual before servicing.

12. Lift and rotate the housing 180 degrees clockwise so both sides are open and all components are visible.

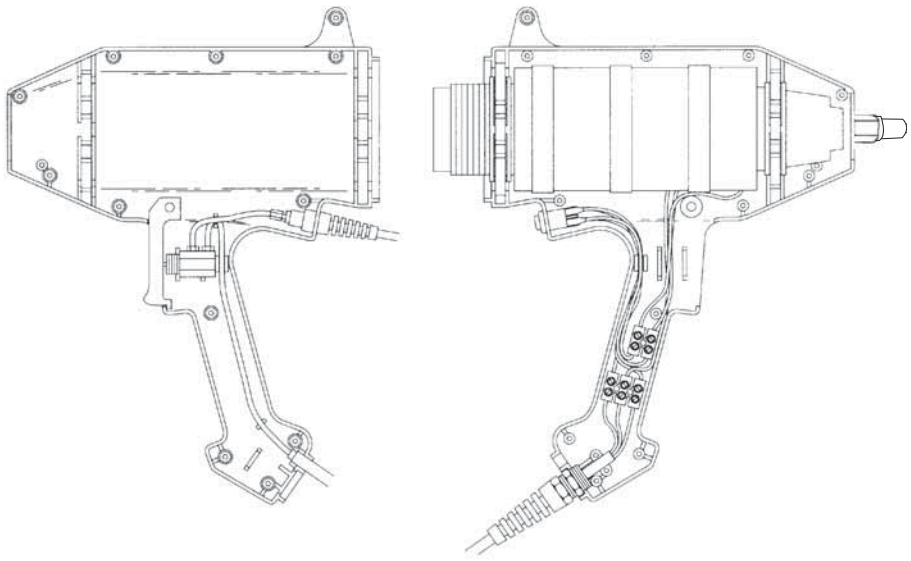

13. Inspect all wire connections for loose or disconnected wires by making certain screws in all connector blocks are securing the wires properly. If any connections are loose and have pulled out of connector blocks, reconnect and tighten connection per wiring diagram.

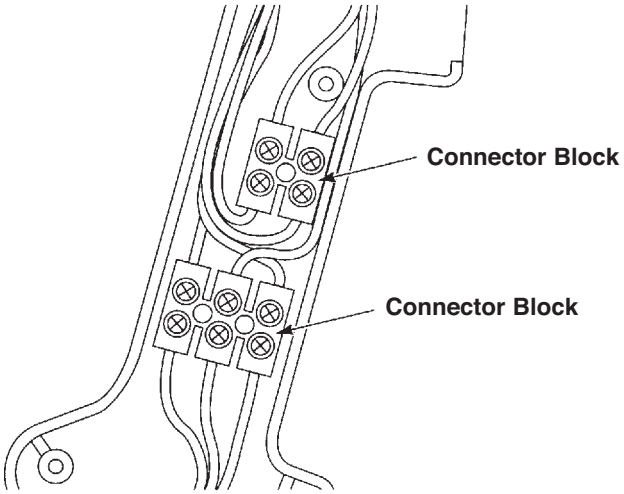

14. Use volt/ohm meter to check the heat tube assembly. Place one probe in upper left position of two pole connector blocks. With the other meter probe, touch the connector on upper right side of two pole connector.

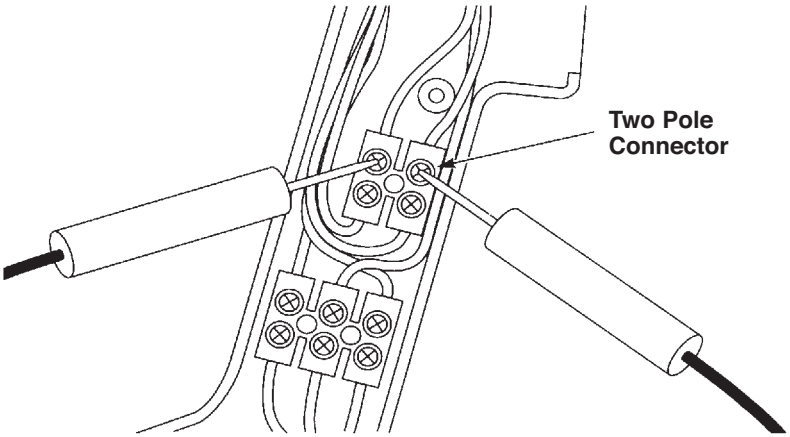

15. If no continuity exists and applicator is still within the 12 month warranty period. Contact your nearest 3M sales representative or authorized 3M™ Scotch-Weld™ Polyurethane Reactive (PUR) Easy Adhesive distributor. If applicator is past the 12 month warranty period, contact your nearest 3M sales representative or authorized 3M™ Scotch-Weld™ Polyurethane Reactive (PUR) Easy Adhesive distributor to inquire about a "refurbish" program.

    If continuity does exist, proceed to the next step.

⚠WARNING

Disconnect air and electrical power and make sure applicator has cooled to room temperature before servicing. Failure to disconnect air and electrical power or failure to allow applicator to cool before servicing **may cause electrical shock or burns.** Read User's Manual before servicing.

16. Using a volt/ohm meter to check on/off switch, **first push switch to "on" position** indicated by visible red portion of switch. Place one probe in upper left position of three pole connector block. With the other meter problem, touch the connector on upper side right of three pole connector block.

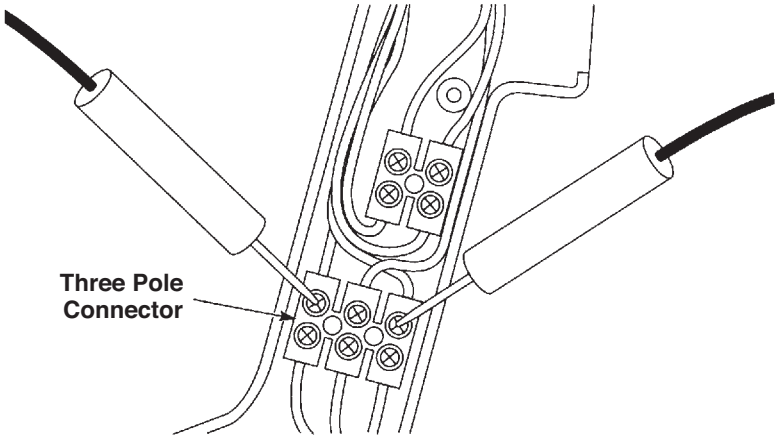

17. If no continuity exists, replace on/off switch assembly 62-9895-0024-4. If continuity exists, proceed to next step.

18. Using a volt/ohm meter to check power cord, place one probe in lower left position of three pole connector containing black wire. Connect the other probe to the left side of the electrical plug.

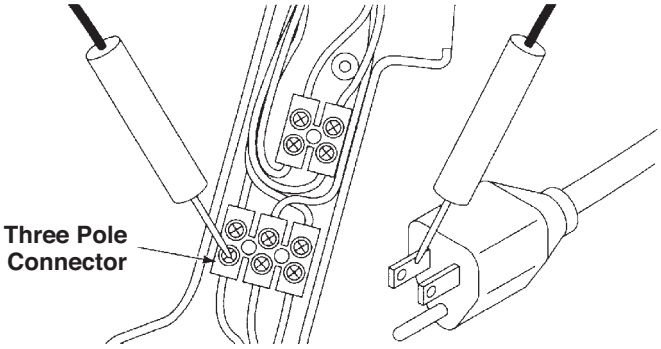

Move the cord back and forth to insure there is not a partial or intermittent connection.

19. If no or intermittent continuity exists, replace power cord assembly 62-9895-0021-0.

20. If continuity exists place one probe of the volt/ohm meter into lower right position of three pole connector containing white wire. Connect the other probe to the neutral side of the electrical plug. Move the cord back and forth to insure there is not a partial or intermittent connection.

⚠ WARNING

Disconnect air and electrical power and make sure applicator has cooled to room temperature before servicing. Failure to disconnect air and electrical power or failure to allow applicator to cool before servicing **may cause electrical shock or burns.** Read User's Manual before servicing.

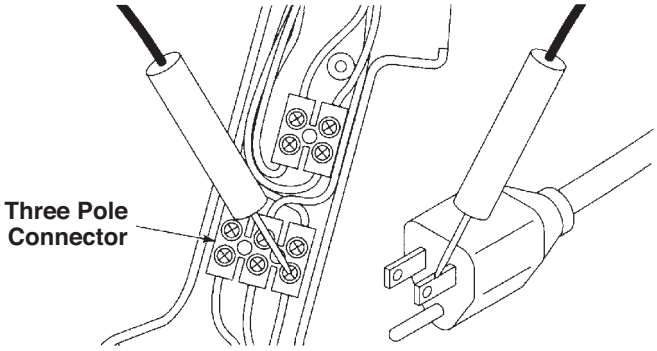

21. If no or intermittent continuity exists, replace power cord assembly 62-9895-0021-0.

22. If power cord has continuity but unit still does not heat, repeat troubleshooting steps or contact your local 3M representative.

Applicator Reassembly Procedure

The housing assembly is generally in reverse order of the disassembly procedure with the following precautions:

1. Make sure the trigger is on the valve button before locating the valve in position. Position the valve so the fittings are pointing away from you and down along the inside surface of the housing. The flat portion of the hex on the valve should be positioned as shown.

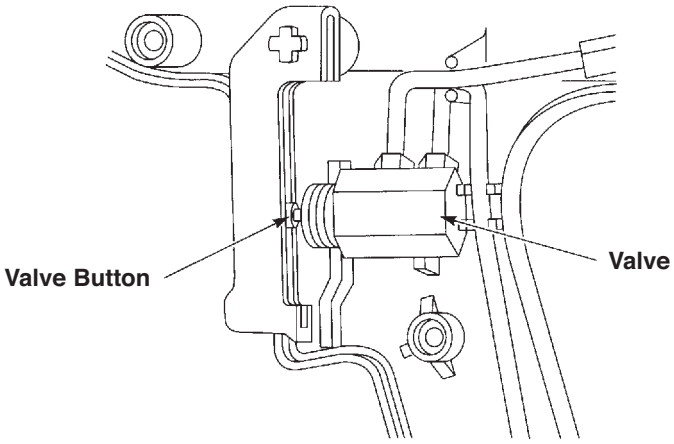

2. If thermal standoffs have been removed or have come out of housing, push the standoffs into position on the heat tube. Make sure they are fully engaged with the keys in the heat tube and there is not a gap between the opposing standoffs.

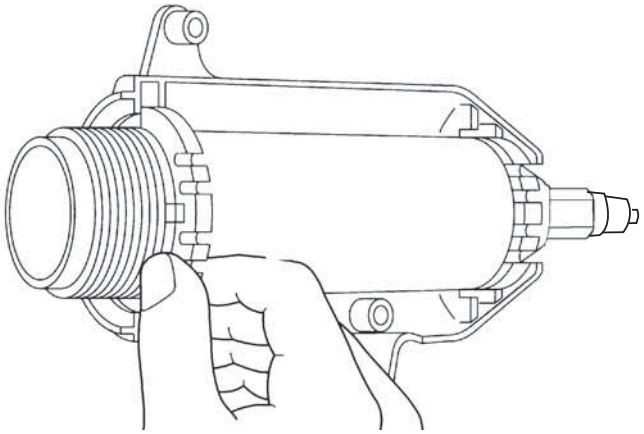

3. Hold air line in its groove at the bottom of the handle when placing the air side onto the electrical side.

4. Do not force the housing halves together. Recheck position of trigger and valve if they will not mate properly. Make sure heat tube is in its proper position if it has been removed.

5. Replace twelve (12) screws and tighten. Do not overtighten screws.

6. Connect electrical and air supplies.

7. After sufficient heating (up to 35 minutes may be required) check for proper operation.

⚠WARNING

Use only 3-prong grounded plug and properly grounded outlet. Failure to use properly grounded plug and outlet **may cause electrical shock.**

Important: If you are not sure of proper connections, get help from a qualified electrician or service person.

⚠Caution

Do not connect the applicator to air supply with greater than 80 psi air pressure. **May cause hazardous conditions or damage the applicator.**

Important: For disposal of adhesive or adhesive components, please read and follow information found on the selected 3M™ Scotch-Weld™ Polyurethane Reactive (PUR) Easy Adhesive MSDS.

Warranty/Important Notice/Limitation of Remedies/Limitation of Liability

During Warranty Period

Contact your authorized 3M™ Scotch-Weld™ Polyurethane Reactive (PUR) Easy Adhesive distributor.

After Warranty Period

The 3M™ Scotch-Weld™ Polyurethane Reactive (PUR) Easy Adhesive Applicator has been engineered to be durable and reliable. Recognizing that it will eventually need maintenance, we have made it easy to disassemble and repair.

Should your 3M Scotch-Weld PUR Easy Adhesive Applicator require repair, you can contact your local 3M representative to order replacement parts, or inquire about a refurbish program.

Important Notice

User is responsible for determining whether the 3M™ Scotch-Weld™ Polyurethane Reactive (PUR) Easy Adhesive Applicator is fit for a particular purpose and suitable for user's method of application.

Warranty

With respect to the 3M™ Scotch-Weld™ Polyurethane Reactive (PUR) Easy Adhesive Applicator, 3M warrants for 12 months from the date of purchase or use, whichever occurs first that this applicator will be free from defects in material and manufacture. With respect the 3M™ Scotch-Weld™ Polyurethane Reactive (PUR) Easy Refurbished Adhesive Applicator, 3M warrants for 30 days from the date of purchase or use, whichever occurs first that this applicator will be free from defects in material and manufacture. 3M MAKES NO OTHER WARRANTIES, EXPRESS OR IMPLIED, INCLUDING, BUT NOT LIMITED TO, ANY IMPLIED WARRANTY OF MERCHANTABILITY OR FITNESS FOR A PARTICULAR PURPOSE OR ANY IMPLIED WARRANTY ARISING OUT OF A COURSE OF DEALING, CUSTOM, OR USAGE OF TRADE. This warranty does not cover routine maintenance, normal wear and tear, or damage resulting from accident, misuse, alteration, corrosion, lack of reasonable care, service performed by an unauthorized repair service, use of unauthorized replacement parts or accessories, or installation, use, operation, or maintenance not in accordance with 3M recommended procedures, or use of adhesive cartridges not manufactured by 3M or not subject to 3M quality standards.

Limitation of Remedies

If the 3M™ Scotch-Weld™ Polyurethane Reactive (PUR) Easy Adhesive Applicator is proven to be defective within the warranty period stated above, THE EXCLUSIVE REMEDY, AT 3M'S OPTION, SHALL BE TO REFUND THE PURCHASE PRICE OF OR TO REPAIR OR REPLACE THE DEFECTIVE 3M APPLICATOR, provided that the defective applicator is, at 3M's choice, returned immediately to 3M or an authorized service representative designated by 3M, or made available at user's premises in a location suitable for servicing.

Limitation of Liability

3M shall not otherwise be liable for loss or damages, whether direct, indirect, special, incidental, or consequential, regardless of the legal or equitable theory asserted, including contract, negligence, warranty, or strict liability.

Notes:

Industrial Business
Industrial Adhesives and Tapes Division
3M Center, Building 21-1W-10, 900 Bush Avenue
St. Paul, MN 55144-1000
800-362-3550 * 877-369-2923 (fax)
www.3M.com/industrial

Recycled Paper
40% pre-consumer
10% post-consumer

Printed in U.S.A.
©3M 2005 78-8132-7766-8 (11/05)