Scotchlok™

Insulation Displacement Electrical Pigtail Connector 557

Data Sheet

Application

Use Scotchlok™ Pigtail 557 to electrically connect two wire ends and insulate the connection.

Wire Range

22-16 AWG solid or stranded, (0,5-1,0 mm^2 solid or stranded and 1,5 mm^2 solid) tinned or untinned copper conductors. For use with common thermoplastic insulated wires such as: T, TF, TFF, TFN, TFFN, AWN, TEW, SAE-GPT, with a maximum insulation diameter of .120 inches (3,0 mm).

Maximum recommended current for general purpose applications:
22 AWG - 3 Amps, 20 AWG - 4 Amps,
18 AWG - 7 Amps, 16 AWG - 10 Amps

Construction

U-Contact - Tin plated brass, .02 in. thick (0,5 mm)

Insulator - Flame retardant polypropylene
Color - Red

Weight

.0030 lb. (1,37 gm)

Recommended Installation Tools

3M™ Crimping Tool No. E-9BM
9" Linemans Pliers

Engineering Specification

The connector shall be UL Listed as a pressure cable connector shall be voltage rated 600 volts maximum, building wire; 1000 volts maximum signs, fixtures, and luminaires. The connector shall have a maximum operating temperature of 105˚C. The connector shall also meet the intent of the Standard for Portable Electric Lamps, UL 153, specifically Paragraph 14.2, when housed within the body of the lamp.

Regulatory Agencies

UL Listed as a Pressure Cable Connector
Tested per UL Standard 486C
UL File No. E23438
Operating Temperature: 105˚C (221˚F)
Voltage Rating: 600 volts max. building wire;
1000 volts max. signs and fixtures
Flammability Rating: UL94 V-2

CSA Certified-CSA Standard C22.2 No. 0, 188-M1983
CSA File No. LR15503
Operating Temperature: 105˚C (221˚F)
Voltage Rating: 600 volts max. building wire
1000 volts max. signs and luminaires.
Flammability Rating: C22.2 No. 0.6 V-2

Federal Specification W-S-610:

"Commercial package only"

Type	Class	Kind	Style
1	1	cu	G

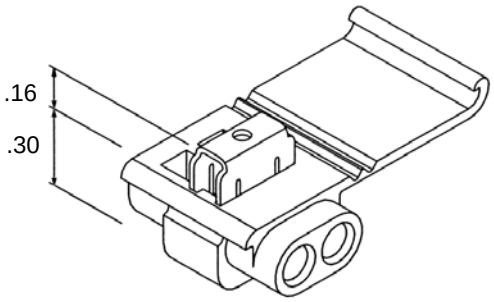

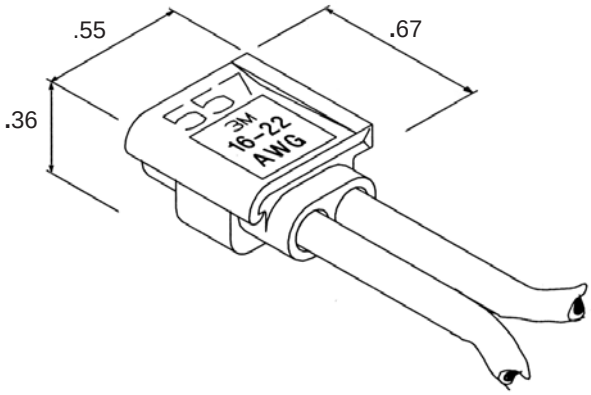

nstallation Instructions

⚠ WARNING

Turn power off before installing or removing terminal. All electrical work should be done according to appropriate electrical codes.

1. Insert unstripped wire completely and check their position in the inspection ports.
2. Hold tool perpendicular to the wire and make the connection by driving the u-connection down flush with the top of the insulator.
3. Close hinged top cover until latched.

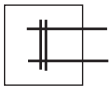

Pigtail Connector

3M and Scotchlok are trademarks of 3M Company.

UL is a trademark of Underwriters Laboratories.

CSA is a trademark of Canadian Standards Association.

IMPORTANT NOTICE

Before using this product, you must evaluate it and determine if it is suitable for your intended application. You assume all risks and liability associated with such use.

Warranty; Limited Remedy; Limited Liability. This product will be free from defects in material and manufacture as of the date of purchase. **3M MAKES NO OTHER WARRANTIES INCLUDING, BUT NOT LIMITED TO, ANY IMPLIED WARRANTY OF MERCHANTABILITY OR FITNESS FOR A PARTICULAR PURPOSE.** If this product is defective within the warranty period stated above, your exclusive remedy shall be, at 3M's option, to replace or repair the 3M product or refund the purchase price of the 3M product. **Except where prohibited by law, 3M will not be liable for any loss or damage arising from this 3M product, whether direct, indirect, special, incidental or consequential regardless of the legal theory asserted.**

3M

Electrical Products Division

6801 River Place Blvd.
Austin, TX 78726-9000
www.3M.com/elpd

Litho in USA
©3M 2003 78-8126-5928-8-A