LITHONIA LIGHTING®

Catalog Number	
Notes	
Type	

ARCHWAY™ PASSAGE™

Rough Service Fixture

VAP LED

CEILING/
SUSPEND MOUNT

FEATURES & SPECIFICATIONS

INTENDED USE — Ideal for use in applications where smart, energy-efficient fixtures are desired. Typical applications include parking garages, canopies, transportation, schools, hospitals, cold storage and exterior retail environments where moisture or dust is a concern. Polycarbonate enclosure protects fixture while remaining easy to service and clean. Not for use or installation in direct outdoor sunlight. Must be installed under canopy or covered ceiling. For direct sunlight installations, please refer to the FEX product family. **Certain airborne contaminants can diminish the integrity of acrylic and/or polycarbonate. Click here for Acrylic-Polycarbonate Compatibility table for suitable uses.**

CONSTRUCTION — UV-stabilized, injection-molded, impact-resistant, frosted polycarbonate housing with continuous poured in place, closed-cell gasket. 20-gauge steel channel and channel cover. Aluminum sheet metal board plate for thermal conduction and support. Captive, tamper-resistant, polycarbonate latches standard (8 Torx T-20 tamper-resistant screws included). Stainless steel latches also available. Fixture design allows for approximately 4% up-light.

OPTICS — UV-stabilized, injection-molded, impact-resistant, clear transparent and frosted, polycarbonate lens with aesthetic rib detail (.080" thick). Miro 5 aluminum reflector used to achieve wide distribution.

ELECTRICAL — Utilizes high-output LEDs integrated on a two-layer circuit board, ensuring cool-running operation. Standard 0-10V dimming. Integral 6kV/3kA surge protection, tested in accordance to IEEE/ANSI standards. >L88 at 60,000 hours (see chart on page 3).

INSTALLATION — Two stainless steel surface mount brackets standard (unless another mounting option is chosen) allowing for ceiling or suspended mount. A variety of mounting options are available including stainless steel mounting options: J-box mounting and mounting brackets for suspension with aircraft cable (cable not included). Optional stainless steel V-hooks available for chain hanging (chain not included). Surface conduit entry on one end or each end (WLFEND or WLFEND2) and on top (WLF or WLFIN) allow for rigid conduit entry. For horizontal and vertical mounting on a wall, application must be under a covered ceiling and QMB option recommended. 1/2" - 3/4" KO. When wall mounted the product will be rated for damp location only.

LISTINGS — CSA Certified to UL and C-UL standards. For use in ambient temperatures ranging from -20°F (-29°C) to 104°F(40°C). VAP LED is wet location listed for covered ceiling applications. IP65 and IP66 rated. VAP LED is NSF Splash Zone rated when suspended or ceiling mounted. When wall mounted the product will be rated for damp location only. DesignLights Consortium® (DLC) Premium qualified product and DLC qualified product. Not all versions of this product may be DLC Premium qualified or DLC qualified. Please check the DLC Qualified Products List at www.designlights.org/QPL to confirm which versions are qualified.

BUY AMERICAN ACT — Product with the BAA option is assembled in the USA and meets the Buy America(n) government procurement requirements under FAR, DFARS and DOT regulations. Please refer to www.acuitybrands.com/buy-american for additional information.

WARRANTY — 5-year limited warranty. This is the only warranty provided and no other statements in this specification sheet create any warranty of any kind. All other express and implied warranties are disclaimed. Complete warranty terms located at:
www.acuitybrands.com/support/warranty/terms-and-conditions

For installed Rough Service Product(s), Acuity warrants that, for the lifetime of the product(s), the polycarbonate lens and/or polycarbonate housing will withstand breakage resulting from occasional physical abuse and rough handling (the "Rough Service Warranty"), not withstanding the vandalism exclusion set forth at www.acuitybrands.com/support/warranty/terms-and-conditions

Note: Actual performance may differ as a result of end-user environment and application. All values are design or typical values, measured under laboratory conditions at 25 °C. Specifications subject to change without notice.

Specifications

Length: 54-3/4 (139.1)
Width: 8-1/4 (21.0)
Depth: 4-1/8 (10.5)
Weight: 13.5 lbs. (5.9 kg)

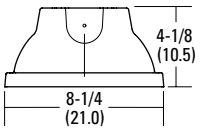

All dimensions are shown in inches (centimeters) unless otherwise noted.

A+ Capable Luminaire

This item is an A+ capable luminaire, which has been designed and tested to provide consistent color appearance and out-of-the-box control compatibility with simple commissioning.

- All configurations of this luminaire meet the Acuity Brands' specification for chromatic consistency
- This luminaire is part of an A+ Certified solution for nLight® or control networks marked by a shaded background*

To learn more about A+, visit www.acuitybrands.com/aplus.

*See ordering tree for details

VAP Linear Rough Service, LED

A+ Capable options indicated by this color background.

ORDERING INFORMATION Lead times will vary depending on options selected. Consult with your sales representative.

Example: VAP 4000LM FST MD MVOLT GZ10 40K 80CRI

VAP							
Series	**Nominal lumens**	**Diffuser**	**Distribution**	**Voltage**	**Driver**	**Color temperature**	**CRI**
VAP	4000LM 4,000 lumens	FST Frosted polycarbonate lens	MD Medium	MVOLT 120-277V	GZ10 0 - 10V dimming	30K 3000K	80CRI 80 CRI
	6000LM 6,000 lumens	PCL Clear polycarbonate lens	WD Wide	120 120V		35K 3500K	90CRI 90 CRI
	8000LM 8,000 lumens‡			277 277V		40K 4000K	
	12000LM 12,000 lumens‡			HVOLT 347-480V		50K 5000K	
	15000LM 15,000 lumens‡			347 347V			
				480 480V			

Options

Emergency:

BGTD	Bodine® generator transformer device‡
BSL722C	Bodine® emergency LED battery pack for -20°C and up, CA Title 20 Noncompliant‡
E15WCP	Emergency battery pack, 15W constant power, Certified in CA Title 20 MAEDBS‡

Other Options:

BAA	Buy America(n) Act Compliant
DL	Damp location
LSC	Lens safety clip
SPD	Surge protection device‡
WLF	Wet location fitting (two outboard, top)‡
WLFIN	Wet location fitting (two inboard, top)‡
WLFEND	Wet location fitting (one end)
WLFEND2	Wet location fitting (both ends)‡

Cord Sets:

CS89	Cord only (no plug), 16 gauge, 3 conductors, 6ft, white, wet location‡
CS88	Brad Harrison Mini-Change® cordset with straight blade plug, 16 gauge, 3 conductors, 6ft, yellow‡
CS88L12	Brad Harrsion Mini-Change® cordset with straight blade plug, 16 gauge, 3 conductors, 12ft, yellow‡

Mounting Brackets:

CMB	Chain-mount suspension bracket
JSB	Junction box snap-bracket
STSL	Stainless steel tamper resistant latches
QMB	Quick-mount ceiling bracket

Individual Controls: ‡

MSI10NWL	360° Low mount sensor, (8-15' mounting heights), outdoor PIR, ON/OFF occupancy, wet location (LINK)
MSI102L3VWL	360° Low mount sensor, (8-15' mounting heights), outdoor PIR, occupancy controlled dimming (bi-level), wet location (LINK)
MSI10NWL DSCNWL	360° Low mount sensor, (8-15' mounting heights), outdoor PIR, ON/OFF photocell, wet location (LINK)

nLight® Wireless: ‡

NLTAIR2 RSBOR10	nLight® Air Generation 2 enabled, 360° low mount sensor, (8-15' heights), (LINK)

Accessories: *Order as separate catalog number. (Ships separately)*

VAPSMB	Surface-mount bracket
VAPQMB	Quick-mount ceiling bracket
VAPCMB	Chain-mount bracket
VAPJSB	Junction box snap bracket
HC36 M12	Wire hook and 36" chain set‡
HC36 STS M12	Wire hook and 36" chain set‡
RK1 T20BIT U	Hex base driver bit, Torx T20 Tamper resistant screws with center reject pin

‡ Option Value Ordering Restrictions

Option Value	Restriction
8000LM	Not available with BSL722C.
12000LM	Not available with BSL722C or E15WCP.
15000LM	Not available with BSL722C, E15WCP, HVOLT, 347 or 480. Maximum ambient temperature 35°C.
BGTD	Must specify voltage. Not available with HVOLT, 347 or 480. If used with 8000LM, 12000LM or 15000LM, maximum ambient temperature is 35°C. SPD is standard and does not require specification in nomenclature. Not available with battieries.
BSL722C	Not available with HVOLT, 347 or 480. SPD is standard and does not require specification in nomenclature. Maximum ambient temperature 35°C.
CS88, CS88L12	Must specify voltage. 6 foot is the standard cord length. Other lengths are available by specifying the cord length in the nomenclature. Example: CS88L15.
CS89	6 foot is the standard cord length. Other lengths are available by specifying the cord length in the nomenclature. Example: CS89L15.
E15WCP	Utilizes PS1555CP. Not available with HVOLT, 347 or 480. SPD is standard and does not require specification in nomenclature. Minimum ambient temperature is 0°C. Maximum mounting height is 25ft.
HC36, HC36 STS	Requires CMB (chain mount bracket) option.
Individual Controls	Must specify voltage. Not available with HVOLT, 347, 480 or other sensors. SPD is standard and does not require specification in nomenclature.
nLight® Wireless	Must specify voltage. Not available with HVOLT, 347, 480 or other sensors. SPD is standard and does not require specification in nomenclature. Normal luminaires (non-emergency) can be used as a normal power sensing device for nearby nLight AIR devices and luminaires with EM emergency options.
SPD	For additional protection up to 10kV. Not available with BSL722C, E15WCP, BGTD, MSI10NWL, MSI102L3VWL and MSI10NWL DSCNWL. The SPD is already included when the fixture is ordered with those options. SPD will not be called out in the nomenclature.
WLF, WLFIN, WLFEND	Utilizes 5/8" long NPT threaded hub.
WLFEND2	Not available with cordsets or sensor options. Utilizes 5/8" long NPT threaded hub.

© 2012-2022 Acuity Brands Lighting, Inc. All rights reserved.

DIMENSIONS

All dimensions are shown in inches (centimeters) unless otherwise noted.

Specifications subject to change without notice.

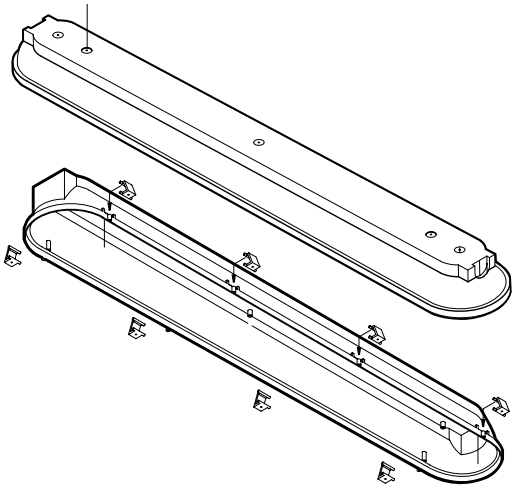

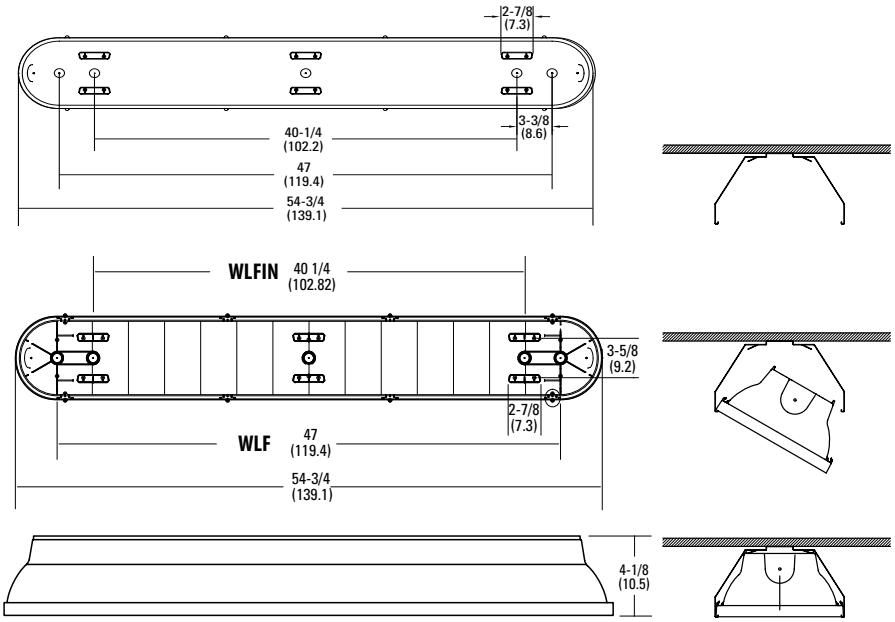

MOUNTING ACCESSORIES

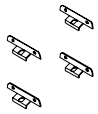

CMB - Chain Mounting Brackets

JSB - Junction Box Mounting Bracket

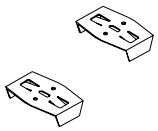

QMB - Quick-Mount Mounting Brackets

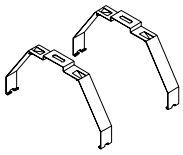

SMB - Surface Mount Brackets (ship with fixture as standard)

ARCHWAY™ PASSAGE™ LED Specification Matrix											
Nominal lumens	**Distribution**	**Initial delivered lumens @ 80CRI with clear polycarbonate lens**				**Initial delivered lumens @80CRI with frosted polycarbonate lens**				**Wattage @120V**	**Comparable source**
		30K	**35K**	**40K**	**50K**	**30K**	**35K**	**40K**	**50K**		
4000LM	MD	4295	4446	4517	4647	3695	3777	3887	3998	33	2-lamp 32W T8, 1-lamp 54W T5, 70W HID
	WD	4208	4357	4426	4553	3623	3750	3810	3919		
6000LM	MD	6013	6226	6325	6506	5174	5357	5443	5598	49	3-lamp 32W T8, 2-lamp 54W T5, 100W HID
	WD	5892	6100	6198	6375	5072	5251	5335	5488		
8000LM	MD	8348	8643	8781	9032	7183	7437	7556	7772	67	4-lamp 32W T8, 2-lamp 54W T5, 150W HID
	WD	8180	8469	8604	8850	7042	7290	7407	7618		
12000LM	MD	11742	12156	12350	12703	10103	10460	10627	10931	99	6-lamp 32W T8, 3-lamp 54W T5, 250W HID
	WD	11505	11911	12101	12447	9904	10254	10417	10715		
15000LM	MD	14519	15031	15271	15708	12493	12934	13140	13516	115	6-lamp 32W T8, 4-lamp 54W T5, 250W HID
	WD	14226	14728	14963	15391	12246	12679	12881	13249		

Lumen Mantenance @ 25C

Operating Hours	0	10,000	20,000	25,000	35,000	50,000	60,000	75,000	100,000
4000LM	1	0.980	0.973	0.969	0.962	0.952	0.95	0.935	0.919
6000LM	1	0.972	0.962	0.957	0.950	0.933	0.923	0.909	0.886
8000LM	1	0.962	0.947	0.94	0.925	0.903	0.889	0.868	0.834
12000LM	1	0.970	0.960	0.952	0.940	0.922	0.910	0.900	0.865
15000LM	1	0.969	0.956	0.949	0.936	0.917	0.905	0.886	0.857

© 2012-2022 Acuity Brands Lighting, Inc. All rights reserved. Rev. 11/08/2022

OPTIONS AND ACCESSORIES

The VAP Series fixture offers numerous options for almost every electrical and optical component, including a long list of field-installable accessories.

rSBOR/SBOR – Fixture Mount Sensor (see www.sensorswitch.com for additional information)

- 360° coverage
- On/Off dim
- Photocell optional
- IP66 rated
- Photocell and 0-10VDC dimming options.

Fixture sensor nomenclature	RSBOR/SBOR sensor nomenclature
For shortest lead times use one of the following SBOR configurations	
NLTAIR2 RSBOR10	RSBOR 10 EB4 WH G2
MSI10NWL	SBOR 10 OEX EB4 WH
MSI102L3VWL	SBOR 10 OEX D EB4 WH 3V
MSI10NWL DSCNWL	SBOR 10 OEX P EB4 WH

COVERAGE PATTERNS

PARKING GARAGE / LOW MOUNT APPLICATIONS

In general, the SBOR 10 is recommended for 8-15 ft (2.44-4.57 m) mounting and provides a coverage area radius for walking motion of greater than 2x the mounting height. The SBOR 10 ODP is ideal for parking garage and low pole mount applications. When mounted 10 ft high, for example, on a luminaire in a parking garage, the sensor's coverage for walking motion extends out 30 ft in a 360º pattern. This closely matches the lighting distribution of a typical parking garage luminaire. When mounted to a light pole, for example, in a parking lot or along a path, the sensor provides 270º of coverage (90º is blocked by the pole). Note, walking askew to sensor typically results in earlier detection than walking directly at sensor.

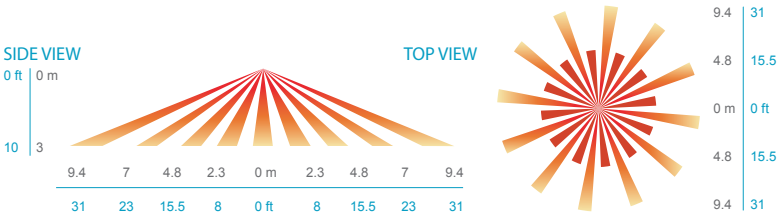

Coverage Pattern of Low Mount Lens Option (SBOR 10)

© 2012-2022 Acuity Brands Lighting, Inc. All rights reserved.