LITHONIA LIGHTING®

Catalog Number
Notes
Type

LED Enclosed and Gasketed

DMW2

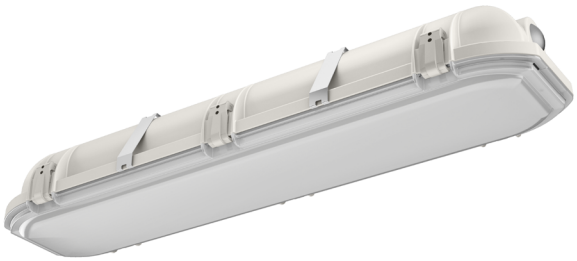

FEATURES & SPECIFICATIONS

INTENDED USE —For areas that require good vertical illumination and excellent glare control at low mounting heights. Ideal for open areas, retail spaces and aisles. Not for use or installation in direct outdoor sunlight. Must be installed under canopy or covered ceiling. For direct sunlight installations, please refer to the FEX product family. **Certain airborne contaminants can diminish the integrity of acrylic and/or polycarbonate. Click here for Acrylic-Polycarbonate Compatibility table for suitable uses.**

Certain airborne contaminants may adversely affect the functioning of LEDs and other electronic components, depending on various factors such as concentrations of the contaminants, ventilation, and temperature at the end-user location. Click here for a list of substances that may not be suitable for interaction with LEDs and other electronic components.

CONSTRUCTION — One-piece 5VA rated fiberglass housing with integral perimeter channel utilizes continuous poured-in-place NEMA 4X gasket. Simple two-piece design consists of housing and optical assembly to streamline installation process. Polymeric latches positively attach to housing and keep from becoming a hindrance during install.

OPTICS — Injection-molded, acrylic lens (.080" thick), provides high impact-resistance comparable to 100% DR. F1 rated for outdoor use, lenses resist breaking, yellowing or becoming brittle over time. UV stabilized polycarbonate diffuser available (.080" thick) in clear or frosted for additional impact strength. Polycarbonate lens is recommend for lower mounting heights where vandal protection is desired.

ELECTRICAL — Tool-less one piece optical assembly combines LEDs and lens into one component. Optical assembly easily connects to housing with plug and play harness, eliminating time consuming wiring connections. High-efficiency drivers operate 120-480V offered with 0-10V dimming, allowing granular control when coupled with wireless networking controls. Luminaire Surge Protection Level: Designed to withstand up to 2.5kV/0.75kA per ANSI C82.77-5-2015.

L85 at 60,000 hours.

INSTALLATION — Two-piece design makes installations faster than ever by simplifying wiring connections. Power connection is easily accommodated through pre-drilled holes at each end, optional wet location fittings available for maximum flexibility.

Stainless steel (#316) surface spring-mounting brackets with bail wires standard (2 included) allow for ceiling, wall or suspended mount.

Swivel stem(provided by others) when pendant mounting. Factory installed junction box option accommodates up to 4X4 sized boxes and includes integrated gasket to maintain wet location listings.

Quick Mount Bracket (QMB) ships installed on fixture and is recommended for fastest surface mount installs, ideal for end to end installations or larger jobs.

LISTINGS — CSA Certified to UL and C-UL standards. NEMA 4X rated. IP ratings: IP65 and IP66 rated. See page 3 for ambients.

NSF listed for Splash Zone II.

DesignLights Consortium® (DLC) Premium qualified product and DLC qualified product. Not all versions of this product may be DLC Premium qualified or DLC qualified. Please check the DLC Qualified Products List at www.designlights.org/QPL to confirm which versions are qualified.

BUY AMERICAN ACT — Product with the BAA option is assembled in the USA and meets the Buy America(n) government procurement requirements under FAR, DFARS and DOT regulations. Please refer to www.acuitybrands.com/buy-american for additional information.

WARRANTY — 5-year limited warranty. This is the only warranty provided and no other statements in this specification sheet create any warranty of any kind. All other express and implied warranties are disclaimed. Complete warranty terms located at: www.acuitybrands.com/support/warranty/terms-and-conditions

Note: Actual performance may differ as a result of end-user environment and application. All values are design or typical values, measured under laboratory conditions at 25 °C. Specifications subject to change without notice.

A+ Capable Luminaire

This item is an A+ capable luminaire, which has been designed and tested to provide consistent color appearance and out-of-the-box control compatibility with simple commissioning.

- All configurations of this luminaire meet the Acuity Brands' specification for chromatic consistency
- This luminaire is part of an A+ Certified solution for nLight® control networks marked by a shaded background*

To learn more about A+, visit www.acuitybrands.com/aplus.

*See ordering tree for details

DIMENSIONS

All dimensions are shown in inches (centimeters) unless otherwise noted.

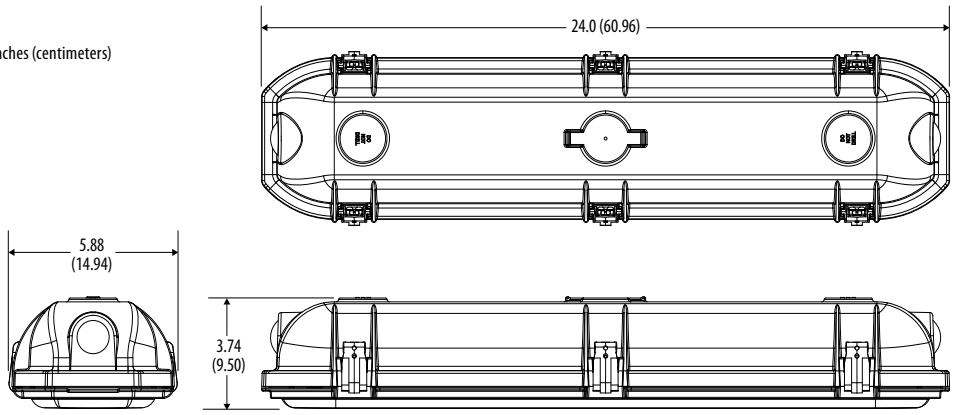

PHOTOMETRICS

Please see www.lithonia.com.

A+ Capable options indicated by this color background.

ORDERING INFORMATION Lead times will vary depending on options selected. Consult with your sales representative. **Example:** DMW2 L24 4000LM PCL MD MVOLT GZ10 40K 80CRI

Series[1]	Length	Nominal lumens	Diffuser	Distribution	Voltage	Driver	Color temperature	Color rendering index
DMW2 LED wet location	L24 24"	2000LM 2,000 lumens 3000LM 3,000 lumens 4000LM 4,000 lumens	ACL Acrylic AFL Frosted acrylic PCL Polycarbonate PFL Frosted Polycarbonate	MD Medium distribution WD Wide distribution	MVOLT 120-277V 120 120V 208 208V 240 240V 277 277V 347 347V[1] 480 480V[1]	GZ10 0-10V Dimming	30K 3000 K 35K 3500 K 40K 4000 K 50K 5000 K	80CRI 80 CRI 90CRI 90 CRI

Options

PS1050	Emergency LED battery pack for 0°C and up (1400 lumens), 10W, CA Title 20 noncompliant [2]	CS88	6' Brad Harrison 16/3 cord and straight blade plug set, NEMA 4X rated [8]	MSI10NWL	Low mount 360 integral motion sensor, wet location, On/Off operation[11]
E10WCP	EM Self-diagnostics battery pack, 10W, Constant Power Certified in CA Title 20 MAEDBS [2,3]	CS88L12	12' Brad Harrison 16/3 cord and straight blade plug set, NEMA 4X rated [8]	MSI102L3VWL	Low mount 360 integral motion sensor, wet location, High/Low operation (3 level)[11]
PMP4X	Pendant monopoint with NEMA4X fitting (not available with JSB option)[3,4]	CS88R	Brad Harrison receptacle, NEMA 4X rated [9]	MSI10NWL DSCNWL	low mount 360 integral motion sensor, wet location , On/Off operation for motion sensing, override Off due to daylight[11]
WLFEND	Wet location fitting (one fitting out end)[5]	NOM	Nom certified	NLTAIR2 RSBOR10	nLight AIR Generation 2 enabled 360° low mount motion sensor[12]
WLFEND2	Wet location fitting (fittings out both ends)[6]	TPS	TorxT10 tamper-resistant screws		
JSB	Junction box snap-bracket[7]	STSL	Stainless steel latches		
QMB	Quick-mount ceiling bracket[7]	SPD	10KV surge protection device [10]		
CS89	6' white cord, 16/3, no plug, wet location[8]	BAA	Buy America(n) Act Compliant		
CS89L12	12' white cord, 16/3, no plug, wet location[8]				

Accessories: *Order as separate catalog number.*

RK1 T10BIT W/PIN U	Hex-base driver bit, Torx TX10, for tamper-resistant screws with center reject pin
DMW2WLF	Wet location fitting
DMW2QMB	Quick-mount ceiling bracket

Notes

1. Plastic latches supplied as standard. Provided with 2X KO plugs at both ends.
2. Not available with JSB, PMP4X mounting options. Not available with CS88 cord sets or CS88R receptacle. Must specify voltage. Not available with 347, 480V. Maximum ambient temperature 25°C.
3. Not for field install.
4. Not available with PS1050 option. Not available with QMB, JSB mounting options.
5. Not available with WLFEND2. Not available with PS1050. Not available with cordsets or sensors.
6. Not available with WLFEND, PS1050, CS cord sets, or MSI sensors.
7. Not available with other mounting options
8. Not available with other cord sets. Not available with PS1050 option.
9. Receptacle only. Not available with PS1050.
10. Not available with PS1050, SBOR & RSBOR.
11. Not available with other external MSI sensors or WLFEND2. Must specify voltage.
12. Not available with other external MSI sensors or WLFEND2. Normal luminaires (non-emergency) can be used as a normal power sensing device for nearby nLight AIR devices and luminaires with EM emergency options.

© 2015-2022 Acuity Brands Lighting, Inc. All rights reserved.

OPERATIONAL DATA (80 CRI*)					
Package	Input Wattage	CCT	AFL Lumens (LPW)	ACL Lumens (LPW)	Comparable Light Source
2000LM	18	30K	2419 (134)	2419 (134)	1-32T8 lamp
		35K	2481 (138)	2556 (142)	
		40K	2536 (141)	2612 (145)	
		50K	2661 (148)	2740 (152)	
3000LM	27	30K	3483 (129)	3587 (133)	2-32T8 lamps
		35K	3572 (132)	3680 (136)	
		40K	3651 (135)	3761 (139)	
		50K	3831 (142)	3946 (146)	
4000LM	40	30K	4631 (116)	4770 (119)	3-32T8 Lamps, 2-54T5HO lamps
		35K	4751 (119)	4893 (122)	
		40K	4855 (121)	5001 (125)	
		50K	5094 (127)	5247 (131)	

CSA LISTED AMBIENT RATING*			
Package	Bare Fixture	X-Point/Sensor	Emergency
2000LM	40°C	35°C	0 to 25°C
3000LM	40°C	35°C	0 to 25°C
4000LM	-40 to 40°C	35°C	0 to 25°C

*Minimum Ambient is -20°C unless noted.
** Suspended 18" from ceiling.

OPTIONS AND ACCESSORIES

The DMW2 Series fixture offers numerous options for almost every electrical and optical component, including a long list of field-installable accessories.

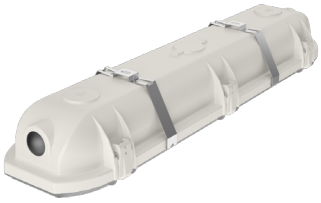

SMB
Surface mounting bracket
(ships standard with fixture)

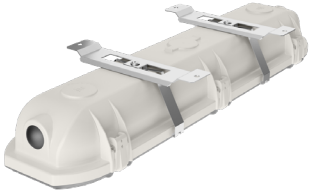

QMB
Quick mounting bracket
field installable option order as DMW2QMB

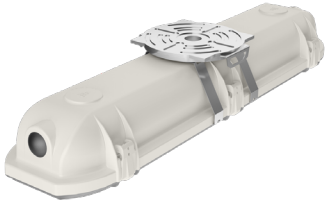

JSB
Junction mounting bracket
(factory installed only)
(Not intended for wall mounting.
Voids IP65 rating.)

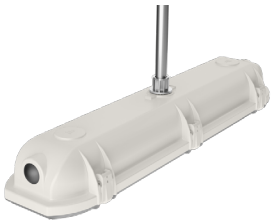

PMP4X
Pendant monopoint
(factory installed only)

© 2015-2022 Acuity Brands Lighting, Inc. All rights reserved.

OPTIONS AND ACCESSORIES

The DMW2 Series fixture offers numerous options for almost every electrical and optical component, including a long list of field-installable accessories.

rSBOR/SBOR – Fixture Mount Sensor (see www.sensorswitch.com for additional information)

- 360° coverage
- On/Off dim
- Photocell optional
- IP66 rated
- Photocell and 0-10VDC dimming options.

Fixture sensor nomenclature	RSBOR/SBOR sensor nomenclature
For shortest lead times use one of the following SBOR configurations	
NLTAIR2 RSBOR10	RSBOR 10 EB4 WH G2
MSI10NWL	SBOR 10 OEX EB4 WH
MSI102L3VWL	SBOR 10 OEX D EB4 WH 3V
MSI10NWL DSCNWL	SBOR 10 OEX P EB4 WH

© 2015-2022 Acuity Brands Lighting, Inc. All rights reserved.