Catalog Number
Notes
Type

Contractor Select™

WAFER NEW CONSTRUCTION PANS

UNIVERSAL NEW CONSTRUCTION MOUNTING PAN

The Juno Wafer WF8643 PAN is a universal new construction pre-mounting plate for the 3, 4, 6, and 8 inch LED ultra-thin downlights. The new construction plate can be installed in either wood joist or suspended T-Grid ceilings up to 1 ½ ceiling thickness.

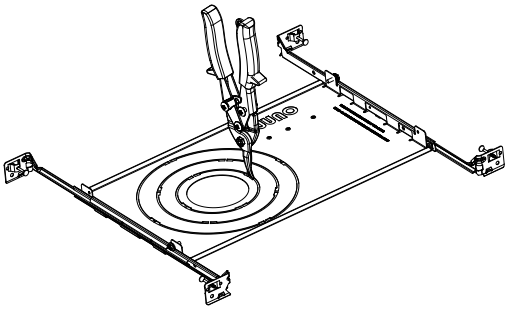

Catalog Number	UPC	Description	Pallet qty.
WF8643 PAN R6	196182740572	Universal New Construction Wafer Pan, Retail Pack of 6	240

Specifications

WARRANTY:

1-year limited warranty. This is the only warranty provided and no other statements in this specification sheet create any warranty of any kind. All other express and implied warranties are disclaimed. Complete warranty terms located at: www.acuitybrands.com/support/warranty/terms-and-conditions

Note: Actual performance may differ as a result of end-user environment and application. Specifications subject to change without notice.

Dimensions

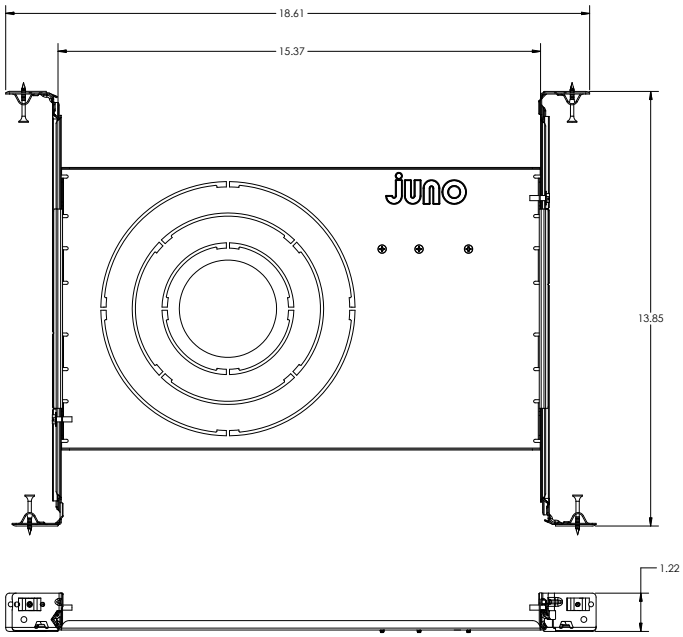

Accessories: Order as separate catalog number.

Series	
WF4 PAN R12	4" new construction pan, retail pack of 12
WF6 PAN R12	6" new construction pan, retail pack of 12
WF4GR MW JZ	4" round oversized trim ring
WF6GR MW JZ	6" round oversized trim ring
WFJB U	Remodel Joist Bar
WFEXC6 SW3PIN FT4	3-Pin 6ft Cable
WFEXC10 SW3PIN FT4	3-Pin 10ft Cable
WFEXC20 SW3PIN FT4	3-Pin 20ft Cable

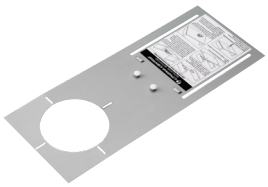

WF4 PAN
4" New Construction Pan

WF6 PAN
6" New Construction Pan

Remodel Joist Bar

WFEXCx
3-PIn Extension Cable

© 2022-2023 Acuity Brands Lighting, Inc. All rights reserved. Rev. 08/24/23