TFX4 LED
Floodlights

Catalog Number

Notes

Type

Hit the Tab key or mouse over the page to see all interactive elements.

TFX4 with Slipfitter Mount

TFX4 with Yoke Mount

Introduction

The TFX4 LED flood luminaire is a cost-effective, energy-efficient, long-life solution for replacing metal halide or HPS floodlights. Delivering 41,700 lumens, the TFX4 can replace up to 1000W metal halide while saving 74% in energy costs. Reliable IP66 construction and excellent LED lumen maintenance will ensure a long service life; avoiding the multiple lamp changes of the metal halide luminaires they replace.

The TFX4 is available with integral slip fitter and yoke mounting options. The slip fitter can be used for installation on 2 3/8" outer diameter tenons.

Ordering Information

Luminaire	Color Temperature	Lumen Output	Input Power	Efficacy (Lumens per Watt)	Finish	Voltage	Mounting	Catalog Number	CI Code	UPC Code
TFX4	4000K	41,000	296W	139	Bronze	MVOLT (120V - 277V)	Slipfitter	TFX4 LED 40K MVOLT IS DDBXD	*2552MM	193047670302
							Yoke	TFX4 LED 40K MVOLT YK DDBXD	*2552MN	193047670326
		41,700	286W	146		HVOLT (347V - 480V)	Slipfitter	TFX4 LED 40K HVOLT IS DDBXD	*2552MR	193047670333
							Yoke	TFX4 LED 40K HVOLT YK DDBXD	*2552MS	193047670340
	5000K	41,000	296W	139		MVOLT (120V - 277V)	Slipfitter	TFX4 LED 50K MVOLT IS DDBXD	*25826T	193048047493
							Yoke	TFX4 LED 50K MVOLT YK DDBXD	*25826X	193048047561
		41,700	286W	146		HVOLT (347V - 480V)	Slipfitter	TFX4 LED 50K HVOLT IS DDBXD	*25827C	193048047547
							Yoke	TFX4 LED 50K HVOLT YK DDBXD	*25827F	193048047578

FEATURES & SPECIFICATIONS

INTENDED USE
The TFX4 LED floodlight is designed to provide a cost effective, energy-efficient solution for the one-for-one replacement of existing metal halide or high pressure sodium lighting. The TFX4 is ideal for replacing up to 1000W HID luminaires in parking lots, signage, yards, and other floodlighting applications. TFX luminaires deliver a uniform, wide flood distribution.

CONSTRUCTION
The TFX4 LED floodlight features a die-cast aluminum main body with optimal thermal management that both enhances LED efficacy and extends component life. The light engines and housing are IP66 rated, and sealed against moisture or environmental contaminants.

ELECTRICAL
Light engine(s) configurations consist of high-efficacy LEDs and LED lumen maintenance is L84/100,000 hours. Color temperature (CCT) options of 4000K and 5000K with minimum CRI of 70. TFX LED luminaires use electronic drivers that are 0-10V, capable of continuous dimming and ensure system power factor >90% and THD <20%. All luminaires have 10kV surge protection.

INSTALLATION
The integral slip fitter option (IS) mates with standard 2 3/8" tenons for pole-top mounting. The yoke mount (YK) option allows mounting to solid surfaces and has a 30" SO cord. TFX luminaires are suitable for aiming in any orientation. TFX is rated for installation on ground. Can be tilted from 0° horizontal facing downwards, up to 180° horizontal facing upwards.

LISTINGS
UL Certified to meet U.S. and Canadian standards. Suitable for wet locations. IP66 Rated. DesignLights Consortium® (DLC) Premium qualified product. Please check the DLC Qualified Products List at www.designlights.org/QPL to confirm.

WARRANTY
5-year limited warranty. This is the only warranty provided and no other statements in this specification sheet create any warranty of any kind. All other express and implied warranties are disclaimed. Complete warranty terms located at: www.acuitybrands.com/support/customer-support/terms-and-conditions

Note: Actual performance may differ as a result of end-user environment and application. All values are design or typical values, measured under laboratory conditions at 25 °C. Specifications subject to change without notice.

© 2019-2023 Acuity Brands Lighting, Inc. All rights reserved.

Pole/Mounting Information

Accessories including bullhorns, cross arms and other adpaters are available under the accessories tab at Lithonia's Outdoor Poles and Arms product page.Click here to visit Accessories.

TFX4 - Luminaire EPA

*Includes luminaire and integral mounting arm. Other tenons, arms, brackets or other accessories are not included in this EPA data.

TFX4 LED	
Angle of Tilt	EPA (ft2)
0°	1.18
10°	1.38
20°	1.68
30°	1.94
40°	2.14
50°	2.37
60°	2.46
70°	2.52
80°	2.57
90°	2.58

Photometric Diagrams

To see complete photometric reports or download .ies files for this product, visit Lithonia Lighting's.

Distances are in units of mounting height (25').

LEGEND

- 0.1 fc
- 0.2 fc
- 0.5 fc
- 1.0 fc

Luminaires tilted at 45°

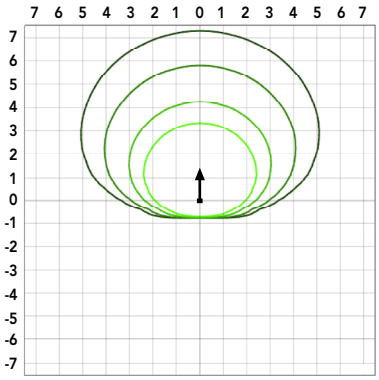

Performance Data

Lumen Ambient Temperature (LAT) Multipliers

Use these factors to determine relative lumen output for average ambient temperatures from 0-50°C (32-122°F).

Ambient	Ambient	Lumen Multiplier
0°C	32°F	1.05
5°C	41°F	1.04
10°C	50°F	1.03
15°C	59°F	1.02
20°C	68°F	1.01
25°C	77°F	1.00
30°C	86°F	0.99
35°C	95°F	0.98
40°C	104°F	0.97
45°C	113°F	0.96
50°C	122°F	0.95

Electrical and Lumen Maintenance Data

Electrical Load (Amperage)

Luminaire	Input Power (W)	120V	208V	240V	277V	347V	480V
TFX4 LED (MVOLT) Input Current (Amperes)	286W	2.38	1.38	1.19	1.03		
TFX4 LED (HVOLT) Input Current (Amperes)	296W					0.85	0.62

Projected Lumen Maintenance

Data references the extrapolated performance projections in a 25°C ambient, based on 6,000 hours of LED testing (tested per IESNA LM-80-08 and projected per IESNA TM-21-11).

To calculate LLF, use the lumen maintenance factor that corresponds to the desired number of operating hours below. For other lumen maintenance values, contact factory.

Operating Hours	50,000	75,000	100,000
Lumen Maintenance Factor	>0.91	>0.88	>0.84

Values calculated according to IESNA TM-21-11 methodology and valid up to 40°C.

© 2019-2023 Acuity Brands Lighting, Inc. All rights reserved.

Product Dimensions

Weight: 40lbs (18.2kg)

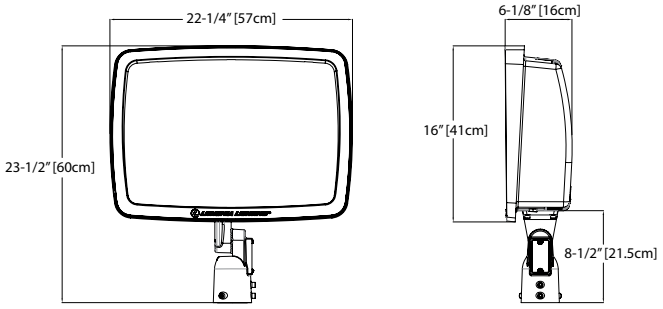

TFX4 with Slipfitter Mount

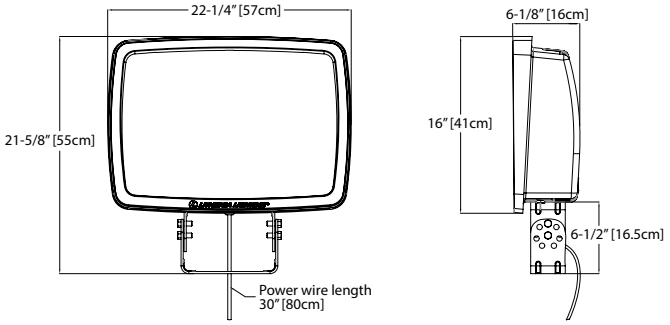

TFX4 with Yoke Mount

YK - Yoke Mounting:

Mount fixture to the desired bracketry with one 5/8" or two 1/2" fasteners, lock washer, and nut (not provided). Tighten to 30ft-lbs. See template of yoke bracket hole pattern below.

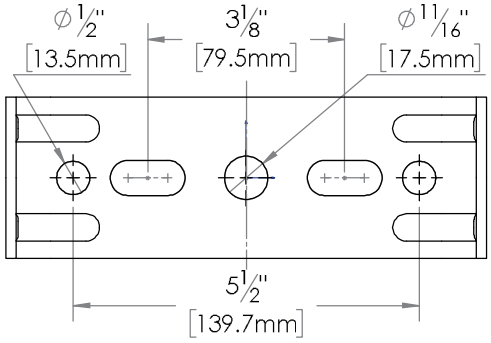

© 2019-2023 Acuity Brands Lighting, Inc. All rights reserved.