JUNO

Quick Connect LED Downlight Series

6" Quick Connect LED Housing for use with LED Retrofit Trims

New Construction

Project:	
Fixture Type:	
Location:	
Contact/Phone:	

QC6 Series

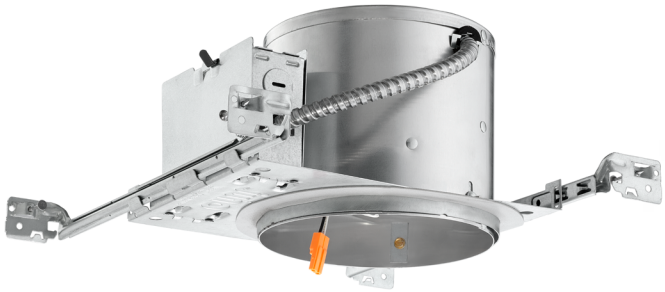

c UL us LISTED

TITLE 24 PART 6

AIR-LOC

Dimensions

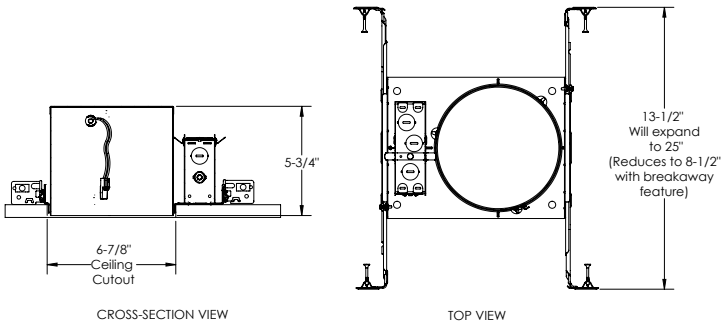

Product Features

6" quick connect new construction housing features non-screw base 120V plug-in orange connector for simple installation of retrofit LED trim modules for an economical LED downlight solution.

The IC-rated shallow housing can fit in a 2 x 6 construction and can be completely covered with insulation. The fixture is Air-Loc® sealed to stop infiltration and exfiltration of air, reducing heating and cooling costs.

Easy installation and servicability

- Low profile LED downlight less than 6" in height
- Easy to handle compact size weighing less than 3lbs
- Installs into wood joists with Real Nail® 3 bar hangers

Other models available:

4" New Construction: QC4 Series

5" New Construction: QC5 Series

4" Remodel: QC4R Series

5" Remodel: QC5R Series

6" Remodel: QC6R Series

Applications

- Ideal for use in a breadth of residential and light commercial applications including single and multi-family construction, office spaces and hospitality
- Shallow plenum, new construction
- IC rated - for direct contact with insulation

Performance

When paired with LED retrofit trims:

Delivered Lumens	up to 1200L
LED Color Temperature	27K - 50K options
CRI	90+
Voltage	Dedicated 120V
Dimming	Forward/Reverse Phase

For use with compatible retrofit LED trims:

Downlight

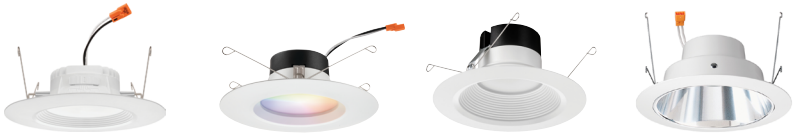

Adjustable

Quick Connect LED Downlight Series

6" Quick Connect LED Housing for use with LED Retrofit Trims New Construction

ORDERING INFORMATION

Example: QC6

Series		Options					
QC6	Quick Connect 6" LED new construction downlight	**Bar Hanger**		**Gasket**		**Connector**		**Packaging**	
		S	Smaller footprint bar hanger (Real Nail 2) [1]	**G**	Air-loc gasket on plaster frame	**W**	Push-in electrical connectors	**J6**	Job pack of 6 [2]

J6 (job pack) Breakout Examples:

Example 1: Ordered in multiples of 6

Ordered Line: Qty: 12 QC6 W G J6

* Will receive 2 cartons with 6 fixtures each (traditional Juno packaging for housings)

Example 2: Ordered in other quantities

Ordered Line: Qty: 15 QC6 W G

Breakout Line 1: Qty: 12 QC6 W G J6

* Will receive 2 cartons with 6 fixtures each (traditional Juno packaging style)

Breakout Line 2: Qty: 3 QC6 W G

* Will receive 3 cartons with a single fixture each inside

Note: if quantity ordered is less than 6, the breakout line will default to unit packs.

Notes

1 Must specify W and G when ordering S option.

2 Recommend ordering J6 in multiples of 6 for optimized packaging with fewer cartons shipped to the customer. See ordering example below.

Accessories: Order as separate catalog number.

QCHSGWHIP R10	Socket whip for temporary lighting retail pack of 10

QC6 - Compatible Downlight LED Trim Modules

RetroBasics Downlight Switchable

RetroBasics Switchable Adjustable

RetroBasics Smart Downlight

RetroBasics Smart Adjustable

E Series Downlight Switchable

6RLD Static Downlight

J6RL Static Downlight

6RLA Static Adjustable

6G1 Static Adjustable

 ©2022-2023 Acuity Brands Lighting, Inc.

Quick Connect LED Downlight Series

6" Quick Connect LED Housing for use with LED Retrofit Trims
New Construction

Specifications/Electrical Data

Housing
Designed for use in IC (insulated ceiling) or non-IC construction • Aluminum housing sealed for Air-Loc® compliance, when ordering G (gasket) option • Housing is vertically adjustable to accommodate up to a 1" ceiling thickness

Electrical Connections
Features non-screw base 120V plug-in orange connector • Compatible with retrofit LED trim modules

Junction Box
Pre-wired junction box provided with (5) ½" and (1) ¾" knockouts, (4) knockouts for 12/2 or 14/2 NM cable and ground wire • UL listed and cUL listed for through-branch wiring, maximum of 8 No. 12 AWG 90°C branch circuit conductors (4 in, 4 out) • Junction box provided with removable access plates • Knock-outs equipped with pryout slots • Optional push-in electrical connectors for fast, secure wiring when ordering W (push in connector) option

Mounting Frame
22-gauge die-formed galvanized steel mounting frame • Rough-in section (junction box, mounting frame, housing and bar hangers) fully assembled for ease of installation • Optional pre-installed Air-Loc® gasket applied to frame, when ordering G (gasket) option

Real Nail 3 Bar Hangers
Telescoping Real Nail® 3 system covered under US Patent D552,969 permits quick placement of housing anywhere within 24" O.C. joists or suspended ceilings • Integral T-bar notch and clip secures housing in suspended ceiling grid – no accessory clips required • 24" expansion stop allows quick placement of fixture in standard grid spacing • Bars scored in two locations for fast, clean breaking, allowing housing installation in tight applications • Bars captive to mounting frame • Edge-mounted for extra strength • Reversible bar hangers may be installed either parallel to the junction box or repositioned 90° to be perpendicular to the junction box • Captive bugle-headed ring shank nail for quick one-step installation and easy removal with claw hammer for fixture relocation • Quick-Loc slot (location identified on the mounting frame) and oversized locking set screw lock fixture in position • Bar hanger foot contoured to align to bottom of construction joist • Alternate mounting holes included

Optional Real Nail 2 Bar
Hanger when ordering S (strapping) option that provides smaller bar hanger foot designed to install directly on strapping construction material. This option requires G2405 accessory clips for suspended ceiling installation

Certifications
Can be used to comply with 2019 Title 24 Part 6 JA8 high efficacy LED light source requirements • UL listed for U.S. and Canada through-branch wiring, damp locations • When used with E, RLD, J6RL, RetroBasics and specific models of Juno AI series, suitable for wet locations • UL and cUL

Testing: All reports are based on published industry procedures; field performance may differ from laboratory performance.

WARRANTY — 1-year limited warranty. This is the only warranty provided and no other statements in this specification sheet create any warranty of any kind. All other express and implied warranties are disclaimed. Complete warranty terms located at: www.acuitybrands.com/support/warranty/terms-and-conditions

Note: Actual performance may differ as a result of end-user environment and application.

All values are design or typical values, measured under laboratory conditions at 25 °C.

Specifications subject to change without notice.

 ©2022-2023 Acuity Brands Lighting, Inc.