LITHONIA LIGHTING®

Catalog Number	
Notes	
Type	

LBR8

8" Open and Wallwash LED Retrofit/Remodel Downlight

Retrofit | Remodel

FEATURES & SPECIFICATIONS

INTENDED USE — Typical applications include corridors, lobbies, conference rooms and private offices.

CONSTRUCTION — Retrofit, remodel, and new construction mounting types. See table for compatible ceiling openings and thickness range.

Optional goof rings available for additional overlap trim coverage.

1/2"-1-1/2" ceiling thickness

25° ambient temperature

IC rated up to 1000lm

OPTICS — LEDs are binned to a 3-step Mac Adam Ellipse. 55° cutoff

New construction frame accessories approved for 8 (4 in/4 out) No. 12 AWG conductors rated for 90°C through wiring.

80CRI standard (90CRI optional)

UGR — UGR is zero for fixtures aimed at nadir with a cut-off equal to or less than 60deg, per CIE 117-1996 Discomfort Glare in Interior Lighting. UGR FAQ

ELECTRICAL — Adjustable lumen output with four module options. Fixed lumen options also available. MVOLT 120/277V 50/60Hz driver (0-10V & 120V Phase Dimming to 10% or 1% min dimming level) FCC CFR Title 47 Part 15 Class A for 277V. FCC CFR Title 47 Part 15 Class B for 120V.

LUMEN MAINTENANCE — L80 at 60,000 hours

LISTINGS — Certified to US and Canadian safety standards. Title 24 compliant (90CRI, up to 1000lm) Damp location standard (Wet Location (WL) optional, requires covered ceiling). Some configurations are ENERGY STAR® certified, please visit www.energystar.gov for specific products. TAA compliant. UFC (3-530-01) specification compliant for power factor and THD. GSA P100 6.2.4 compliant for power quality at full output; compliant up to 2000lm at fully dimmed output. Drivers are ROHS compliant

WARRANTY — 5-year limited warranty. This is the only warranty provided and no other statements in this specification sheet create any warranty of any kind. All other express and implied warranties are disclaimed. Complete warranty terms located at: www.acuitybrands.com/support/warranty/terms-and-conditions

Note: Actual performance may differ as a result of end-user environment and application.
All values are design or typical values, measured under laboratory conditions at 25 °C.
Specifications subject to change without notice.

Performance Data

LBR8 AR LSS MWD		80CRI							
Lumen Output	Wattage	30K/80CRI		35K/80CRI		40K/80CRI		50K/80CRI	
		Delivered Lumens	LPW	Delivered Lumens	LPW	Delivered Lumens	LPW	Delivered Lumens	LPW
AL01 (500LM)	6	551	96	564	97	577	99	595	101
AL01 (750LM)	9	872	98	893	100	914	102	942	104
AL01 (1000LM)	13	1225	95	1253	96	1283	98	1323	101
AL02 (1000LM)	13	1298	105	1328	106	1360	108	1402	111
AL02 (1500LM)	19	1895	101	1939	103	1985	105	2047	107
AL02 (2000LM)	25	2387	96	2442	98	2500	99	2578	102
AL03 (2000LM)	25	2456	99	2513	101	2572	103	2652	105
AL03 (2500LM)	32	2965	94	3034	96	3106	98	3202	100
AL03 (3000LM)	38	3367	90	3445	91	3527	93	3636	95
AL04 (4000LM)	39	4008	104	4090	106	4172	108	4213	109
AL04 (4500LM)	44	4424	101	4514	103	4604	105	4649	106
AL04 (5000LM)	49	4811	98	4909	100	5007	102	5056	103

LBR8 MS MWD		80CRI							
Lumen Output	Wattage	30K/80CRI		35K/80CRI		40K/80CRI		50K/80CRI	
		Delivered Lumens	LPW	Delivered Lumens	LPW	Delivered Lumens	LPW	Delivered Lumens	LPW
AL01 (500LM)	6	463	80	474	82	485	84	500	86
AL01 (750LM)	9	733	82	750	84	767	86	791	88
AL01 (1000LM)	13	1029	79	1053	81	1078	83	1111	86
AL02 (1000LM)	13	1091	87	1116	89	1142	91	1178	94
AL02 (1500LM)	19	1592	84	1629	86	1667	88	1719	91
AL02 (2000LM)	25	2005	80	2052	82	2100	84	2165	87
AL03 (2000LM)	25	2063	83	2111	85	2161	87	2228	89
AL03 (2500LM)	32	2490	79	2548	81	2609	83	2690	85
AL03 (3000LM)	38	2828	75	2894	77	2963	78	3055	81
AL04 (4000LM)	39	3367	86	3436	88	3504	90	3539	91
AL04 (4500LM)	44	3716	84	3792	86	3867	88	3905	89
AL04 (5000LM)	49	4041	82	4124	84	4206	86	4247	87

- Tested in accordance with IESNA LM-79-08. u8226
- Tested to current IES and NEMA standards under stabilized laboratory conditions.
- CRI: 80 typical

battery pack

Module ordering

ORDERING INFORMATION Lead times will vary depending on options selected. Consult with your sales representative. **Example:** LBR8 AL02 SWW1 AR LSS MWD MVOLT UGZ 90CRI

Series		Lumens ‡				Color temperature ‡		Reflector Color		Reflector Flange ‡		Reflector Finish	
LBR8	8" Retrofit	**Adjustable Lumen Output**		**Fixed Lumen Output**		**Switchable CCT**		AR	Clear	(blank)	Self-flanged	LSS	Semi-specular
LBR8WW ‡	8" Retrofit Wallwash	AL01	500/750/1000lm	05LM	500lm	SWW1	3000K-3500K-4000K-5000K	BR ‡	Black painted	TRW	White painted flange		
		AL02	1000/1500/2000lm	07LM	750lm	**Fixed CCT**		MS ‡	Metallic Silver	TRBL	Black painted flange		
		AL03	2000/2500/3000lm	10LM	1000lm	27K	2700K	WR ‡	White painted	FCPC	Custom painted flange only		
		AL04	4000/4500/5000lm	15LM	1500lm	30K	3000K	TCPC ‡	Custom painted trim	FRALTBD	RAL painted flange only		
				20LM	2000lm	35K	3500K	TRALTBD ‡	RAL painted trim				
				25LM	2500lm	40K	4000K						
				30LM	3000lm	50K	5000K						
				40LM	4000lm								
				45LM	4500lm								
				50LM	5000lm								

Distribution		Voltage	Driver		Emergency ‡		Control Input ‡	
MWD	Medium wide (1.0 s/mh)	MVOLT	UGZ	Universal dimming to 10% 0-10V; line voltage dimming (120V)	(blank)	No Emergency Needed	(blank)	No Control Input Needed
WD	Wide (1.2s/mh)	120	UGZ1	Universal dimming to 1% 0-10V; line voltage dimming (120V)	ELR	Battery pack (10W constant power) Non-T20 Compliant remote test switch	JOT	Wireless room control with "Just One Touch" pairing
WW ‡	Wallwash	277	DALI ‡	DALI dimming to 1%	ETS	Iota Emergency Transfer System	NPS80EZ	nLight® network power/relay pack with 0-10V dimming
		347	D10	Minimum dimming 10% driver for use with JOT	E10WCP	Battery pack (10W constant power) Non-T20 Compliant integral test switch	NPS80EZER	nLight® network power/relay pack with 0-10V dimming; ER controls fixtures on emergency circuit.
			D1	Minimum dimming 1% driver for use with JOT	E10WCPR	Battery pack (10W constant power) T20 Compliant remote test switch	NLTAIR2	nLight® Air enabled
					E10WRSTAR	Emergency battery pack, 10W with remote test switch and Iota STAR technology	NLTAIRER2	nLight® AIR Dimming Pack Wireless Controls. Controls fixtures on emergency circuit
							NLTAIREM2	nLight® AIR Dimming Pack Wireless Controls. UL924 Emergency Operation, via power interrupt detection.

Options	
90CRI	High CRI (90+)
AT ‡	Airtight
EC1 ‡	Extended Conduit (18")
EC6 ‡	Extended Conduit (6ft)
WL ‡	Wet Location (IP55)
QDS ‡	Quick disconnect plugs
CP ‡	Chicago Plenum

NOTE: ‡ indicates option value has ordering restrictions. Please reference the Option Value Ordering Restictions chart below.

‡ Option Value Ordering Restrictions

Options	Restriction
Adjustable Lumens/CCT	Adjustable Lumen Output and Switchable CCT must be specified together (for example: AL01 SWW1).
Fixed Lumens/CCT	Fixed Lumen Output and Fixed CCT must be specified together (for example: 10LM 30K).
AT	Standard for CP and IP55, not availabe with WW.
E10WCPR	Not available EC1, EC6, QDS, CP, 347V, NPS80EZ ER, NLTAIRER2, NLTAIREM2, AL03 & AL04 w/DALI, OR 2000-4500 lumens w/JOT.
E10WCP	Not available with EC1, EC6, AT, QDS, CP, 347V, NPS80EZ ER, NLTAIRER2, NLTAIREM2, WL, AL03 & AL04 w/DALI, OR 2000-4500 lumens w/JOT.
E10WRSTAR	Not available with wet location, EC1, EC6, QDS, CP, 347V, NPS80EZ ER, NLTAIRER2, NLTAIREM2, AL03 & AL04 w/DALI, OR 2000-4500 lumens w/JOT. Top access installation or 17.5" plenum clearance required for roomside installation. Not available with integral test switch
ELR	Not available EC1, EC6, QDS, CP, 347V, NPS80EZ ER, NLTAIRER2, NLTAIREM2, AL03 & AL04 w/DALI, OR 2000-4500 lumens w/JOT.
EC1, EC6	Not Available with CP,QDS, ELR, E10WCP, or E10WCPR.
WL	Not available with WW, All CP is wet location, except WW (Damp). IP55 rated.
QDS	Must be specified for use with LBR_PFWQDS. Not available with 347V, CP, ELR, E10WCP, E10WCPR.
JOT	Not availabe with CP, nLight options, UGZ, or DALI drivers. Max 4500 lumens. Fixed lumens and CCT only. Not available with 2000-4500lm in conjunction with batterypack.
NPS80EZ	Not available with CP, QDS, DALI, D1, OR D10 drivers. 120V OR 277V only. Not available with 347V.
NPS80EZER	Not available with CP, QDS, ELR, E10WCP, E10WCPR, DALI, D1, OR D10 drivers. 120V OR 277V only. Not available with 347V.
NLTAIR2	Not available with CP, QDS, DALI, D1, OR D10 drivers. See UL 924 Sequence of Operation table. Non-emergency luminaires with this option can be used as a normal power sensing device for nLight AIR devices and luminaires with EM emergency options.
NLTAIRER2	Not available with CP, QDS, ELR, E10WCP, E10WCPR, DALI, D1, OR D10 drivers. Not available with 347V.
NLTAIREM2	Not available with CP, QDS, ELR, E10WCP, E10WCPR, DALI, D1, OR D10 drivers. See UL 924 Sequence of Operation table.
CP	Must be specified for use with LBR_PFWCP. Not available with, QDS, EC1, EC6, ELR, E10WCP, E10WCPR, 347V, JOT, NPS80EZ, NPS80EZ ER, NLTAIR2, NLTAIRER2, NLTAIREM2, D1, OR D10 drivers.
ETS	Not available with, QDS, ELR, E10WCP, E10WCPR, 347V, JOT, NPS80EZ, NPS80EZ ER, NLTAIR2, NLTAIRER2, NLTAIREM2, DALI, D1, OR D10 driver.
DALI	Not available with fixed lumens or CCT. Max 4500 lumens.
WW	Not available with WL, EL and E10WCP. Must be ordered with LBR8WW series.
TRW, TRBL	Available with MS and AR reflectors only.
MS, WR, BR	Not available with LSS reflector finish.
TRALTBD, FRALTBD	RALTBD for pricing only. Replace with applicable RAL number and finish when ready to order. See the RAL BROCHURE for available color options.
TCPC, FCPC	CPC options for pricing only. Custom color chip needs to be sent in to your Customer Resolution specialist before order can be processed. Click HERE for more details

© 2020-2023 Acuity Brands Lighting, Inc. All rights reserved. Rev. 03/16/23

Accessories: *Order as separate catalog number. Shipped separately.*	
LBRGR910	Goof ring 9-3/4" to 10-3/4" for LBR8
LBRGR910CP	Chicago Plenum Goof ring 9-3/4" to 10-3/4" for LBR8
LBR8AR LSS TRIM	8" clear, semi-specular reflector
LBR8** TRIM	8" reflector (** specify MS, WR, BR)
LBR8AR LSS WW TRIM	8" clear, semi-specular wallwash
LBR8** WW TRIM	8" wallwash (** specify MS, WR, BR)
LDN8RVRGIN IFB	Install-from-below rough-in frame
LBR46810HB FPAN U	Mounting plate 4"-10" unit pack
LBR46810HB FPAN J10	Mounting plate 4"-10" 10-pack
LBR SDT 347V 75W ASM	Field installed 347V Step-down transformer
SCA8	Sloped Ceiling Adapter. Degree of slope must be specified (5D, 10D, 15D, 20D, 25D, 30D). Ex: SCA8 10D.

Goof rings must specify reflector color
Example: LBRGR910 AR
WR = white, BR = black, AR = Clear

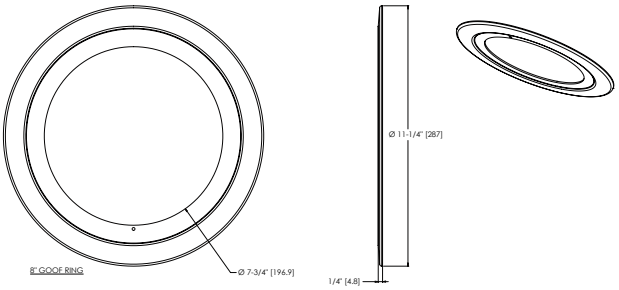

Module	Mounting Frame Accessory	Compatible Fixture Options
LBR8	LBR8PF	QDS, EC1, EC6,
	LBR8PFW	Base fixture only
	LBR8PFW EM	ELR, E10WCPR, E10WCP, E10WRSTAR
	LBR8PFWQDS	QDS fixture only
LBR8WW	LBR8PF	QDS, EC1, EC6,
	LBR8PFW	Base fixture only
	LBR8PFW EM	ELR, E10WCPR, E10WRSTAR
	LBR8PFWQDS	QDS fixture only

Emergency Battery Pack Options - Field Installable

Battery Model Number	Wattage	Runtime (Minutes)	Lumen Output* @ 120 Lumens/Watt	Other
ILB CP07 2H A	7W	120	840	Storm Shelter / 2 Hour Runtime
ILB CP10 A	10W	90	1200	
ILBLP CP10 HE SD A+	10W	90	1200	Title 20, Self Diagnostic
ILBLP CP15 HE SD A+	15W	90	1800	Title 20, Self Diagnostic
ILB CP20 HE A	20W	90	2400	Title 20
ILB CP20 HE SD A	20W	90	2400	Title 20, Self Diagnostic
ILBHI CP10 HE SD A+	10W	90	1200	347-480V AC Input, Title 20, Self Diagnostic
ILBHI CP15 HE SD A+	15W	90	1800	347-480V AC Input, Title 20, Self Diagnostic

All the above are UL Listed products that are certified for field install external/remote to the fixture.
*Minimum delivered lumen output to assist in product selection for increased fixture mounting height.
The CP10 delivered emergency illumination outperforms legacy 1400 lumen fluorescent emergency ballast.
Please contact us at techsupport@iotaengineering.com for any Emergency Battery related questions.

© 2020-2023 Acuity Brands Lighting, Inc. All rights reserved. Rev. 03/16/23

PLENUM DEPTH TABLE				
Aperture Size/Output	Plenum Depth*	IC	Non-IC	Non-IC Marked Spacing
LBR8 500-1000 Lumen	5.81	X		
LBR8 1000-2000 Lumen	5.81		X	
LBR8 2000-3000 Lumen	-			24x24x9
LBR8 4000-5000 Lumen	-			24x24x9

*Above unfinished 1/2" ceiling plane

CEILING COVERAGE TABLE								
Series		Aperture	Trim Flange OD	Min ceiling opening	Ceiling Thickness	Max ceiling opening	Max Ceiling Opening with Goof Ring	Overall Goof Ring OD
LBR8	ROUND	7-1/6"	9-3/16"	7-3/4"	1/2"	8-7/8"	9-1/4"	11-1/4"
LBR8					1-1/2"		9-5/8"	

* All dimensions are inches (millimeters) unless otherwise noted.

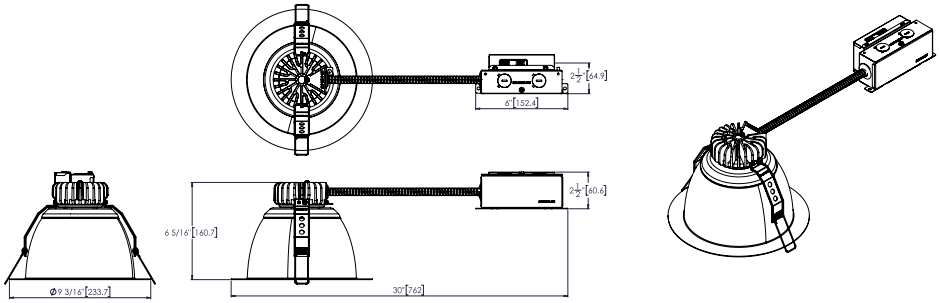

LBR8 SWW1 AL0x xx xxx MVOLT UGZ

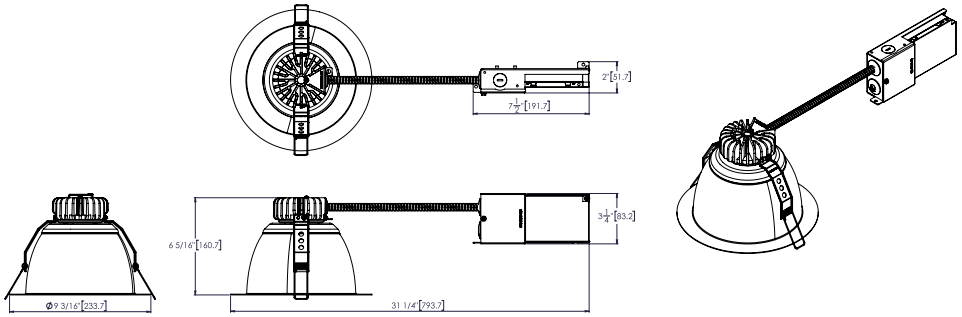

LBR8 SWW1 AL03 xx xxx MVOLT DALI

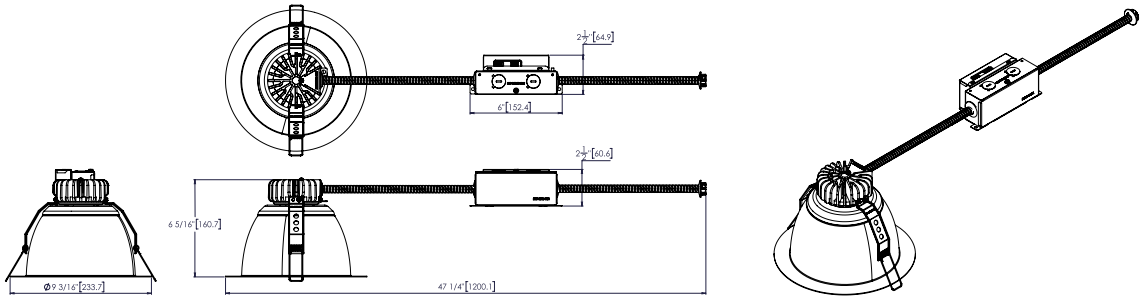

LBR8 SWW1 AL0x xx xxx MVOLT UGZ EC1

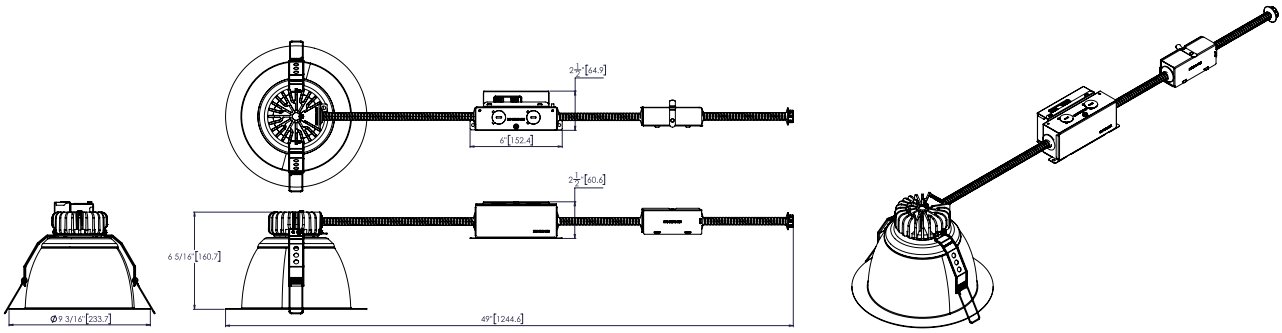

LBR8 SWW1 AL0x xx xxx MVOLT UGZ QDS

© 2020-2023 Acuity Brands Lighting, Inc. All rights reserved. Rev. 03/16/23

LBR8

* All dimensions are inches (millimeters) unless otherwise noted.

LBR8PFWCP

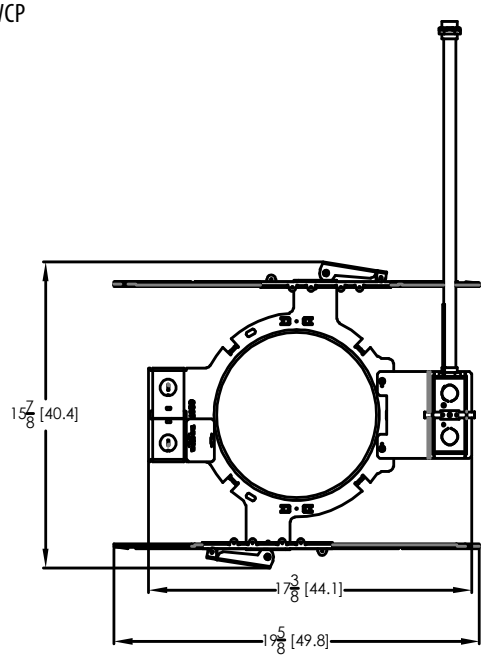

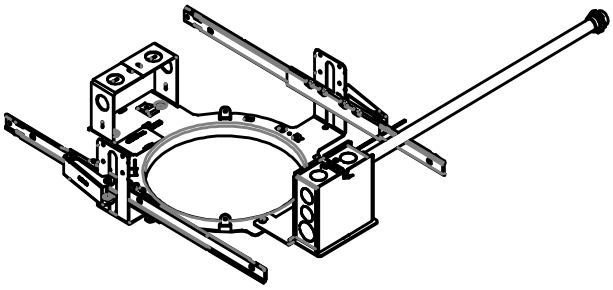

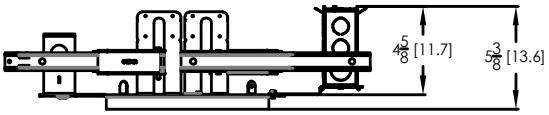

LBR8 SWW1 ALOx MVOLT UGZ CP

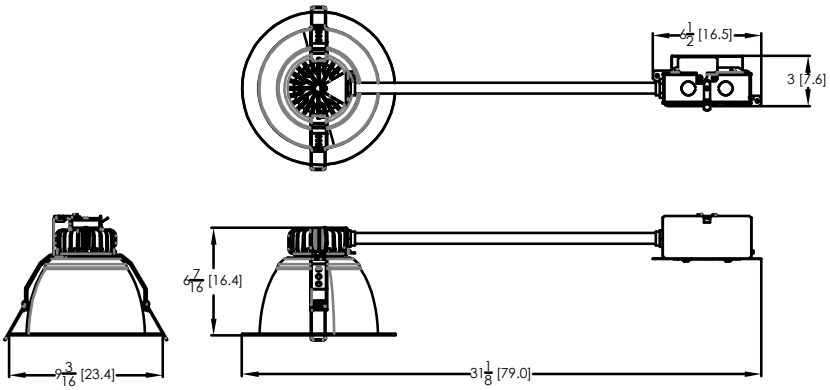

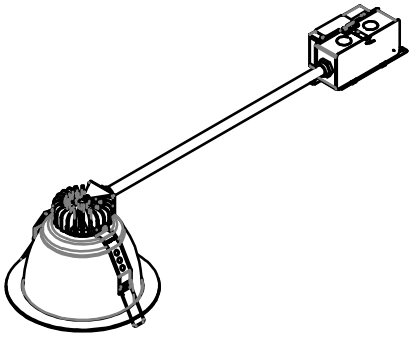

© 2020-2023 Acuity Brands Lighting, Inc. All rights reserved.

LBR8

* All dimensions are inches (millimeters) unless otherwise noted.

LBR8 ALOx SWW1 xx xxx 347 UGZ

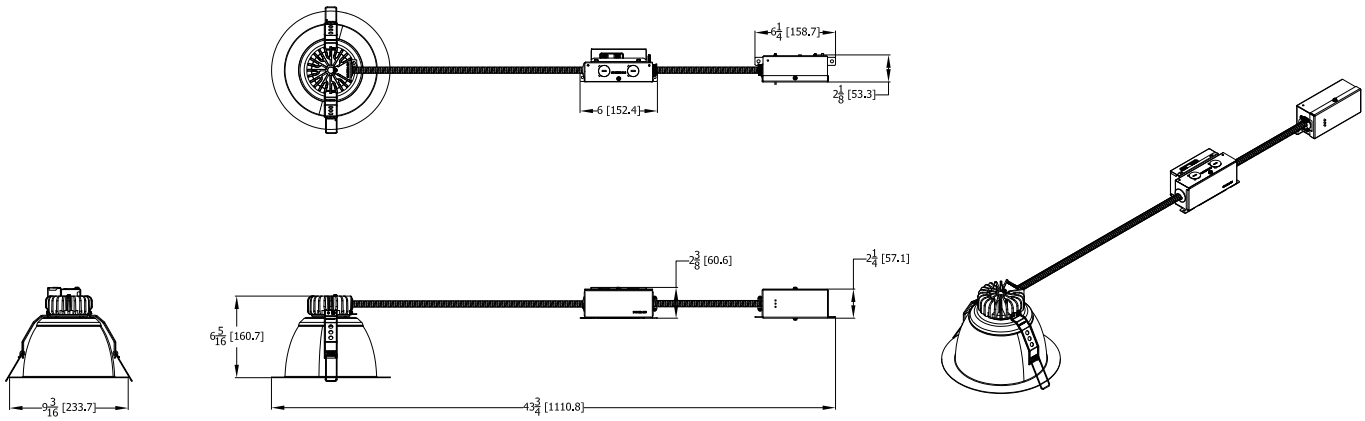

LBRx nLIGHT

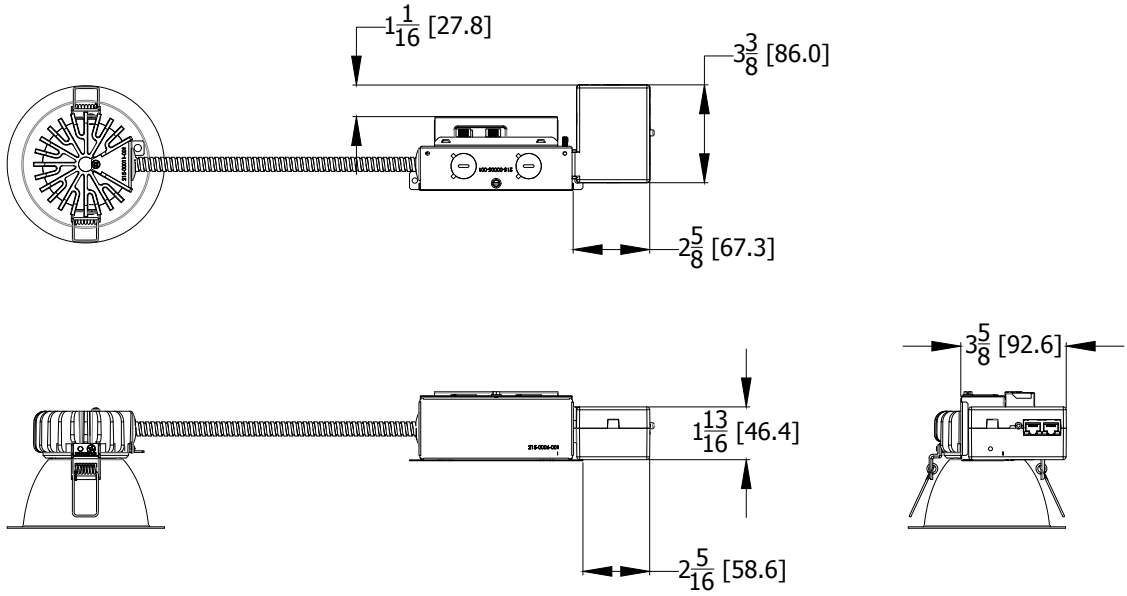

© 2020-2023 Acuity Brands Lighting, Inc. All rights reserved.

PHOTOMETRY

Distribution Curve	Distribution Data	Output Data	Illuminance Data at 30" Above Floor for a Single Luminaire

LBR8 SWW1 ALO2 AR LSS MWD MVOLT UGZ, Input Watts: 18.1, Delivered Lumens: 1883, LPW: 104.0, S/MH: 1.05, Test No: 20-518-04

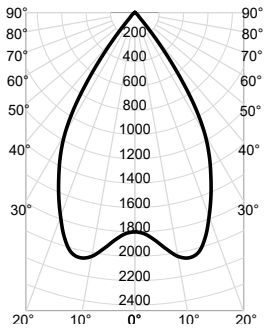

CP Summary

	0°
0°	1,799
5°	1,874
15°	2,032
25°	1,476
35°	644
45°	50
55°	16
65°	3
75°	1
85°	0
90°	0

Zonal Lumen Summary

Zone	Lumens	% Fixture
0° - 30°	1,416	75%
0° - 40°	1,812	96%
0° - 60°	1,878	100%
0° - 90°	1,883	100%
90° - 180°	0	0%
0° - 180°	1,883	100%

Cone of Light

Mounting Height	Initial FC Center Beam	Beam Diameter
6.0	50.0	7.3
8.0	28.1	9.7
10.0	18.0	12.2
12.0	12.5	14.6
14.0	9.2	17.0

Beam Angle: 62.6°
Field Angle: 79.4°

Luminance (cd/sq.m)

	Average Luminance
0°	68,479
45°	2,703
55°	1,062
65°	288
75°	191
85°	131

LBR8WW SWW1 ALO2 AR LSS WW, Input Watts: 18.7, Delivered Lumens: 1929, LPW: 103.2, S/MH: 0.88, Test No: 20-518-A2

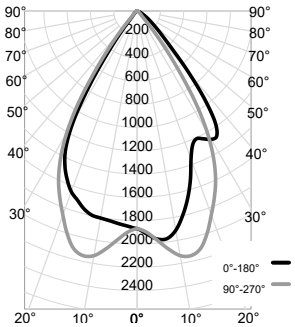

CP Summary

	0°	90°
0°	1,869	1,869
5°	1,965	1,975
15°	1,672	2,110
25°	1,210	1,595
35°	1,170	625
45°	328	50
55°	112	17
65°	36	5
75°	10	3
85°	2	1
90°	0	1

Zonal Lumen Summary

Zone	Lumens	% Fixture
0° - 30°	1,369	71%
0° - 40°	1,794	93%
0° - 60°	1,913	99%
0° - 90°	1,929	100%
90° - 180°	0	0%
0° - 180°	1,929	100%

Luminance (cd/sq.m)

	Average Luminance
0°	76,135
45°	18,909
55°	7,969
65°	3,441
75°	1,511
85°	748

LUMEN OUTPUT MULTIPLIERS - CCT			
3000K	3500K	4000K	5000K
0.98	1.0	1.01	1.03

LUMEN OUTPUT MULTIPLIERS - FINISH	
Clear Semi-spec (AR LSS)	1.0
Metallic Silver (MS)	0.84
White Painted (WR)	1.03
Black Painted (BR)	0.60

LUMEN OUTPUT MULTIPLIERS - CRI	
80	1.0
90	0.874

HOW TO ESTIMATE DELIVERED LUMENS IN EMERGENCY MODE

Use the formula below to estimate the delivered lumens in emergency mode

Delivered Lumens = 1.25 x P x LPW

P = Ouput power of emergency driver. P = 10W for PS1055CP

LPW = Lumen per watt rating of the luminaire. This information is available on the ABL luminaire spec sheet.
The LPW rating is also available at Designlight Consortium.

© 2020-2023 Acuity Brands Lighting, Inc. All rights reserved. Rev. 03/16/23

DIMMER COMPATIBILITY

Not compatible with DALI or DMX dimmers. For specific compatible dimmers see below.

LINE VOLTAGE DIMMING:						
Type	**Forward Phase**	AL01 (500-1000lm)	AL02 (1000-2000lm)	AL03 (2000-3000lm)	AL04 (3000-5000lm)	Comment
MLV	Sensorswitch WPD	YES	YES	YES	YES	
MLV	Sensorswitch CMR PDT10 ADC VLP	YES	YES	YES	YES	
MLV	Synergy ISD 600LV	YES, 2x *	YES	YES	YES	* min 2 fixtures
INC	Synergy ISD 600 I	YES, 2x *	YES	YES	YES	* min 2 fixtures
MLV	Lutron Glyder GLV-600	YES	YES	YES	YES	
INC	Leviton SureSlide 6633	YES	YES	YES	YES	
MLV	Lutron Diva DVLV-600P	YES	YES	YES	YES	
MLV	Lutron Skylark SLV-600P	YES	YES	YES	YES	
INC	Lutron RadioRA 2 10ND	YES	YES	YES	YES	
MLV	Leviton SureSlide 6613-PLW	YES	YES	YES	YES	
INC	Lutron Diva DVCL-153P	YES	YES	YES	YES	
MLV	Leviton IPM06	YES, 2x *	YES	YES	YES	* min 2 fixtures
INC	**Leviton IPI06**	YES, 2x *	YES	YES	YES	* min 2 fixtures
INC	**Control4 C4-FPD 120**	YES	YES	YES	YES	
Type	Reverse Phase Dimmer Bank	AL01 (500-1000lm)	AL02 (1000-2000lm)	AL03 (2000-3000lm)	AL04 (3000-5000lm)	
ELV	Lutron Nova T NTELV-600	YES	YES	YES	YES	
ELV	Lutron Diva DVELV 600P	YES	YES	YES	YES	
ELV	Lutron Maestro MAELV 600	YES	YES	YES	YES	
ELV	Leviton Vizia VPE06-1LX	YES	YES	YES	YES	
ELV	**Leviton Illumatech IPE04**	YES	YES	YES	YES	
ELV	**Control4 C4-APD 120 REVERSE PHASE**	YES	YES	YES	YES	
Type	Miscellaneous Dimmers	AL01 (500-1000lm)	AL02 (1000-2000lm)	AL03 (2000-3000lm)	AL04 (3000-5000lm)	
PHA	Lutron RadioRA2 RRD-6NA	YES	YES	YES	YES	
PHA	**Lutron Maestro PRO LED+ RRD-PRO**	YES	YES	YES	YES	
Type	Control Systems	AL01 (500-1000lm)	AL02 (1000-2000lm)	AL03 (2000-3000lm)	AL04 (3000-5000lm)	
MLV	Lutron LP-RPM-4U	YES	YES	YES	YES	
PHA	Lutron LP-RPM-4A	YES	YES	YES	YES	
MLV	Lutron GRAPHIC EYE QSGRJ-3P	YES	YES	YES	YES	
PHA	Lutron PA Power Module PHPM-PA-120	YES	YES	YES	YES	
ELV	Lutron nLight nSP5PCD ELV	YES	YES	YES	YES	

DIMMER COMPATIBILITY

Not compatible with DALI or DMX dimmers. For specific compatible dimmers see below.

O-10V DIMMING:							
Manufacturer	System Type	Description	P/N	AL01 (500-1000lm)	AL02 (1000-2000lm)	AL03 (2000-3000lm)	AL04 (3000-5000lm)
ACUITY	Wall Box	sensorswitch, dimming switch with multi-way option	SPODMRA	YES	YES	YES	YES
ACUITY	Wall Box	sensorswitch, wall switch sensor, occupancy controlled dimming	WSX D WH	YES	YES	YES	YES
ACUITY	Control System	nLight	nPP16D	YES	YES	YES	YES
ACUITY	Control System	nLight	nPS 80 EZ	YES	YES	YES	YES
ACUITY	Control System	nLight Air	rPP20 D	YES	YES	YES	YES
Lutron	Other	0-10V (sink or source) PowPak wireless dimming module	RMJ-5T-DV-B	YES	YES	YES	YES
Wattstopper	Control System	Digital single relay room controller (0-10V)	LMRC-211	YES	YES	YES	YES
Crestron	Control System	DIN Rail 0-10V fluorescent dimmer, 4 feeds, 4 channels (Green Light System)	DIN-4DIMFLV4	YES	YES	YES	YES
Lutron	Other	Grafik Eye 0-10V adapter	GRX-TVI	YES	YES	YES	YES
Leviton	Wall Box	Illumatech 0-10V	IP710-DLX	YES	YES	YES	YES
Lutron	Control System	Mounted in the Homeworks QS panel - 0-10V dimmer (sink or source)	GRX-TVM2	YES	YES	YES	YES
Lutron	Wall Box	Nova 0-10V wallbox dimmer (use with PP-120-H line voltage relay)	NTFTV	YES	YES	YES	YES
Lutron	Wall Box	Nova 0-10V wallbox dimmer (use with PP-120-H line voltage relay)	NTSTV-DV	YES	YES	YES	YES
Lutron	Wall Box	Nova T	NFTV	YES	YES	YES	YES
Leviton	Wall Box	Renior II 0-10V	AWSMG-7DW	YES	YES	YES	YES

© 2020-2023 Acuity Brands Lighting, Inc. All rights reserved. Rev. 03/16/23

ADDITIONAL DATA

JOT
JUST ONE TOUCH

The Sensor Switch JOT enabled solution offers a wireless, app-free approach to single room lighting control. JOT enabled products use Bluetooth® Low Energy (BLE) technology to enable wireless dimming and switching.

Diagram

LBR8 Series

Sensor Switch
WSXA JOT

1. **Power:** Install JOT enabled fixtures and controls as instructed.
2. **Pair:** Insert the pairing tool into the pinhole on the wall switch; press and hold any button for 6 seconds.
3. **Play:** Once paired, each fixture will individually dim down to 10% brightness. All products will be fully functional.

COMPATIBLE 0-10V WALL-MOUNT DIMMERS		
MANUFACTURER	PART NO.	POWER BOOSTER AVAILABLE
Lutron®	Diva® DVTV	
	Diva® DVSCTV	
	Nova T® NTFTV	
	Nova® NFTV	
Leviton®	AWSMT-7DW	CN100
	AWSMG-7DW	PE300
	AMRMG-7DW	
	Leviton Centura Fluorescent Control System	
	IllumaTech® IP7 Series	
Synergy®	ISD BC	RDMFC
	SLD LPCS	
	Digital Equinox (DEQ BC)	
Douglas Lighting Controls	WPC-5721	
Entertainment Technology	Tap Glide TG600FAM120 (120V)	
	Tap Glide Heatsink TGH1500FAM120 (120V)	
	Oasis 0A2000FAMU	
Honeywell	EL7315A1019	EL7305A1010 (optional)
	EL7315A1009	
HUNT Dimming	Preset slide: PS-010-IV and PS-010-WH	
	Preset slide: PS-010-3W-IV and PS-010-3W-WH	
	Preset slide, controls FD-010: PS-IFC-010-IV and PS-IFC-010-WH-120/277V	
	Preset slide, controls FD-010: PS-IFC-010-3W-IV and PS-IFC-010-3W-WH-120/277V	
	Remote mounted unit: FD-010	
Lehigh Electronic Products	Solitaire	PBX
PDM Electrical Products	WPC-5721	
Starfield Controls	TR61 with DALI interface port	RT03 DALInet Router
WattStopper®	LS-4 used with LCD-101 and LCD-103	

© 2020-2023 Acuity Brands Lighting, Inc. All rights reserved. Rev. 03/16/23

EXAMPLE
Group Fixture Control*
*Appiication diagram applies for fixtures with eldoLED drivers only.

nPS 80 EZ Dimming/Control Pack (qty: 2 required)
nPODM 2P DX Dual On/Off/Dim Push-Button WallPod
nCM ADCX Daylight Sensor with Automatic Dimming Control
nCM PDT 9 Dual Technology Occupancy Sensor

Description: This design provides a dual on/off/dim wall station that enables manual control of the fixtures in Row A and Row B separately. Additionally, a daylight harvesting sensor is provided so the lights in Row B can be configured to dim automatically when daylight is available. An occupancy sensor turns off all lights when the space is vacant.

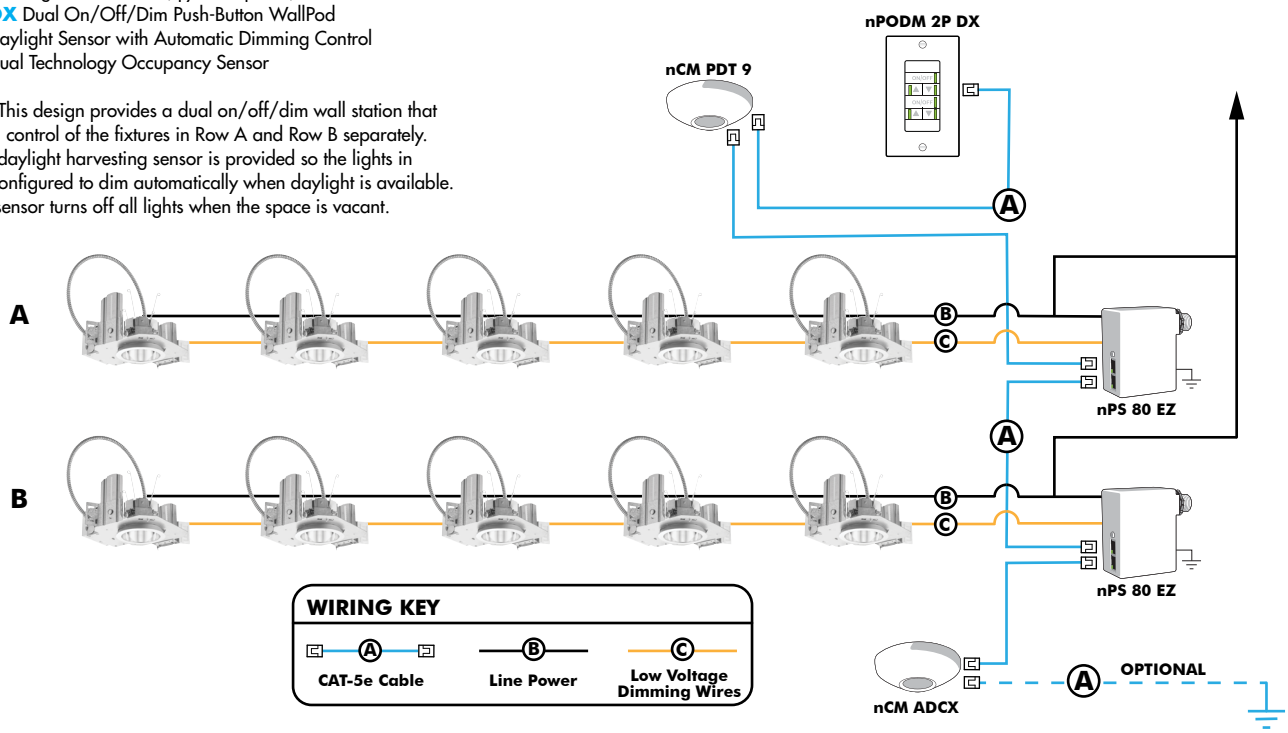

Choose Wall Controls

nLight offers multiple styles of wall controls - each with varying features and user experience.

Push-Button Wallpod
Traditional tactile buttons and LED user feedback

Graphic Wallpod
Full color touch screen provides a sophisticated look and feel

nLight® Wired Controls Accessories:			
Order as separate catalog number. Visit www.acuitybrands.com/products/controls/nlight for complete listing of nLight controls.			
WallPod Stations	**Model number**	**Occupancy sensors**	**Model Number**
On/Off	nPODM (Color)	Small motion 360°, ceiling (PIR/dual Tech)	nCM 9 / nCM PDT 9
On/Off & Raise/Lower	nPOD DX (Color)	Large motion 360°, ceiling (PIR/dual tech)	nCM 10 / nCM PDT 10
Graphic Touchscreen	nPOD GFX (Color)	Wide View (PIR/dual tech)	nWV 16 / nWV PDT 16
Photocell controls	**Model Number**	Wall Switch w/ Raise/Lower (PIR/dual tech)	nWSX LV DX / nWSX PDT LV DX
Dimming	nCM ADCX	**Cat-5 cables (plenum rated)**	**Model Number**
		10', CAT5 10FT	CAT5 10FT J1
		15, CAT5 15FT	CAT5 15FT J1

© 2020-2023 Acuity Brands Lighting, Inc. All rights reserved. Rev. 03/16/23

nLight® AIR Control Accessories:
Order as separate catalog number. Visit www.acuitybrands.com/products/controls/nlightair.

Wall switches	Model number
On/Off single pole	rPODB [color]
On/Off two pole	rPODB 2P [color]
On/Off & raise/lower single pole	rPODB DX [color]
On/Off & raise/lower two pole	rPODB 2P DX [color]
On/Off & raise/lower single pole	rPODBZ DX WH[1]

Notes

1 Can only be ordered with the RES7Z zone control sensor version.

UL924 Sequence of Operation

The below information applies to all nLight AIR devices with an EM option.

- EM devices will remain at their high-end trim and ignore wireless lighting control commands, unless a normal-power-sensed (NPS) broadcast is received at least every 8 seconds.
- Using the CL**AIR**ITY+ mobile app, EM devices must be associated with a group that includes a normal power sensing device to receive NPS broadcasts.
- Only non-emergency rPP20, rLSXR, rSBOR, rSDGR, and nLight AIR luminaires with version 3.4 or later firmware can provide normal power sensing for EM devices. See specification sheets for control devices and luminaires for more information on options that support normal power sensing.

nLight AIR

nLight AIR is the ideal solution for retrofit or new construction spaces where adding communication is cost prohibitive. The integrated nLight AIR rPP20 Power Pack is part of each Lithonia LDN Luminaire. These individually addressable controls offer the ultimate in flexibility during initial setup and for space repurposing.

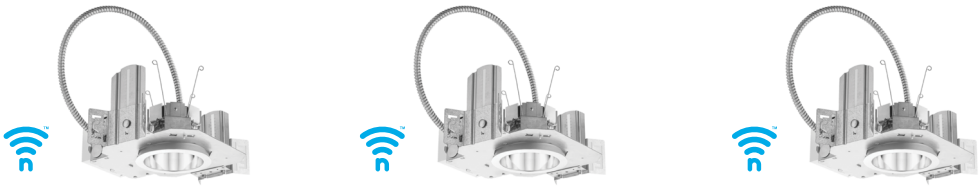

Simple as 1,2,3

1. Install the nLight® AIR fixtures with embedded smart sensor
2. Install the wireless battery-powered wall switch
3. With CL**AIR**ITY app, pair the fixtures with the wall switch and if desired, customize the sensor settings for the desired outcome

nLight AIR rPODB 2P DX Mobile Device

© 2020-2023 Acuity Brands Lighting, Inc. All rights reserved. Rev. 03/16/23