LITHONIA LIGHTING®

Catalog Number	
Notes	
Type	

LDN4 STATIC WHITE

4" Open and Wallwash LED
Non-IC
New Construction Downlight

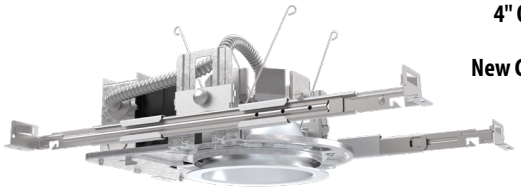

Open Trim

Wallwash Trim

FEATURES & SPECIFICATIONS

INTENDED USE — Typical applications include corridors, lobbies, conference rooms and private offices.

CONSTRUCTION — Galvanized steel mounting/plaster frame; galvanized steel junction box with bottom-hinged access covers and spring latches. Reflectors are retained by torsion springs.

Vertically adjustable mounting brackets with commercial bar hangers provide 3-3/4" total adjustment.

Two combination 1/2"-3/4" and four 1/2" knockouts for straight-through conduit runs. Capacity: 8 (4 in, 4 out). No. 12 AWG conductors, rated for 90°C.

Accommodates 12"-24" joist spacing.

Passive cooling thermal management for 25°C standard; high ambient (40°C) option available. Light engine and drivers are accessible from above or below ceiling.

Max ceiling thickness 1-1/2".

OPTICS — LEDs are binned to a 3-step MacAdam Ellipse; 80 CRI minimum. 90 CRI optional.

LED light source concealed with diffusing optical lens.

General illumination lighting with 1.0 S/MH and 55° cutoff to source and source image.

Self-flanged anodized reflectors in specular, semi-specular, or matte diffuse finishes. Also available in white and black painted reflectors.

A+ CAPABLE LUMINAIRE — This item is an A+ capable luminaire, which has been designed and tested to provide consistent color appearance and out-of-the-box control compatibility with simple commissioning when used with Acuity Brands controls products. All configurations of this luminaire are calibrated and tested to meet the Acuity Brands' specifications for chromatic consistency – including color rendering, color fidelity and color temperature tolerance around standard CIE chromaticity coordinates. To learn more about A+ standards, specifications, and testing visit www.acuitybrands.com/aplus.

UGR — UGR is zero for fixtures aimed at nadir with a cut-off equeal to or less than 60deg per CIE 117-1996 Discomfort Galre in Interior Lighting. UGR FAQs

ELECTRICAL — Multi-volt (120-277V, 50/60Hz) 0-10V dimming drivers mounted to junction box, 10% or 1% minimum dimming level available.

0-10V dimming fixture requires two (2) additional low-voltage wires to be pulled.

LUMEN MAINTENANCE — 70% lumen maintenance at 60,000 hours.

LISTINGS — Certified to US and Canadian safety standards. Wet location standard (covered ceiling). IP55 rated. ENERGY STAR® certified product. Drivers are ROHS compliant

GOVERNMENT PROCUREMENT — BAA – Product with the BAA option qualifies as a domestic end product under the Buy American Act as implemented in the FAR and DFARS. Product with the BAA option also qualifies as manufactured in the United States under DOT Buy America regulations.
BABA – Build America Buy America: Product with the BAA option also qualifies as produced in the United States under the definitions of the Build America, Buy America Act.
Please refer to www.acuitybrands.com/buy-american for additional information.

WARRANTY — 5-year limited warranty. This is the only warranty provided and no other statements in this specification sheet create any warranty of any kind. All other express and implied warranties are disclaimed. Complete warranty terms located at: www.acuitybrands.com/support/warranty/terms-and-conditions

Note: Actual performance may differ as a result of end-user environment and application.
All values are design or typical values, measured under laboratory conditions at 25 °C.
Specifications subject to change without notice.

PERFORMANCE DATA

LDN4			
Nominal	**Lumens**	**Wattage**	**Lm/W**
500	523.6	5.74	91.2
750	751.1	8.6	87.3
1000	1045	10.58	98.8
1500	1512	17.5	86.4
2000	2006	22.12	90.7
2500	2551	26.1	97.7
3000	3007	32.1	93.7
4000	4212	43	98.0

Notes
Tested in accordance with IESNA LM-79-08
Tested to current IES and NEMA standards under stabilized laboratory conditions
Based on LDN4 AR LSS 35K 80CRI

DISTRIBUTIONS

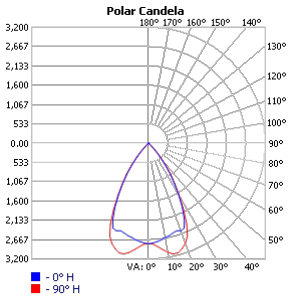

Open

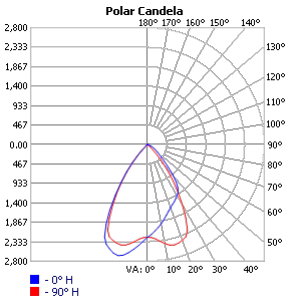

Wallwash

DIMENSIONS

LDN4 500-2000 Lumens

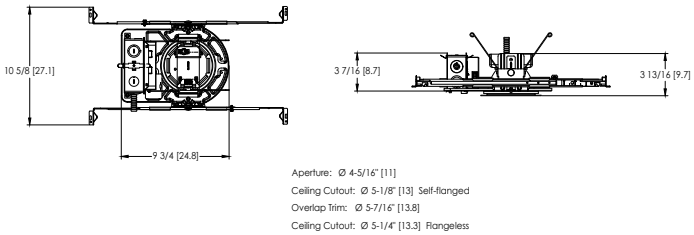

See page 4 for other fixture dimensions

Design Select options indicated by this color background.

ORDERING INFORMATION Lead times will vary depending on options selected. Consult with your sales representative.

Example: LDN4 35/15 LO4 AR LSS MVOLT EZ1

LDN4							
Series	**Color temperature**	**Lumens ‡**		**Trim Style**	**Trim Color**	**Trim Finish**	**Flange Color ‡**
LDN4 4" round	27/ 2700K 30/ 3000K 35/ 3500K 40/ 4000K 50/ 5000K	05 500 lumens 07 750 lumens 10 1000 lumens 15 1500 lumens	20 2000 lumens 25 2500 lumens 30 3000 lumens 40 4000 lumens	LO4 Downlight LW4 Wallwash	AR Clear WR ‡ White BR ‡ Black TRALTBD ‡ RAL painted trim TCPC ‡ Custom painted trim	LSS Semi-specular LD Matte diffuse LS Specular	TRW White painted flange TRBL Black painted flange FRALTBD RAL painted flange only FCPC Custom painted flange only

Voltage	Driver	Emergency ‡	Control Input ‡
MVOLT Multi-volt 120 120V 277 277V 347 ‡ 347V	GZ10 0-10V driver dims to 10% GZ1 0-10V driver dims to 1% D10 Minimum dimming 10% driver for use with JOT D1 Minimum dimming 1% driver for use with JOT EZ1 0-10V eldoLED driver with smooth and flicker-free deep dimming performance down to 1% EDAB eldoLED DALI SOLDRIVE dim to dark	(blank) No emergency option EL Emergency battery pack with integral test switch. 10W Constant Power, Not Certified in CA Title 20 MAEDBS ELR Emergency battery pack with remote test switch. 10W Constant Power, Not Certified in CA Title 20 MAEDBS ELSD Emergency battery pack with self-diagnostics, 10W Constant Power, integral test switch. Not Certified in CA Title 20 MAEDBS ELRSD Emergency battery pack with self-diagnostics, 10W Constant Power, remote test switch. Not Certified in CA Title 20 MAEDBS E10WCP Emergency battery pack, 10W Constant Power with integral test switch. Certified in CA Title 20 MAEDBS E10WCPR Emergency battery pack, 10W Constant Power with remote test switch. Certified in CA Title 20 MAEDBS E10WRSTAR Emergency battery pack, 10W with remote test switch and Iota STAR technology	(blank) No control option NPP16D nLight® network power/relay pack with 0-10V dimming for non-eldoLED drivers (GZ10, GZ1). NPP16DER nLight® network power/relay pack with 0-10V dimming for non-eldoLED drivers (GZ10, GZ1). ER controls fixtures on emergency circuit. N80 nLight™ Lumen Compensation JOT Wireless room control with "Just One Touch" pairing NPS80EZ nLight® dimming pack controls 0-10V eldoLED drivers (EZ10, EZ1). NPS80EZER nLight® dimming pack controls 0-10V eldoLED drivers (EZ10, EZ1). ER controls fixtures on emergency circuit. NLTAIR2 nLight® Air enabled NLTAIRER2 nLight® AIR Dimming Pack Wireless Controls. Controls fixtures on emergency circuit, not available with battery pack options NLTAIREM2 nLight® AIR Dimming Pack Wireless Controls. UL924 Emergency Operation, via power interrupt detection. Available with battery pack options.

Options	
HAO ‡	High ambient option (40°C)
CP ‡	Chicago Plenum
RRL___	RELOC®-ready luminaire connectors enable a simple and consistent factory installed option across all ABL luminaire brands. Refer to RRL for complete nomenclature. Available only in RRLA, RRLB, RRLAE, and RRLC12S.
BAA	Buy America(n) Act and/or Build America Buy America Qualified
90CRI	High CRI (90+)
SF ‡	Single fuse

design select

Items marked by a shaded background qualify for the Design Select program and ship in 15 days or less. To learn more about Design Select, visit www.acuitybrands.com/designselect.
*See ordering tree for details

(Maximum order quantity for design select lead times is 160.)

‡ Option Value Ordering Restrictions	
Option value	**Restriction**
Lumen Packages	Overall height varies based on lumen package, refer to dimensional charts on page 4
WR, BR	Not available with finish (LSS, LD, LS)
TRALTBD, FRALTBD	RALTBD for pricing only. Replace with applicable RAL number and finish when ready to order. See the RAL BROCHURE for available color options.
TRW, TRBL	Available with clear (AR) trim color only
TCPC, FCPC	CPC options for pricing only. Custom color chip needs to be sent in to your Customer Resolution specialist before order can be processed. Click HERE for more details
347	Not available with emergency options
All Emergency	12.5" of plenum depth or top access required for battery pack maintenance.
NPP16D, NPP16DER	Not available with MVOLT. ER for use with generator supply EM power. Will require an emergency hot feed and normal hot feed.
SF	Must specify 120 or 277 volt
N80	Fixture begins at 80% light level. Must be specified with NPS80EZ or NPS80EZ ER. Only available with EZ10 and EZ1 drivers.
NPP16D, NPP16DER, NPPS80EZ, NPS80EZER	Specify voltage. ER for use with generator supply EM power. Will require an emergency hot feed and normal hot feed.
NLTAIR2, NLTAIRER2, NLATAIREM2	Not available with CP, NPS80EZ, NPS80EZER, NPP16D, NPP16DER or N80 options. Not recommended for metal ceiling installations.
NLTAIR2	When combined with EZ1 or EZ10 drivers, can be used as a normal power
JOT	Must specify D10 or D1 driver. Not available with nLight options. Not available with CP. Not recommended for metal ceiling installation. Not for use with emergency backup power systems other than battery packs.
HAO	Fixture height is 5-11/16" for all lumen packages with HAO.
CP	Must specify voltage for 3000lm. Not available with emergency battery pack option.
E10WRSTAR	Not available with wet location, EC1, EC6, QDS, CP, 347V, NPS80EZ ER, NLTAIRER2, NLTAIREM2, ALO3 & ALO4 w/DALI, OR 2000-4500 lumens w/JOT. Top access installation or 17.5" plenum clearance required for roomside installation. Not available with integral test switch.

© 2015-2024 Acuity Brands Lighting, Inc. All rights reserved. Rev. 05/24/24

Accessories: *Order as separate catalog number.*	
PS1055CP	FMC Power Sentry batterypack, T20 compliant, field installable, 10w constant power
EAC ISSM 375	Compact interruptible emergency AC power system
EAC ISSM 125	Compact interruptible emergency AC power system
GRA46 JZ	Oversized trim ring with 6" outside diameter
SCA4	Sloped Ceiling Adapter. Degree of slope must be specified (5D, 10D, 15D, 20D, 25D, 30D). Ex: SCA4 10D.

Emergency Battery Pack Options - Field Installable

Battery Model Number	Wattage	Runtime (Minutes)	Lumen Output* @ 120 Lumens/Watt	Other
ILB CP07 2H A	7W	120	840	Storm Shelter/ 2-hour Runtime
ILB CP10 A	10W	90	1200	
ILBLP CP10 HE SD A+	10W	90	1200	Title 20, Self Diagnostic
ILBLP CP15 HE SD A+	15W	90	1800	Title 20, Self Diagnostic
ILB CP20 HE A	20W	90	2400	Title 20
ILB CP20 HE SD A	20W	90	2400	Title 20, Self Diagnostic
ILBHI CP10 HE SD A+	10W	90	1200	347-480V AC Input, Title 20, Self Diagnostic
ILBHI CP15 HE SD A+	15W	90	1800	347-480V AC Input, Title 20, Self Diagnostic

All the above are UL 924 Listed products that are certified for field install external/remote to the fixture.
*Minimum delivered lumen output to assist in product selection for increased fixture mounting height.
The CP10 delivered emergency illuminations outperforms legacy 1400 lumen fluorescent emergency ballasts.
Please contact us at techsupport@iotaengineering.com for any Emergency Battery related questions.

© 2015-2024 Acuity Brands Lighting, Inc. All rights reserved. Rev. 05/24/24

PHOTOMETRY

Distribution Curve	Distribution Data	Output Data	Illuminance Data at 30" Above Floor for a Single Luminaire

LDN4 35/30 LO4AR, input watts: 32.1, delivered lumens: 3122.6, LM/W = 88.52, spacing criterion at 0= 1.04, test no. ISF 30712P249.

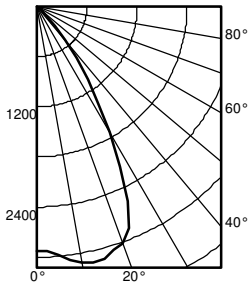

	Ave	Lumens
0	2927	
5	2989	290
15	3120	875
25	2575	1136
35	1062	667
45	149	148
55	3	5
65	2	1
75	0	0
85	0	0
90	0	

Zone	Lumens	% Lamp
0° - 30°	2301.2	73.7
0° - 40°	2968.2	95.1
0° - 60°	3121.1	100.0
0° - 90°	3122.6	100.0
90° - 120°	0.0	0.0
90° - 130°	0.0	0.0
90° - 150°	0.0	0.0
90° - 180°	0.0	0.0
0° - 180°	3122.6	*100.0

*Efficiency

Mounting Height	Inital FC Center Beam	50% beam - 55.6° Diameter	FC	10% beam - 78.0° Diameter	FC
8.0	96.8	5.8	48.4	8.9	9.7
10.0	52.0	7.9	26.0	12.2	5.2
12.0	32.4	10.0	16.2	15.4	3.2
14.0	22.1	12.1	11.1	18.6	2.2
16.0	16.1	14.2	8.0	21.9	1.6

LUMEN OUTPUT MULTIPLIERS - CCT					
	2700K	3000K	3500K	4000K	5000K
80CRI	0.950	0.966	1.000	1.025	1.101

LUMEN OUTPUT MULTIPLIERS - FINISH			
	Clear (AR)	White (WR)	Black (BR)
Specular (LS)	1.0	N/A	N/A
Semi-specular (LSS)	0.950	N/A	N/A
Matte diffuse (LD)	0.85	N/A	N/A
Painted	N/A	0.87	0.73

HOW TO ESTIMATE DELIVERED LUMENS IN EMERGENCY MODE

Use the formula below to estimate the delivered lumens in emergency mode

Delivered Lumens = 1.25 x P x LPW

P = Ouput power of emergency driver. P = 10W for PS1055CP

LPW = Lumen per watt rating of the luminaire. This information is available on the ABL luminaire spec sheet.
The LPW rating is also available at Designlight Consortium.

Notes
- Tested in accordance with IESNA LM-79-08.
- Tested to current IES and NEMA standards under stabilized laboratory conditions.
- CRI: 80 typical.

DOWNLIGHTING: One Lithonia Way Conyers, GA 30012 Phone: 800-705-SERV (7378) www.lithonia.com
© 2015-2024 Acuity Brands Lighting, Inc. All rights reserved. Rev. 05/24/24

LDN4

* All dimensions are inches (centimeters) unless otherwise noted.

LDN4 500-2000 Lumens

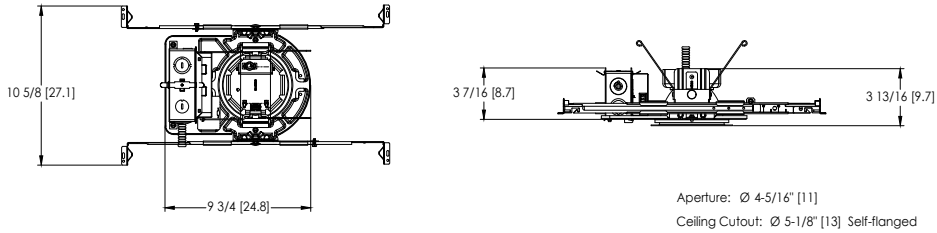

Aperture: Ø 4-5/16" [11]
Ceiling Cutout: Ø 5-1/8" [13] Self-flanged
Overlap Trim: Ø 5-7/16" [13.8]
Ceiling Cutout: Ø 5-1/4" [13.3] Flangeless

LDN4 2000-4000 Lumens

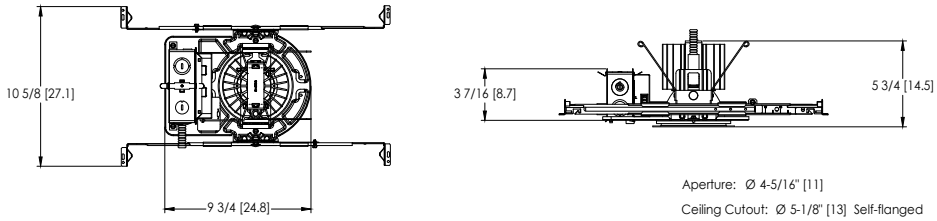

Aperture: Ø 4-5/16" [11]
Ceiling Cutout: Ø 5-1/8" [13] Self-flanged
Overlap Trim: Ø 5-7/16" [13.8]
Ceiling Cutout: Ø 5-1/4" [13.3] Flangeless

LDN4 CP

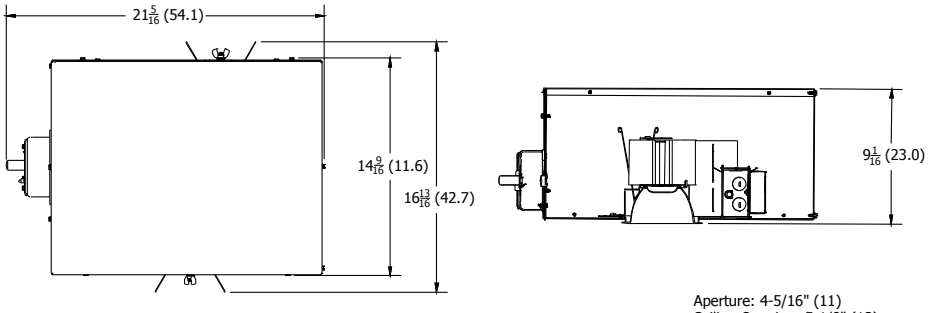

Aperture: 4-5/16" (11)
Ceiling Opening: 5-1/8" (13)
Overlap Trim: 5-7/16" (13.8)

LDN4 EL

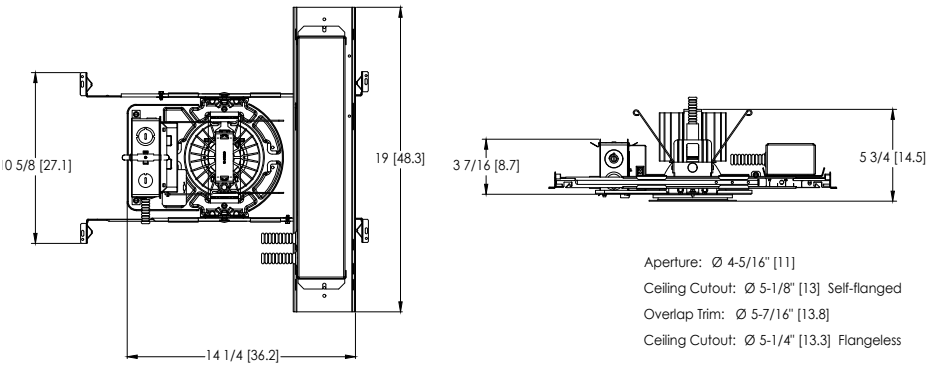

Aperture: Ø 4-5/16" [11]
Ceiling Cutout: Ø 5-1/8" [13] Self-flanged
Overlap Trim: Ø 5-7/16" [13.8]
Ceiling Cutout: Ø 5-1/4" [13.3] Flangeless

DOWNLIGHTING: One Lithonia Way Conyers, GA 30012 Phone: 800-705-SERV (7378) www.lithonia.com

© 2015-2024 Acuity Brands Lighting, Inc. All rights reserved. Rev. 05/24/24

ADDITIONAL DATA

JOT
JUST ONE TOUCH

The Sensor Switch JOT enabled solution offers a wireless, app-free approach to single room lighting control. JOT enabled products use Bluetooth® Low Energy (BLE) technology to enable wireless dimming and switching.

Diagram

LDN4 Series

Sensor Switch
WSXA JOT

1. **Power:** Install JOT enabled fixtures and controls as instructed.
2. **Pair:** Insert the pairing tool into the pinhole on the wall switch; press and hold any button for 6 seconds.
3. **Play:** Once paired, each fixture will individually dim down to 10% brightness. All products will be fully functional.

COMPATIBLE 0-10V WALL-MOUNT DIMMERS		
MANUFACTURER	PART NO.	POWER BOOSTER AVAILABLE
Lutron®	Diva® DVTV	
	Diva® DVSCTV	
	Nova T® NTFTV	
	Nova® NFTV	
Leviton®	AWSMT-7DW	CN100
	AWSMG-7DW	PE300
	AMRMG-7DW	
	Leviton Centura Fluorescent Control System	
	IllumaTech® IP7 Series	
Synergy®	ISD BC	RDMFC
	SLD LPCS	
	Digital Equinox (DEQ BC)	
Douglas Lighting Controls	WPC-5721	
Entertainment Technology	Tap Glide TG600FAM120 (120V)	
	Tap Glide Heatsink TGH1500FAM120 (120V)	
	Oasis 0A2000FAMU	
Honeywell	EL7315A1019	EL7305A1010 (optional)
	EL7315A1009	
HUNT Dimming	Preset slide: PS-010-IV and PS-010-WH	
	Preset slide: PS-010-3W-IV and PS-010-3W-WH	
	Preset slide, controls FD-010: PS-IFC-010-IV and PS-IFC-010-WH-120/277V	
	Preset slide, controls FD-010: PS-IFC-010-3W-IV and PS-IFC-010-3W-WH-120/277V	
	Remote mounted unit: FD-010	
Lehigh Electronic Products	Solitaire	PBX
PDM Electrical Products	WPC-5721	
Starfield Controls	TR61 with DALI interface port	RT03 DALInet Router
WattStopper®	LS-4 used with LCD-101 and LCD-103	

DOWNLIGHTING: One Lithonia Way Conyers, GA 30012 Phone: 800-705-SERV (7378) www.lithonia.com

© 2015-2024 Acuity Brands Lighting, Inc. All rights reserved. Rev. 05/24/24

EXAMPLE
Group Fixture Control*
*Appiication diagram applies for fixtures with eldoLED drivers only.

nPS 80 EZ Dimming/Control Pack (qty: 2 required)
nPODM 2P DX Dual On/Off/Dim Push-Button WallPod
nCM ADCX Daylight Sensor with Automatic Dimming Control
nCM PDT 9 Dual Technology Occupancy Sensor

Description: This design provides a dual on/off/dim wall station that enables manual control of the fixtures in Row A and Row B separately. Additionally, a daylight harvesting sensor is provided so the lights in Row B can be configured to dim automatically when daylight is available. An occupancy sensor turns off all lights when the space is vacant.

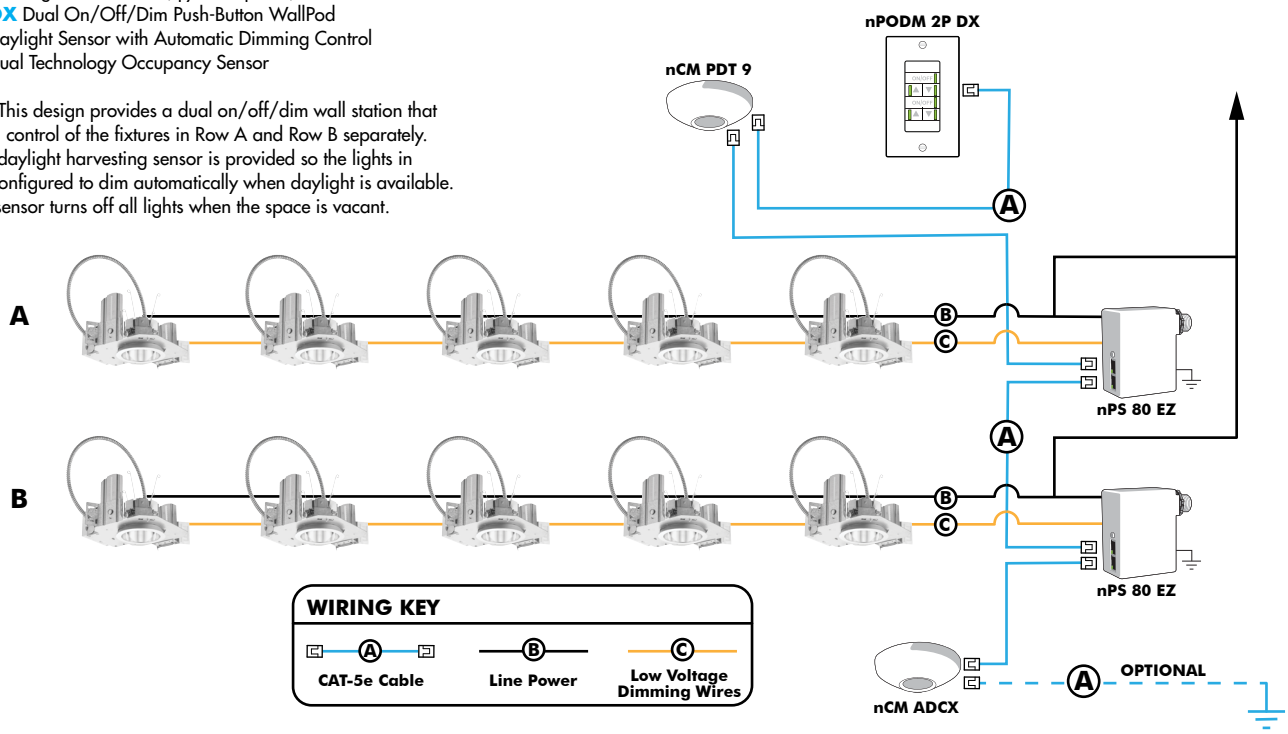

Choose Wall Controls

nLight offers multiple styles of wall controls - each with varying features and user experience.

Push-Button Wallpod
Traditional tactile buttons and LED user feedback

Graphic Wallpod
Full color touch screen provides a sophisticated look and feel

nLight® Wired Controls Accessories:			
Order as separate catalog number. Visit www.acuitybrands.com/products/controls/nlight for complete listing of nLight controls.			
WallPod Stations	**Model number**	**Occupancy sensors**	**Model Number**
On/Off	nPODM (Color)	Small motion 360º, ceiling (PIR/dual Tech)	nCM 9 / nCM PDT 9
On/Off & Raise/Lower	nPOD DX (Color)	Large motion 360º, ceiling (PIR/dual tech)	nCM 10 / nCM PDT 10
Graphic Touchscreen	nPOD GFX (Color)	Wide View (PIR/dual tech)	nWV 16 / nWV PDT 16
Photocell controls	**Model Number**	Wall Switch w/ Raise/Lower (PIR/dual tech)	nWSX LV DX / nWSX PDT LV DX
Dimming	nCM ADCX	**Cat-5 cables (plenum rated)**	**Model Number**
		10', CAT5 10FT	CAT5 10FT J1
		15, CAT5 15FT	CAT5 15FT J1

DOWNLIGHTING: One Lithonia Way Conyers, GA 30012 Phone: 800-705-SERV (7378) www.lithonia.com
© 2015-2024 Acuity Brands Lighting, Inc. All rights reserved. Rev. 05/24/24

nLight® AIR Control Accessories:
Order as separate catalog number. Visit www.acuitybrands.com/products/controls/nlightair.

Wall switches	Model number
On/Off single pole	rPODB [color]
On/Off two pole	rPODB 2P [color]
On/Off & raise/lower single pole	rPODB DX [color]
On/Off & raise/lower two pole	rPODB 2P DX [color]
On/Off & raise/lower single pole	rPODBZ DX WH[1]

Notes

1 Can only be ordered with the RES7Z zone control sensor version.

UL924 Sequence of Operation

The below information applies to all nLight AIR devices with an EM option.

- EM devices will remain at their high-end trim and ignore wireless lighting control commands, unless a normal-power-sensed (NPS) broadcast is received at least every 8 seconds.
- Using the CL**AIR**ITY+ mobile app, EM devices must be associated with a group that includes a normal power sensing device to receive NPS broadcasts.
- Only non-emergency rPP20, rLSXR, rSBOR, rSDGR, and nLight AIR luminaires with version 3.4 or later firmware can provide normal power sensing for EM devices. See specification sheets for control devices and luminaires for more information on options that support normal power sensing.

nLight AIR

nLight AIR is the ideal solution for retrofit or new construction spaces where adding communication is cost prohibitive. The integrated nLight AIR rPP20 Power Pack is part of each Lithonia LDN Luminaire. These individually addressable controls offer the ultimate in flexibility during initial setup and for space repurposing.

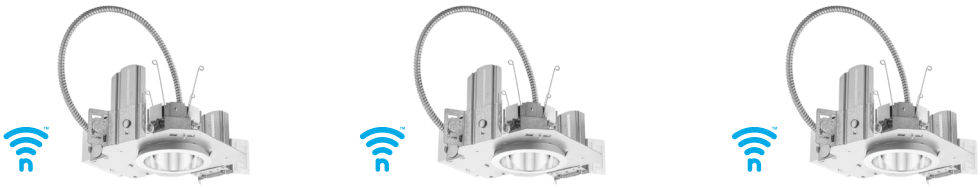

Simple as 1,2,3

1. Install the nLight® AIR fixtures with embedded smart sensor
2. Install the wireless battery-powered wall switch
3. With CL**AIR**ITY app, pair the fixtures with the wall switch and if desired, customize the sensor settings for the desired outcome

nLight AIR rPODB 2P DX Mobile Device

© 2015-2024 Acuity Brands Lighting, Inc. All rights reserved. Rev. 05/24/24