# LED IMPORTANT SAFETY INSTRUCTIONS

**READ AND FOLLOW ALL SAFETY INSTRUCTIONS!**
**SAVE THESE INSTRUCTIONS AND DELIVER TO OWNER AFTER INSTALLATION**

To reduce the risk of death, personal injury or property damage from fire, electric shock, falling parts, cuts/abrasions, and other hazards, please read all warnings and instructions included with and on the fixture box and all fixture labels.
Before installing, servicing, or performing routine maintenance upon this equipment, follow these general precautions.
Installation and service of luminaires should be performed by a **qualified licensed electrician.**
Maintenance of the luminaires should be performed by person(s) familiar with the luminaires' construction and operation and any hazards involved. Regular fixture maintenance programs are recommended.
It will occasionally be necessary to clean the outside of the refractor/lens. Frequency of cleaning will depend on ambient dirt level and minimum light output which is acceptable to user. Refractor/lens should be washed in a solution of warm water and any mild, non-abrasive household detergent, rinsed with clean water and wiped dry. Should optical assembly become dirty on the inside, wipe refractor/lens and clean in above manner, replacing damaged gaskets as necessary.
**DO NOT INSTALL DAMAGED PRODUCT!** This luminaire has been properly packed so that no parts should have been damaged during transit. Inspect to confirm. Any part damaged or broken during or after assembly should be replaced.
Recycle: For information on how to recycle LED electronic products, please visit www.epa.gov.
These instructions do not purport to cover all details or variations in equipment nor to provide every possible contingency to meet in connection with installation, operation, or maintenance. Should further information be desired or should particular problems arise which are not covered sufficiently for the purchaser's or owner's purposes, this matter should be referred to Acuity Brands Lighting, Inc.

**WARNING**
**RISK OF ELECTRIC SHOCK**

Disconnect or turn off power before installation or servicing.
Verify that supply voltage is correct by comparing it with the luminaire label information.
Make all electrical and grounded connections in accordance with the National Electrical Code (NEC) and any applicable local code requirements.
All wiring connections should be capped with UL approved recognized wire connectors.

**WARNING**
**RISKOF BURN**

Allow lamp/fixture to cool before handling.
Do not touch enclosure or light source.
Do not exceed maximum wattage marked on luminaire label.
Follow all manufacturer's warnings, recommendations and restrictions for: driver type, burning position, mounting locations/methods, replacement and recycling.

**CAUTION**
**RISK OF INJURY**

Wear gloves and safety glasses at all times when removing luminaire from carton, installing, servicing or performing maintenance.
Avoid direct eye exposure to the light source while it is on.

**CAUTION**
**RISK OF FIRE**

Keep combustible and other materials that can burn, away from lamp/lens.
Do not operate in close proximity to persons, combustible materials or substances affected by heat or drying.

**FOR ANY QUESTIONS, PLEASE CONTACT 1-800-705-7378**

**UT4540 Rev. G**

## LED IMPORTANT SAFETY INSTRUCTIONS

CAUTION: RISK OF PRODUCT DAMAGE

Never connect components under load.
Do not mount or support these fixtures in a manner that can cut the outer jacket or damage wire insulation.
Unless individual product specifications deem otherwise: Never connect an LED product directly to dimmer packs, occupancy sensors, timing devices, or other related control devices. LED fixtures must be powered directly off a switched circuit.
Unless individual product specifications deem otherwise: Do not restrict fixture ventilation. Allow for some volume of airspace around fixture. Avoid covering LED fixtures with insulation, foam, or other material that will prevent convection or conduction cooling.
Unless individual product specifications deem otherwise: Do not exceed fixtures maximum ambient temperature.
Only use fixture in its intended location.
LED products are Polarity Sensitive. Ensure proper Polarity before installation.
Electrostatic Discharge (ESD): ESD can damage LED fixtures. Personal grounding equipment must be worn during all installation or servicing of the unit.
Do not touch individual electrical components as this can cause ESD, shorten lamp life, or alter performance.
Some components inside the fixture may not be serviceable. In the unlikely event your unit may require service, stop using the unit immediately and contact an ABL representative for assistance.
Always read the fixtures complete installation instructions prior to installation for any additional fixture specific warnings.

**Please see product specific installation instructions for additional warnings or any applicable FCC or other regulatory statements.**

**Failure to follow any of these instructions could void product warranties. For a complete listing of product Terms and Conditions, please visit www.acuitybrands.com.**

| Our Brands | Indoor/Outdoor | Indoor Lighting | Outdoor Lighting | Controls | Daylighting |
|---|---|---|---|---|---|
| | Lithonia Lighting | Gotham | American Electric Lighting | DARK TO LIGHT | SunOptics |
| | Carandini | Mark Architectural Lighting | Antique Street Lamps | LC&D | |
| | Holophane | Peerless | Hydrel | ROAM | |
| | RELOC | Renaissance Lighting | Tersen | Sensor Switch | |
| | Light Concepts | Winona Lighting | | Synergy | |

**Acuity Brands Lighting, Inc. assumes no responsibility for claims arising out of improper or careless installation or handling of its products.**

ABL LED General Warnings, Form No. 503.203

© 2010 Acuity Brands Lighting, Inc. All rights reserved. 12/01/10

NOTE: This equipment has been tested and found to comply with the limits for a Class A digital device, pursuant to part 15 of the FCC Rules. These limits are designed to provide reasonable protection against harmful interference when the equipment is operated in a commercial environment. This equipment generates, uses, and can radiate radio frequency energy and, if not installed and used in accordance with the instruction manual, may cause harmful interference to radio communications. Operation of this equipment in a residential area is likely to cause harmful interference in which case the user will be required to correct the interference at his own expense.

# <u>Installation Instructions</u>
# BLTR and 2BLTR Relight Assembly

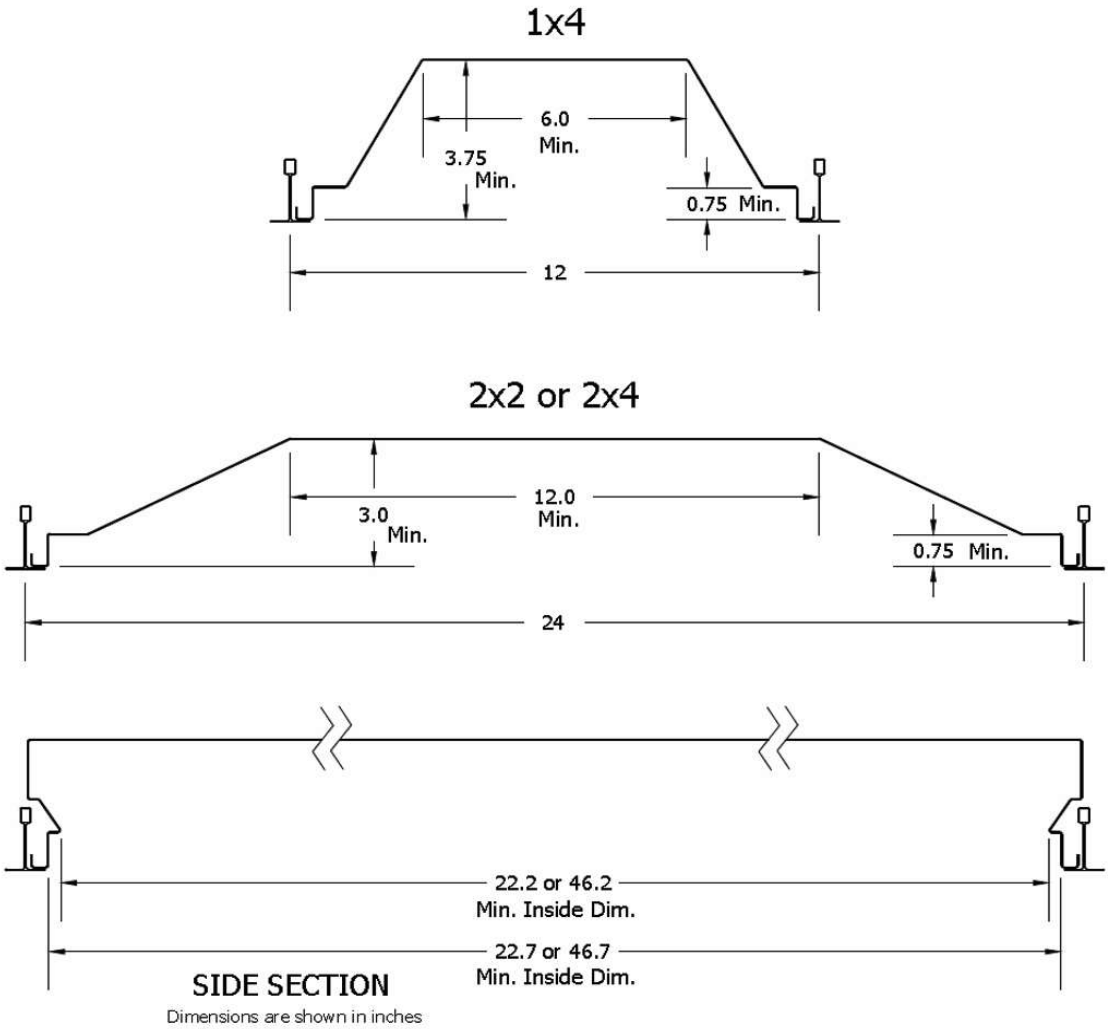


This Relight assembly was engineered to upgrade most recessed fixtures mounted in T-grid ceiling installations, including most parabolic and lensed troffers from all major manufacturers.

Minimum dimensional requirements are shown above. A trial installation of this product is recommended prior to purchasing project quantities.

## READ AND FOLLOW ALL SAFETY INSTRUCTIONS!
## SAVE THESE INSTRUCTIONS AND DELIVER TO OWNER AFTER INSTALLATION.

### IMPORTANT SAFETY INSTRUCTIONS

**WARNING: FAILURE TO FOLLOW THESE INSTRUCTIONS AND WARNINGS MAY RESULT IN DEATH, SERIOUS INJURY OR SIGNIFICANT PROPERTY DAMAGE.** For your protection, read and follow these warnings and instructions carefully before installing or maintaining this equipment. These instructions do not attempt to cover all installation and maintenance situations. If you do not understand these instructions or additional information is required, contact Acuity Brands Lighting or your local Acuity Brands Lighting distributor.

**WARNING: RISK OF ELECTRIC SHOCK.** Never connect to, disconnect from or service while circuit equipment is energized.

**WARNING: RISK OF FIRE.** Lamps are hot. Keep combustible materials away from hot parts. Observe lamp manufacturer's warnings, recommendations and restrictions on lamp operation and maintenance. Make sure lamps are correctly installed. Use supply conductors with a minimum insulation temperature rating as specified on equipment.

**WARNING:** Do not use abrasive materials, glass cleaners or other solvents on reflector or lens. Use of these substances may damage fixture, which may result in personal injury.

**WARNING: RISK OF PERSONAL INJURY.** This equipment may have sharp edges. Wear gloves to prevent cuts or abrasions when removing from carton, handling and maintaining this equipment.

- Do not install a damaged fixture.
- This equipment must be installed in accordance with all applicable installation codes and ordinances.
- Proper grounding is required to ensure personal safety.
- All service shall be performed by qualified service personnel. This equipment must be installed and maintained in accordance with all applicable installation codes by a person familiar with the construction and operation of this product and any hazards involved.

**CAUTION:** Observe lamp manufacturer's recommendations and restrictions on lamp operation, including but not limited to ballast type, burning position, replacement, and cycling. We recommend only lamps that comply with applicable ANSI standards.

All fluorescent lamps contain mercury. Follow disposal laws. See www.lamprecycle.org or contact your state environmental protection department for more information.

Acuity Brands Lighting, Inc. assumes no responsibility for claims arising out of improper or careless installation or handling of this product.

**SAVE THESE INSTRUCTIONS**

Acuity Brands Lighting, Inc.
One Lithonia Way
Conyers, GA 30012
770-922-9000

UT4540
REV. G

## FOR ANY QUESTIONS, PLEASE CONTACT 1-800-705-7378

# Class R Type II Reflector Relight Assembly

Installation Instructions for Fixture Conversion Retrofit Classified by Underwriters Laboratories, Inc.

**Reflector Kit Type II:** Reflector installation or replacement
Lamp holder relocation, removal or replacement
Ballast relocation, removal, replacement or addition

## Installation Instructions

The installation of the Class R reflector assembly Type II shall be performed by qualified personnel by completing the steps listed below.

This Relight assembly consists of:

(1) Unitized Light Engine Assembly (with UL approvals on label)
(2) Adapter Brackets (BLT4DR, 2BLT2DR, & 2BLT4DR kits do not include adapter brackets)
(6) #8 self-drilling TEKS screws

Verify the contents of the Relight assembly by using the pictures below.

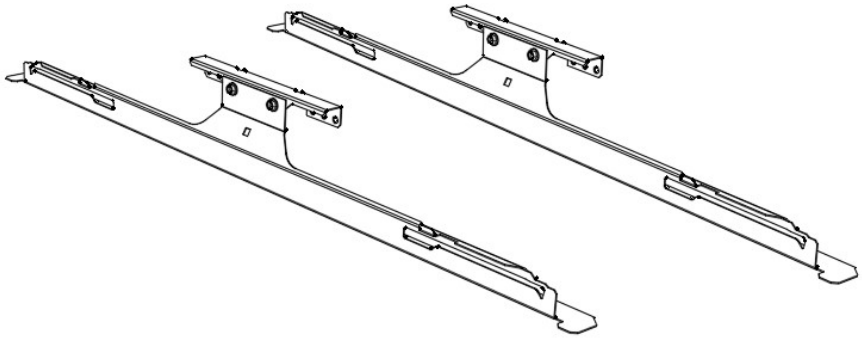

Adapter Brackets

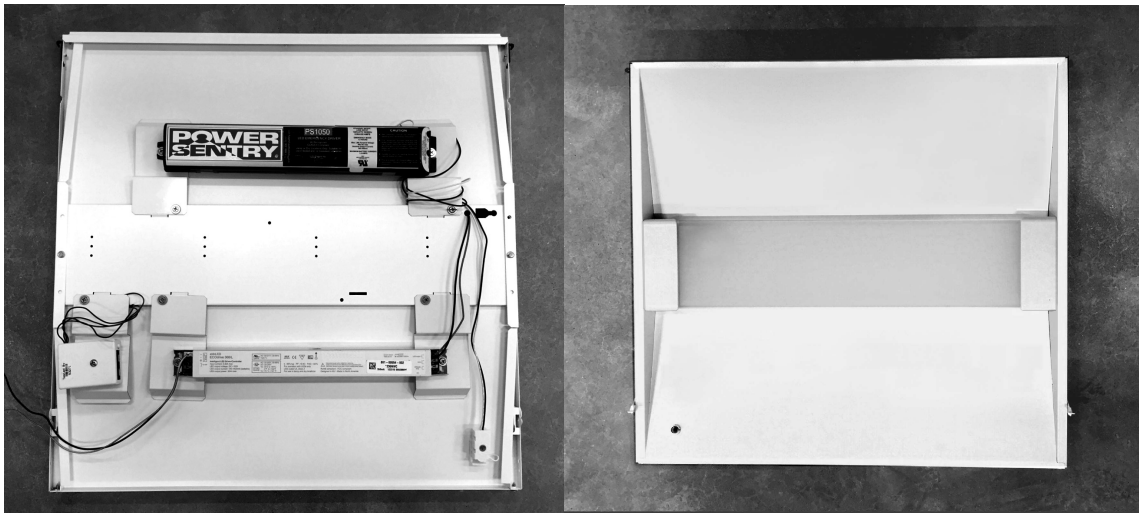


Unitized Light Engine Assembly – Front & Back (2 foot version shown, 4 foot version is similar)

(Some components shown above, on the back of the Assembly, are optional)

**Step One:**

Locate the lighting fixture that is to be retrofitted. **Turn off power.**

**WARNING:** Electrical shock can occur during retrofit component installation if power is not turned off.
**WARNING:** Installation of this retrofit assembly requires a person familiar with the construction and operation of fluorescent luminaire electrical system and the hazard involved.
**WARNING:** Unless otherwise indicated, do not make or alter any opening in the compartment of wiring or electrical components during installation of this retrofit assembly.
**WARNING:** Insure that existing fixture is and remains properly connected to building ground. Use of any other than Lithonia Lighting supplied screws to install assembly may result in ungrounded fixture components.
**WARNING:** To prevent wiring damage or abrasion, do not expose wiring to edges of sheet metal or other sharp objects.

- NOT FOR USE WITH DIMMERS
- For cUL units, this retrofit kit is acceptable as a component of a luminaire where the suitability of the combination shall be determined by CSA or authorities having jurisdiction.

Remove existing components from host fixture.

Open and remove existing fixture's door or louver. Remove lamps and channel cover. Identify the power supply wires and unplug the existing Ballast Disconnect Plug (BDP).. Remove all lampholders, brackets, wire, and ancillary components. Remove any existing bracketry from previous relighting or retrofitting.

Host fixture housing should now be completely empty, except for the incoming power wiring.

**Step Two:**
Install *Adapter Brackets*

Install *Adapter Brackets* to existing fixture end plates at each end of the fixture housing, sandwiching the outer flange between T-Grid and fixture housing. Attach *Adapter Brackets* by driving two TEKS screws through two holes in each Adapter Bracket and into the endplates of the existing host housing.

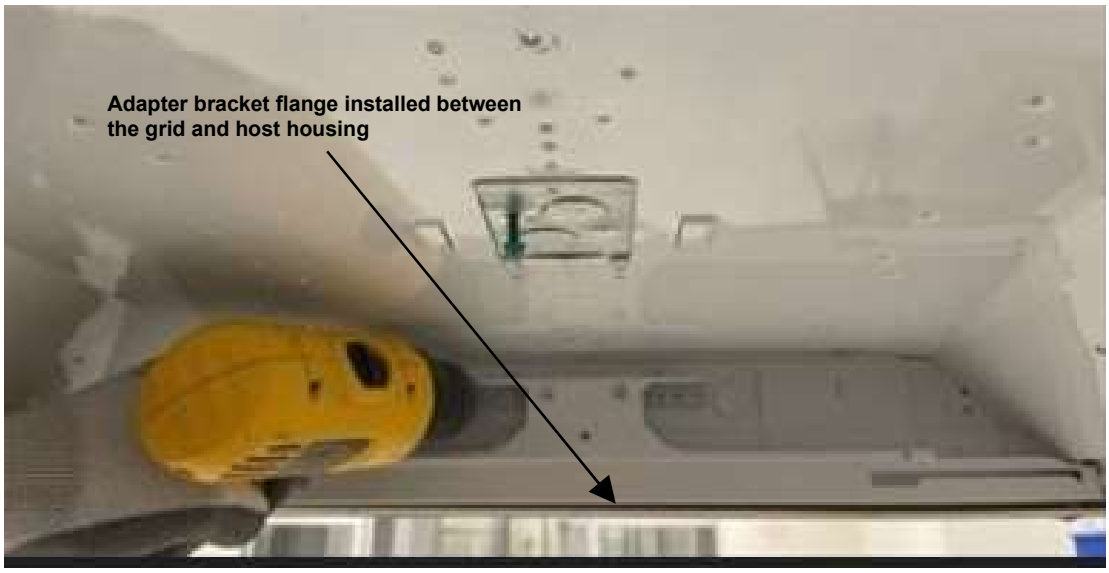


If kits are being installed into Lithonia Lighting T5, CF, or T8 U-Lamp ***Avante*** host housings, the top portion of the adapter bracket will need to be removed, and the lower hinge / latch portion will be screwed directly to the ***Avante*** endplate at each end of the host housing, using the self-drilling TEKS screws.

**Step Three:**
Install *Unitized Light Engine Assembly.*

Engage the black hinge hooks on each end of the Assembly into the corresponding slots in the Adapter Brackets, and slide completely down both slots, as shown by the arrow below.

Connect the incoming power to the driver.

Securely attach the ground wire and security cable from your Relight assembly to the host housing.

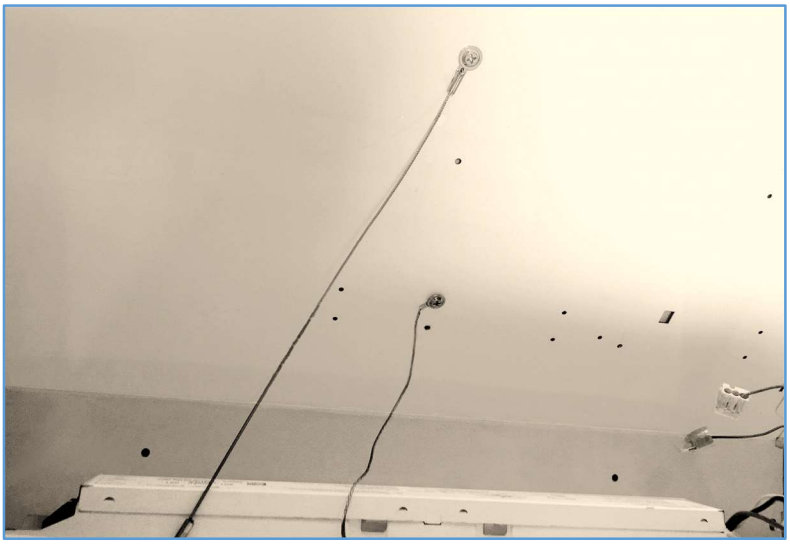

Close and latch the Relight assembly door, making sure that no wires are pinched or exposed.

**If your assembly is equipped with an optional FAO, (Field Adjustable Output Module), then skip to Optional Step Four.**

# Installation Instructions

**BLTDR and 2BLTDR Relight Assembly**

BLT4DR, 2BLT2DR, & 2BLT4DR kits and are designed to install only into Lithonia Lighting GT8, SP8, ES8/ES5, RT8S/RT5S, and M Series existing housings, without the need to install adapter brackets into the host housing.

### Class R Type II Reflector Relight Assembly

Installation Instructions for Fixture Conversion Retrofit Classified by Underwriters Laboratories, Inc.

**Reflector Kit Type II:** Reflector installation or replacement
Lamp holder relocation, removal or replacement
Ballast relocation, removal, replacement or addition

### Installation Instructions

The installation of the Class R reflector assembly Type II shall be performed by qualified personnel by completing the steps listed below.

This Relight assembly consists of:
(1) Unitized Light Engine Doorframe Assembly (with UL approvals on label)

Verify the contents of the Relight assembly by using the pictures below.

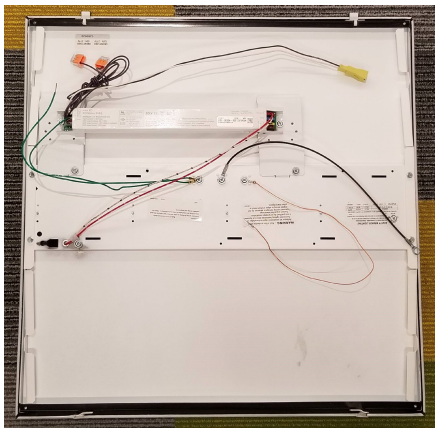

Unitized Light Engine Doorframe Assembly – Front & Back (2 foot version shown, 4 foot version is similar)

(Some components shown above, on the back of the Assembly, are optional)

**Step One:**
Locate the lighting fixture that is to be retrofitted. **Turn off power.**

**WARNING:** Electrical shock can occur during retrofit component installation if power is not turned off.
**WARNING:** Installation of this retrofit assembly requires a person familiar with the construction and operation of fluorescent luminaire electrical system and the hazard involved.
**WARNING:** Unless otherwise indicated, do not make or alter any opening in the compartment of wiring or electrical components during installation of this retrofit assembly.
**WARNING:** Insure that existing fixture is and remains properly connected to building ground. Use of any other than Lithonia Lighting supplied screws to install assembly may result in ungrounded fixture components.
**WARNING:** To prevent wiring damage or abrasion, do not expose wiring to edges of sheet metal or other sharp objects.

- NOT FOR USE WITH DIMMERS
- For cUL units, this retrofit kit is acceptable as a component of a luminaire where the suitability of the combination shall be determined by CSA or authorities having jurisdiction.

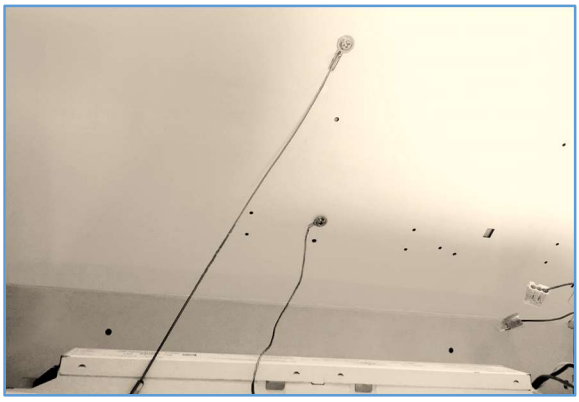

Remove existing components from host fixture.

Open and remove existing fixture's door or louver. Remove lamps and channel cover. Identify the power supply wires and unplug the existing Ballast Disconnect Plug (BDP).. Remove all lampholders, brackets, wire, and ancillary components. Remove any existing bracketry from previous relighting or retrofitting.

Host fixture housing should now be completely empty, except for the incoming power wiring.

**Step Two:**

**BLT4DR, 2BLT2DR, & 2BLT4DR kits** are supplied with hinges and latches that match-up to some existing Lithonia Lighting troffers, and therefore, **do not require the installation of adapter brackets**

Engage the t-clips on the Doorframe Assembly into the corresponding slots in the host fixture, and let the Doorframe Assembly hang.

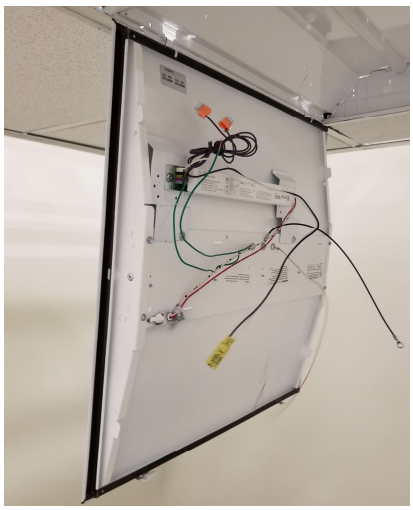

Connect the incoming power to the driver.

Securely attach the ground wire and security cable from you Doorframe Assembly to the host housing.

Close and latch the Doorframe Assemble, making sure that no wires are pinched or exposed.

**If your assembly is equipped with an optional FAO (Field Adjustable Output Module), then continue with Optional Step Four.**

**<u>Optional Step Four:</u>**

Set the FAO device to the desired output level.

Locate FAO on the back of the *Unitized Light Engine Assembly.*

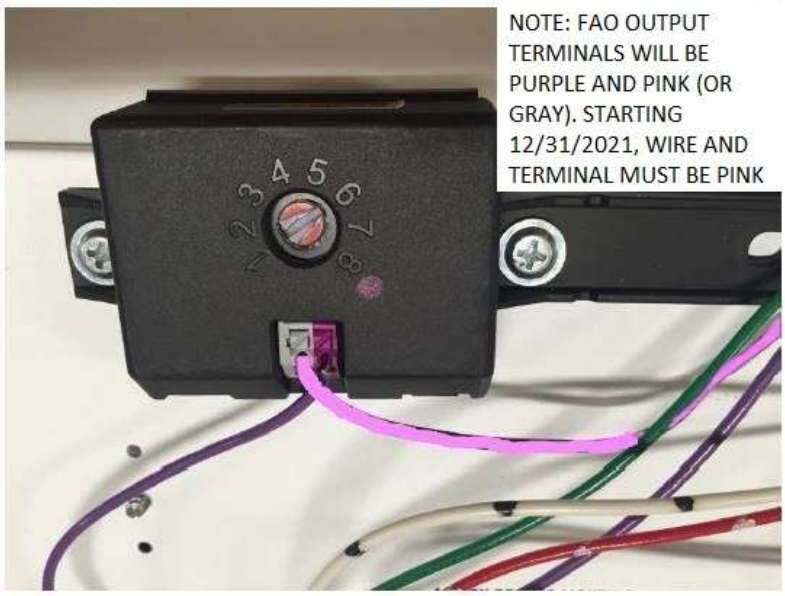


Use table below to choose desired output level. A flathead screwdriver may be used to rotate knob of FAO to desired output setting.

| | 0-10 Voltage Dimmer | % Lumen Output (approximate) | % Wattage (approximate) |
|---|---|---|---|
| Step 8 | Full Output | 100% | 100% |
| Step 7 | 9.0 VDC | 98% | 100% |
| Step 6 | 8.0 VDC | 88% | 86% |
| Step 5 | 7.0 VDC | 86% | 82% |
| Step 4 | 6.0 VDC | 82% | 80% |
| Step 3 | 5.0 VDC | 76% | 75% |
| Step 2 | 4.0 VDC | 71% | 72% |
| Step 1 | 3.0 VDC | 67% | 71% |

**FOR ANY QUESTIONS, PLEASE CONTACT 1-800-705-7378**

**Optional Step 5:**

Cleaning the outside of the diffuser can be accomplished with a soft cloth and water.

The diffuser does not require removal during normal operation, however, it is removable by following the instructions below.

Unlatch the *Unitized Light Engine Assembly and hinge it open to gain access to one end of the assembly.*

Remove the screw and disengage the Trim Ring by pushing inward on both locking pins. **Carefully** pull the Trim Ring down and away from the Diffuser, while holding the diffuser in place.

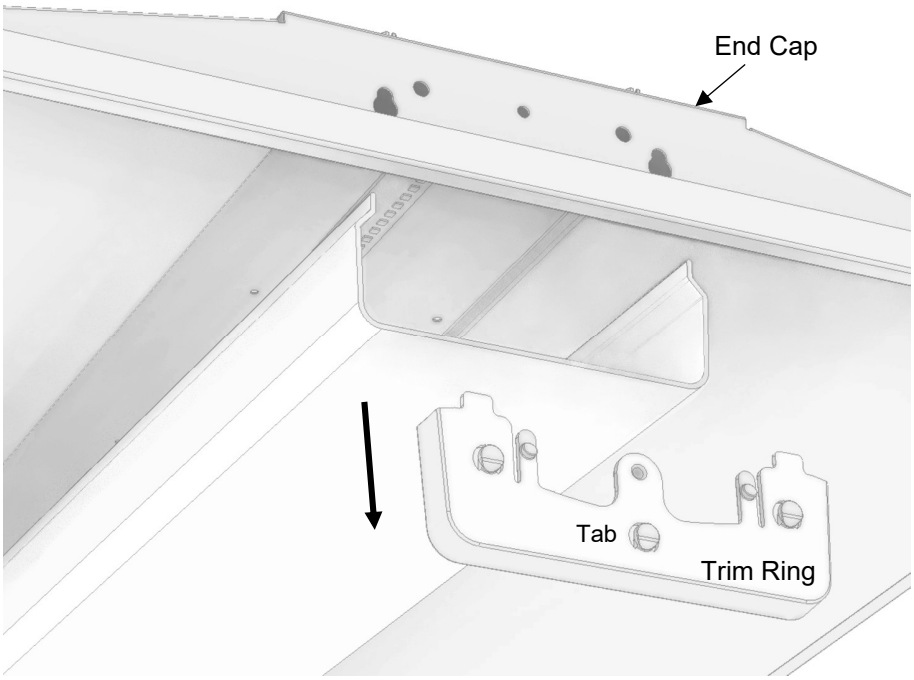


Grasp the side of the Diffuser near the end where the Trim Ring has been removed, and carefully pull it away from the assembly.

The other Trim Ring at the opposite end of the assembly should remain installed during any necessary maintenance.

To reinstall the Diffuser after maintenance, insert the Diffuser into the Trim Ring that remained in fixture.

Place the removed Trim Ring on the end of the Diffuser and lever it up into the assembly.

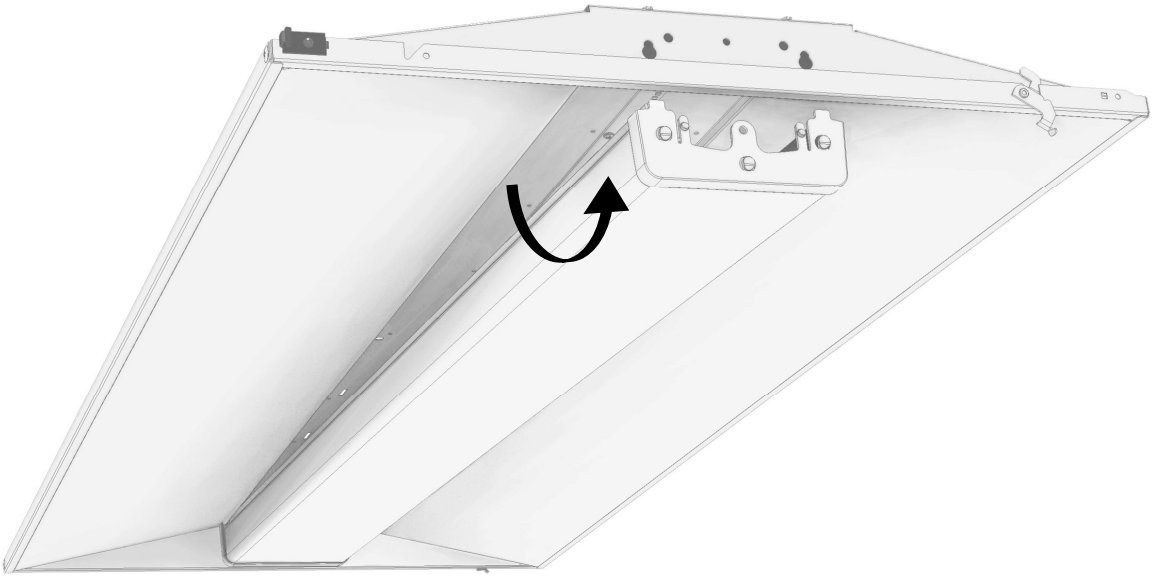

Push the Trim Ring against the end cap and align the tabs and keyholes. Push upwards until you hear a snap indicating that the Trim Ring locking Pins are engaged. Replace the locking screw.

***Help save our environment by recycling all remaining components.***

**<u>Save these instructions</u>**