Catalog Number:	Date:	Project:

OVERVIEW

The nWSXA series nLight wall switch occupancy sensor provides a simple control solution for a small room, in particular one utilizing nLight enabled digital luminaires. Capable of detecting small motion up to 20 ft (6.10 m), this sensor is perfect for private offices, private rest rooms, copy rooms, closets or any small enclosed space. Available as Passive Infrared (PIR), or PIR/Microphonics Dual Technology (PDT), this stylish sesnsor can be programmed locally, via the front push button(s), or remotely via the nLight software solutions. The nWSXA includes an integrated photocell (inhibit only – disabled by default).

FEATURES

- 100% digitial PIR detection, vandal resistant lens standard, includes screwless wall plate
- Push-button programmable, adjustable time delays, multiple operating modes
- Multiple nWSXA sensors or WallPods can be used in 3 way(or greater) configurations w/o traveler wires
- Photocell standard (inhibit only – disabled by default)
- Broadcasts occupancy, photocell, and switch information over a local and/or global nLight channel
- Remotely firmware upgradeable

CONTROL MODES

A control zone with an nWSXA can operate in several modes:

1. Auto On / Auto Off (i.e. Fully Automatic)
2. Manual On (initial state) to Override On (with expiration timer)
3. Auto On (initial state) to Override On (with expiration timer)
4. Manual On / Automatic Off (i.e. Semi-Automatic)
5. Manual On (initial state) to Fully Automatic
6. Predictive Off Switch (returns zone to auto-on unless person remained in room after an off switch press)

*See MLO operation chart on page 2.

CUSTOM BUTTON ENGRAVING

- Standard Button labeling is shown on back
- Custom lettering for units can be specified and ordered at nGrave Form
- To ensure color uniformity, ordering templates facilitate specifying all buttons on a unit as custom lettered. Replacing single buttons not recommended
- Buttons may ship separately and require field installations

Buy American

BAA variants of this product are assembled in the USA and meet the Buy America(n) government procurement requirements under FAR, DFARS and DOT. Please refer to www.acuitybrands.com/buy-american for additional information.

Warranty

Five-year limited warranty. This is the only warranty provided and no other statements in this specification sheet create any warranty of any kind. All other express and implied warranties are disclaimed. Complete warranty terms located at: www.acuitybrands.com/support/warranty/terms-and-conditions

Note: Actual performance may differ as a result of end-user environment and application.

Specifications subject to change without notice.

nWSXA

Low Voltage Wall Switch Sensor

nWSXA DX

Buy American

ORDERING INFORMATION

nWSXA												Example: nWSXA LV DX WH
Series		**Occupancy Detection**		**Voltage**		**Dimming**		**Color**				**Temp/Humidity**		**Buy America(n)[1 2]**	
nWSXA	Passive Infrared	[blank]	PIR Detection	LV	Low Voltage	[blank]	None	WH	White	AL	Lt. Almond	[blank]	Standard	[blank]	Standard
		PDT	Dual Tech - PIR/ Microphonics			DX	Raise/Lower dim control	IV	Ivory	BK	Black	LT	Low temp	BAA	Buy America(n) Act Compliant
								GY	Gray	RD	Red				

ACCESSORIES									
Series		**# of Gangs**		**Mounting**		**Color**				**Packaging**	
WS xPODA	Wall Plates (Standard)	1 GNG	Single Gang	[blank]	Standard	WH	White	BK [4]	Black	[blank]	Single Unit [7]
SSW [5]	Sealed Covers			OCC [6]	Occ. Wall Switch	IV	Ivory	RD	Red	M5 [4]	5 Pack
						GY [4]	Gray	VP [4]	Variety Pack	M6 [3]	6 Pack
						AL [4]	Lt. Almond				

All nWSXA switches are shipped with wall plates and mounting flanges (WS XPODA), however, the following order information is available to acquire replacement wall plates. Also compatible with the WALLP Series.

Notes:

1. Only available in WH.
2. Not available with LT option.
3. Only available for Variety Pack.
4. Not available for SSW Series.
5. Ships with custom screwless wall plate.
6. Only available with SSW series.
7. Single units only available with SSW series.

© 2020-2022 Acuity Brands Lighting, Inc. All rights reserved. Rev. 05/26/22

WALL SWITCH CLEANING

It will occasionally be necessary to clean the wall switches. All nWSXA switches may be wiped down with a soft cloth or paper towel dampened with glass cleaner, vinegar and water, hydrogen peroxide, or a mild abrasive. Spray a limited amount on the cloth or paper towel prior to applying. Do not spray cleaner on the switches directly, and do not wipe the switches down with a towel saturated (drips when wrung out) with cleaner.

If the ability to clean the switches using chemical spray disinfectants is desired, we recommend the use of the Sealed Screwless Wall Plate (SSW). The Sealed Screwless Wall Plate is a cover for the standard wall plate, designed with an IP54 rating. It consists of a transparent silicone rubber layer that covers the wall switch to prevent liquids from entering the wall switch while maintaining a tactile button feel. The Sealed Screwless Wall Plate is the ideal solution to help protect a wall switch from fluid entering the device while enabling the use of disinfectants recommended by the EPA for use against SARS-CoV-2, the coronavirus that causes COVID-19, which often require spraying or saturating the surface.

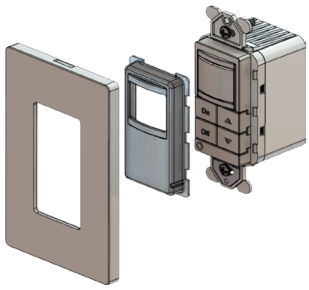

For more information on the Sealed Screwless Wall Plates

COVERAGE PATTERN*

- Small Motion (e.g. hand movements) detection up to 20 ft (6.10 m)
- Large motion (e.g. walking) detection greater than 36 ft (10.97 m)
- Wall to Wall Coverage
- Passive Dual Technology (Microphonics) provides overlapping detection of human activity over the complete PIR coverage area. Advanced filtering is utilized to prevent non-occupant noises from keeping the lights on.

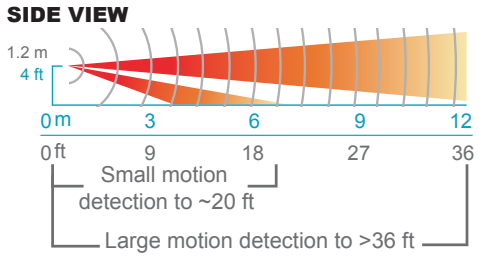

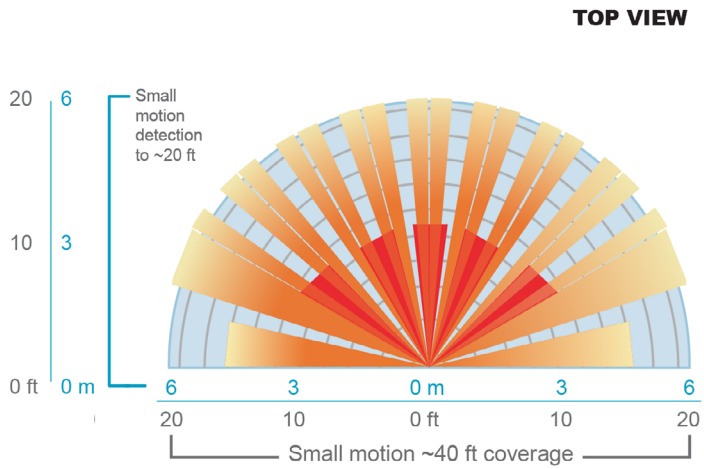

* Coverage pattern shown is derived from NEMA WD7 testing

TYPICAL WIRING DIAGRAMS

Sensor power is provided via the CAT-5e connection to an nLight power pack/supply, nLight enabled digital luminaire, or nLight Bridge. T568B pin/pair assignments is recommended for CAT-5e cables.

SINGLE LOAD SWITCHING

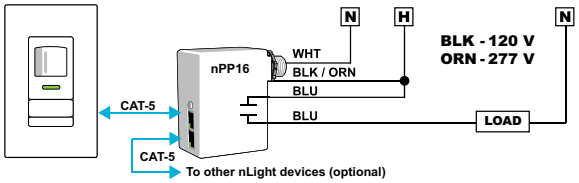

3-WAY SWITCHING AND DIMMING CONTROL

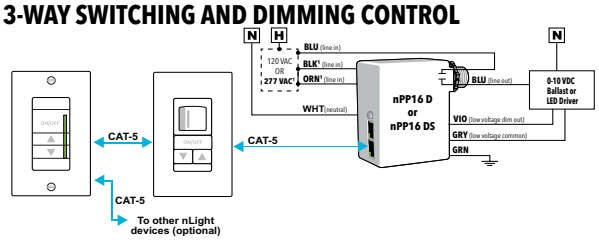

BI-LEVEL SWITCHING USING MULTI-LEVEL OPERATING MODE (MLO)

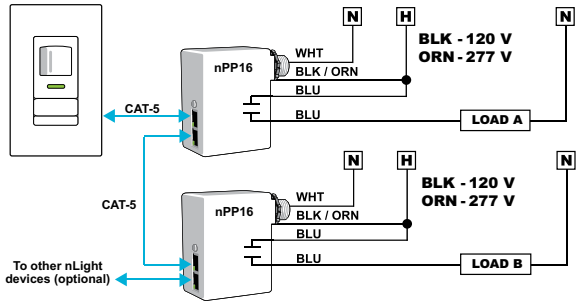

WIRING to nLIGHT ENABLED DIGITAL LUMINAIRE (e.g. RTLED)

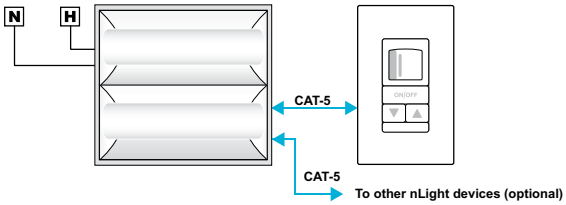

NOTES:
- nLight enabled fixture must have **nIO LEDG**/**nIO EZ PH** for standalone operation
- Luminaires with **nIO LEDG ER**/**nIO EZ PH ER** require bus power from another device
- Provides on/off and continuous raise/lower dimming operation by default. For bi-level operation only program **nWSXA** for Multi-Level Operating Mode (**MLO**)

© 2020-2022 Acuity Brands Lighting, Inc. All rights reserved. Rev. 05/26/22

MLO OPERATIONAL MODES

Additionally, an **nWSXA** can be set to function in Multi-Level Operating Mode (**MLO**) which enables the user to select from multiple on/off lighting states using just the unit's single on/off button. This mode is designed specifically for bi-level applications and eliminates user confusion created when wall stations have multiple buttons. Several different transition sequences are available in order to comply with energy codes or user preference. Depending on the sequence selected and initial lighting state, every subsequent button push steps through states according to below table. **MLO** sequences are also available that enable high/low or low/high step operation via any nLight dimming output.

	2 State (Bi-Level) Sequence		2 State - Alternating Sequence		3 State Sequence	
Button Press #	Load A	Load B	Load A	Load B	Load A	Load B
1	On	Off	On	Off	On	Off
2	On	On	Off	On	Off	On
3	Off	Off	Off	Off	On	On
4					Off	Off

nWSXA (PDT) LV – TN-408-01

INSTALLATION

- Mount WallPod using holes that align with standard single gang switch box or low voltage ring
- Access RJ-45 ports by sliding plastic guard up
- Insert CAT-5e cable(s), T568B wiring convention recommended
- Slide guard back onto metal strap
- Interconnect unit with other nLight devices in lighting zone using CAT-5e cables
- Once power is received via CAT-5e connection, all devices in zone will automatically begin functioning together according to respective device's defaults

Attention! Only use non-booted CAT5e cables.

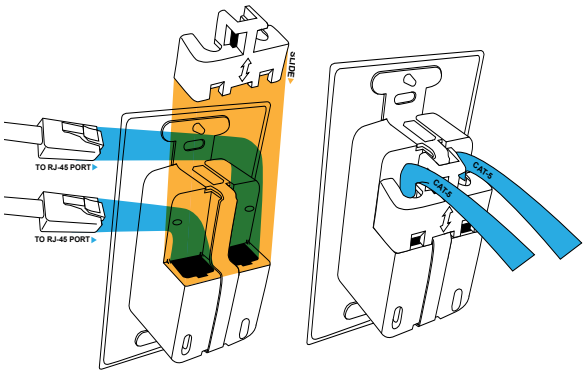

SPECIFICATIONS

Electrical	**Input Ratings**	15-24VDC, 3mA, Class 2 (nLight network power)
Mechanical	**Dimensions**	2.74"H x 1.68"W x 1.63"D (70mm x 43mm x 41mm) - does not include ground strap
	Mounting	Single-Gang Box or Low Voltage Ring
	Connection Type	RJ-45 nLight Network Ports (2)
Environmental	**Warrantied Operating Temperature**	32°F to 140°F (0°C to 60°C)
	Relative Humidity	Up to 90%, Non-Condensing
	Standards/ Ratings	Energy Management Equipment, UL916 (E167435) RoHS

nWSXA (PDT) LV – TN-408-01

© 2020-2022 Acuity Brands Lighting, Inc. All rights reserved. Rev. 05/26/22