JUNO

6" ECONOMY UNIVERSAL IC HOUSING

INCANDESCENT LAMPS

IC23 SERIES

Project: _____

Fixture Type: _____

Location: _____

Contact/Phone: _____

PRODUCT DESCRIPTION

IC Air-Loc® Housing • Energy efficient, sealed housing • Can be completely covered with insulation • When used with Air-Loc Gasket accessory or pre-installed gasket on mounting frame, stops infiltration and exfiltration of air, reducing heating and cooling costs • Trims shown with Air-Loc symbol AIR-LOC do not require a gasket.

PRODUCT SPECIFICATIONS

Lamp Lamp ratings based on trim selected – see page 2.

Socket Medium base porcelain with nickel-plated copper screw shell • Floating socket with spring attaches to trim for installation.

Trims Trim selection shown on page 2.

Labels UL listed for through-branch wiring, damp locations and IP • Product thermally protected against improper use of lamps • UL Listed/CSA certified • Trims 239 and 241 are wet location approved for covered ceiling applications • Trims 28, 29 are wet location approved for covered ceilings, **must be used with outdoor rated lamps**.

Testing All reports are based on published industry procedures; field performance may differ from laboratory performance.

Specifications subject to change without notice.

INSTALLATION

Real Nail® 3 Bar Hangers Telescoping, Patented (US Patent D552,969) Real Nail 3 system permits quick placement of housing anywhere within 24" O.C. joists or suspended ceilings • Integral T-bar notch and clip secures housing in suspended ceiling grid – no accessory clips required • 24" expansion stop allows quick placement of fixture in standard grid spacing • Bars scored in two locations for fast, clean breaking, allowing housing installation in tight applications • Bars captive to mounting frame • Edge-mounted for extra strength • Captive bugle-headed ring shank nail for quick one-step installation and easy removal with claw hammer for fixture relocation • Quick-Loc slot (location identified on the mounting frame) and oversized locking set screw lock fixture in position • Bar hanger foot contoured to align to bottom of construction joist • Alternate mounting holes included.

Junction Box Pre-wired junction box provided with (5) ½" and (1) ¾" knockouts, (4) Non-metallic sheathed cable connectors and ground wire, U.L. listed/CSA certified for through-branch wiring, maximum 8 No. 12 AWG 90° C branch circuit conductors (4 in, 4 out) • Junction box provided with removable access plates • Knockouts equipped with pryout slots • **W options** are supplied with **push-in electrical connectors** for fast installation.

Mounting Frame 22-gauge die-formed galvanized steel mounting frame • Rough-in section (junction box, mounting frame, housing and bar hangers) fully assembled for ease of installation • Sight lines embossed on mounting frame to allow for easy viewing when aligning fixtures • Pre-installed Air-Loc gasket for **G options**.

Housing IC housing, .032" aluminum sealed for Air-Loc Compliance • Housing is vertically adjustable to accommodate up to a 1" ceiling thickness.

DIMENSIONS

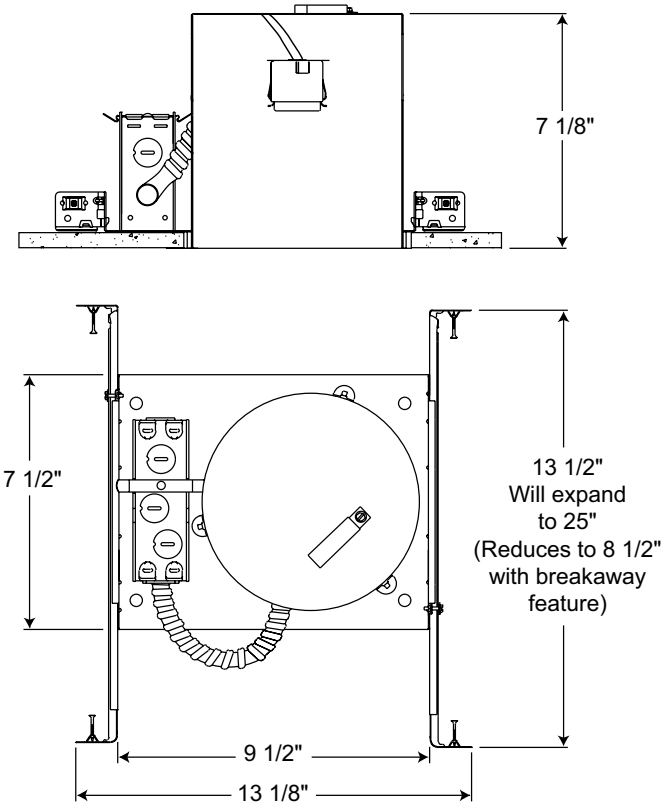

6 7/8" CEILING CUTOUT

Accessories

Catalog Number	Description
ALG6	Air-Loc Gasket

To order, specify catalog number.

PRODUCT CODES

Catalog Number		Input Voltage	Lamp Rating
IC23	6" Incandescent No Plate New Construction IC Housing	120V	A19/BR30/BR40/PAR16/PAR20/PAR30/PAR30L/PAR38/R20 (See page 2 for max. trim rating)
IC23 G	6" Incandescent No Plate New Construction IC Housing with pre-installed Air-Loc gasket	120V	A19/BR30/BR40/PAR16/PAR20/PAR30/PAR30L/PAR38/R20 (See page 2 for max. trim rating)
IC23 W	6" Incandescent No Plate New Construction IC Housing with push-in electrical connectors for fast, secure installation	120V	A19/BR30/BR40/PAR16/PAR20/PAR30/PAR30L/PAR38/R20 (See page 2 for max. trim rating)
IC23 W G	6" Incandescent No Plate New Construction IC Housing with push-in electrical connectors and pre-installed Air-Loc gasket	120V	A19/BR30/BR40/PAR16/PAR20/PAR30/PAR30L/PAR38/R20 (See page 2 for max. trim rating)

Housing and trim can be ordered together or separate, but will always ship separately.

 ©2017 Acuity Brands Lighting, Inc.

6" ECONOMY UNIVERSAL IC HOUSING

INCANDESCENT LAMPS

IC23 SERIES

TRIMS/LAMPS

	Catalog Number	Description	Max. Lamp Rating
AIR-LOC	**28 BWH ◆◆**	Black Baffle, White Trim Ring	60W A19, 65W BR30, †
	28 WWH ◆◆	White Baffle, White Trim Ring	75W PAR30/30L, 90W PAR38, 90W BR40
AIR-LOC	**29 CWH ◆◆**	Clear Cone, White Trim Ring	60W A19, 65W BR30, †
	29 WWH ◆◆	White Cone, White Trim Ring	75W PAR30/30L, 90W PAR38, 90W BR40
	230 CBWH	Clear with Black, Black Trim Ring	40W A19
	230 CWWH	Clear with White, White Trim Ring	
	232 CWH	Clear Alzak®, White Trim Ring	60W A19
	232 GWH	Gold Alzak®, White Trim Ring	
	232 WWH	White, White Trim Ring	
	232 HZWH	Haze, White Trim Ring	
	232 WHZWH	Wheat Haze, White Trim Ring	
	233 CWH	Clear Alzak®, White Trim Ring	40W A19
AIR-LOC **	**244S BWH**	Shallow Black Baffle, White Trim Ring	75W PAR30L, 65W BR30, 60W PAR30
	244S WWH	Shallow White Baffle, White Trim Ring	
AIR-LOC **	**247S CWH**	Shallow Clear Alzak® Cone, White Trim Ring	75W PAR30L, 65W BR30, 75W PAR30
	247S GWH	Shallow Gold Alzak® Cone, White Trim Ring	
	247S BWH	Shallow Black Alzak® Cone, White Trim Ring	
	247S HZWH	Shallow Haze Cone, White Trim Ring	
	247S WHZWH	Shallow Wheat Haze Cone, White Trim Ring	
	250 WH	Open Frame, White	65W BR30
	250 SC	Open Frame, Satin Chrome	
	250 ABZ	Open Frame, Classic Aged Bronze	
	226 BWH	Cylinder Spotlight, Black Baffle, White Trim Ring	60W PAR16
	226 WWH	Cylinder Spotlight, White Baffle, White Trim Ring	
	228 WH	Regressed Eyeball, White	50W PAR20/R20
	229 WH	Regressed Eyeball, White	75W PAR30L, 65W BR30
	229 SC	Regressed Eyeball, Satin Chrome	
	229 ABZ	Regressed Eyeball, Classic Aged Bronze	
	229 BL	Regressed Eyeball, Black	
	248 WWH	Regressed Eyeball, White Baffle, White Trim Ring	50W PAR20/R20
	249 BWH	Regressed Eyeball, Black Baffle, White Trim Ring	75W PAR30L, 65W BR30
	249 WWH	Regressed Eyeball, White Baffle, White Trim Ring	
**	**264 BWH**	Adjustable, Black Baffle, White Trim Ring	50W PAR30
	264 WWH	Adjustable, White Baffle, White Trim Ring	
**	**267 CWH**	Clear Alzak® Cone, White Trim Ring	50W PAR30
	267 GWH	Gold Alzak® Cone, White Trim Ring	
	267 BWH	Black Alzak® Cone, Whit Trim Ring	
	267 HZWH	Haze Cone, White Trim Ring	
	267 WHZWH	Wheat Haze Cone, White Trim Ring	
AIR-LOC	**241 WH ◆**	Drop Opal w/Reflector, White	40W A19
	241 PW ◆	Drop Opal w/Reflector, Plastic White	
AIR-LOC	**239 WH ◆**	Frosted Lens, White	35W PAR30L
	261 BWH	Wall Wash Scoop Trim, Black Baffle, White Trim Ring	40W A19
	261 WWH	Wall Wash Scoop Trim, White Baffle, White Trim Ring	

Trim Size: 7⅝" O.D. (except Cat. Nos. 228, 229, 241).
Alzak is a registered trademark of Alcoa Corp.
Note: In Canada when insulation is present, Type IC fixtures must be used.

AIR-LOC JUNO IC housings meet IECC Energy Code requirements per ASTM E283.

Air-Loc® rated trims are pre-gasketed for minimum air leakage with IC housings.

† Suitable for wet locations, ceiling mount only when used with 75W PAR30 or 90W PAR38 OUTDOOR RATED LAMPS.

◆ Wet location approved for covered ceiling applications.

** NOTE: TR6 Trim Ring compatible with 244S, 247S, 264, 267 trims.

Housing and trim can be ordered together or separate, but will always ship separately.

 ©2017 Acuity Brands Lighting, Inc.