LITHONIA LIGHTING®

Catalog Number	
Notes	
Type	

FEATURES & SPECIFICATIONS

INTENDED USE — Provides a minimum of 90 minutes illumination for the rated wattage upon loss of AC power to meet and exceed code required emergency lighting. Ideal for applications requiring attractive LED unit equipment with quick installation and unparalleled performance for mounting heights from 7.5′ to 30′. **Certain airborne contaminants can diminish the integrity of acrylic and/or polycarbonate.**
Click here for Acrylic-Polycarbonate Compatibility table for suitable uses.

CONSTRUCTION — The housing is a standard white (black optional) thermoplastic with a compact and low-profile contemporary design. It is 5VA flame rated, impact-resistant, scratch-resistant and corrosion proof. The UV-stable resin resists discoloration from natural and man-made light sources. There is a low-profile, integrated and back-lit test switch with an easily visible multi-color LED status indicator. The back-plate contains a universal j-box mounting pattern to facilitate ease of installation on a wide variety of j-boxes and the front housing allows tool-less access for ease of maintenance.

The lamp heads have a unique track-and-swivel arrangement permitting full range of direction of optical aiming.

OPTICS — The ELM4L features two high-performance LEDs rated at 3.3 watts per lamp head and delivers a total of 640 lumens in a spot pattern (SP640L).

The ELM6L features three high-performance LEDs rated at 5.3 watts per lamp head and delivers a total of 1,100 lumens in a spot pattern (SP1100L).

The typical life of an LED is 10 years. The LED light sources typically never need to be replaced under normal conditions for normal off applications.

CCT: 5000K

ELECTRICAL — Orderable in multiple voltages (see ordering tree for specific voltages.)

Current-limiting charger maximizes battery life and minimizes energy consumption to provide low operating costs. Small battery chargers Certified in the CA Title 20 Appliance Efficiency Database.

Short-circuit protection — current-limiting charger circuitry protects printed circuit board from shorts.

Regulated charge voltage maintains a stable charge voltage over a wide range of line voltages.

Prevents over/undercharging that shortens battery life and reduces capacity. Filtered charger input minimizes charge voltage ripple and extends battery life.

BATTERY: Sealed, maintenance-free nickel-cadmium (ELM4L only) or Lithium Iron Phosphate battery. Optional High-Output (HO option) and Extra High Output (EHO option), LTP battery type only, provides a wide variety of remote capacities and/or extended run-times.

Automatic 24-hour recharge after a 90-minute discharge.

Advanced electrical design provides constant light output throughout the entire discharge period.

Brownout protection is automatically switched to emergency mode when supply voltage drops below approximately 80 percent nominal of 120, 220, 277 or 347. Other input voltages may vary.

AC/LVD reset allows battery connection before AC power is applied and prevents battery damage from deep discharge.

Self-Diagnostics: Continuously monitors AC functionality. Test switch and remote tester (RTKIT accessory) provide manual activation of 30-second diagnostic testing for on-demand visual inspection. Standard derangement monitoring will indicate disconnected battery, charger failure and displays green flashing indicator light while in emergency mode. Single multi-chromatic LED indicator to display two-state charging, test activation and three-state self-diagnostics.

SELF-DIAGNOSTICS and REMOTE TEST (SDRT and AELR option):

Self-diagnostic testing: Five minutes every 30 days and 90 minutes annually. Diagnostic evaluation of lamps, AC to DC transfer, battery charging and condition of microprocessor. Automatic test is easily postponed for eight hours by activating manual test switch or use of remote tester (RTKIT accessory).

AELR option: STAR (Self-testing Automated Reporting) radio transmits monthly and annual test results and diagnostics information for automated reporting requirements.
For more information visit AcuityBrands.com/STAR

INSTALLATION — Wall and ceiling mount standard. Blind-mate connector ensures easy installation and safe maintenance. 7/8" entrance provision at top of unit for standard 1/2" conduit entry. Tool-less removal of front cover from back-plate for ease of installation and maintenance.

LISTINGS — UL damp location listed standard and wet location listed when used with the WPVS accessory, all at 50-104°F (10-40°C). Meets or exceeds all applicable requirements for UL 924, NFPA 101 (current Life Safety code), NFPA 70 (NEC), NOM (Norma Oficial Mexicana), California Energy Commission Title 20 section 1605.3 (W)(4), FCC Title 47, Part 15, Subpart B and OSHA. List and labeled to comply with Canadian Standards C22.2 No. 141-10.

BUY AMERICAN ACT — Product with the BAA option is assembled in the USA and meets the Buy America(n) government procurement requirements under FAR, DFARS and DOT regulations.
Please refer to www.acuitybrands.com/buy-american for additional information.

WARRANTY — 5-year limited warranty. This is the only warranty provided and no other statements in this specification sheet create any warranty of any kind. All other express and implied warranties are disclaimed.
Complete warranty terms located at: www.acuitybrands.com/support/warranty/terms-and-conditions

NOTE: Actual performance may differ as a result of end-user environment and application.
All values are design or typical values, measured under laboratory conditions at 25 °C.
Specifications subject to change without notice.

† Small Battery Chargers Certified in the CA Title 20 Appliance Efficiency Database.

star SELF-TESTING AUTOMATED REPORTING QUANTUM®

Contemporary Commercial LED Emergency Light

ELM4L
640 Lumens

ELM6L
1100 Lumens

LITHIUM IRON PHOSPHATE
NICKEL CADMIUM

MOUNTING

All dimensions are inches (centimeters) unless otherwise indicated.

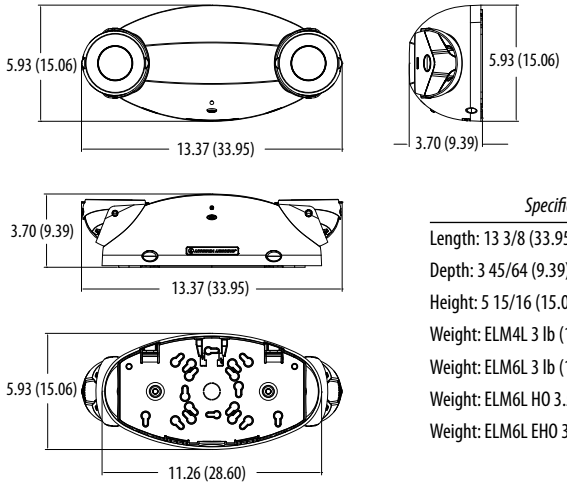

Specifications

Length: 13 3/8 (33.95)
Depth: 3 45/64 (9.39)
Height: 5 15/16 (15.06)
Weight: ELM4L 3 lb (1.4kg)
Weight: ELM6L 3 lb (1.4kg)
Weight: ELM6L HO 3.5 lbs (1.59 kg)
Weight: ELM6L EHO 3.75 lbs (1.7 kg)

Looking for Contractor Select readily available configurations? Click here to visit Contractor Select™ spec sheet or go to www.contractorselect.com

NICKEL CADMIUM BATTERY MODELS

ORDERING INFORMATION For shortest lead times, configure product using **bolded options.**

Example: ELM4L

Series	Lamp Type	Housing Color	Voltage	Battery Type	Automatic Testing	Options
ELM4L[1] 640 lumens, adjustable optics	**(blank)** SP640L 640 lumen, 6.6 watt, Spot Pattern, two lamp	**(blank)** White B Black	**(blank)** 120-277 VAC, 50/60Hz **UVOLT** 120 - 347 VAC, 50/60Hz	**(blank)** Nicad	**(blank)** None	**(blank)** none WPVS Wet protective vandal shield[2] BAA Buy America(n) Act Compliant PM Pendant Mount[3]

Notes

1 Does not support remote loads.

2 Must be ordered when using for wet location applications.. WPVS breaks out and ships separately and color will match (ex: WPVS LRG B). Decreases delivered lumens up to 20%. See spec sheet WPVS for more information.

3 Pendant mount option will include a 12" long 3/8-16 UNC threaded rod and hardware. Not available with any other lengths.

LITHIUM IRON PHOSPHATE BATTERY MODELS

ORDERING INFORMATION For shortest lead times, configure product using **bolded options.**

Example: ELM6L UVOLT LTP SDRT

Series[1]	Lamp Type	Housing Color	Voltage	Battery Type	Automatic Testing	Options
ELM4L 640 lumens, adjustable optics	**(blank)** SP640L 640 lumen, 6.6 watt, Spot Pattern, two lamp	**(blank)** White B Black	**UVOLT** 120 - 347 VAC, 50/60Hz	**LTP** Lithium Iron Phosphate	**(blank)** none[2] SDRT Self-diagnostics, remote test AELR Automated Emergency Lighting Reporting[3]	LLH Less lamp heads[4] HO High-output battery EHO Extra High-output battery WPVS Wet protective vandal shield[5] BAA Buy America(n) Act Compliant PM Pendant mount[6]
ELM6L 1100 lumens, adjustable optics	**(blank)** SP1100L 1100 lumen, 10.6 watt, Spot Pattern, two lamp					

Other Accessories: *Order as separate catalog number.*	
WPVS LRG W	Wet protective vandal shield, white (must be used for wet location applications)
WPVS LRG B	Wet protective vandal shield, black (must be used for wet location applications)
ELA WG1	Wireguard, 13 3/4"H x 15 1/4"W x 6"D (see spec sheet ELA-WG).
RTKIT	Remote test kit, up to 40' away (includes goggles, laser and battery)

ELM4L-ELM6L mounted inside the WPVS

Notes

1 Extended run-time or remote capacity is standard. New ELMRE and ELMRW style remotes are compatible with both SDRT and non-SDRT versions (see page 4).

2 Only available with ELM4L.

3 SDRT option required. AELR radio transmits monthly and annual test results and diagnostics information for automated reporting requirements. Only available with LTP battery type. Not available with BAA option.

4 ELM4L with LLH (less lamp heads) not available with SDRT. ELM6L with LLH only available with SDRT.

5 Must be ordered when using for wet location applications. WPVS breaks out and ships separately and color will match (ex: WPVS LRG B). Decreases delivered lumens up to 20%. See spec sheet WPVS for more information.

6 Pendant mount option will include a 12" long 3/8-16 UNC threaded rod and hardware. Not available with any other lengths.

© 2018-2022 Acuity Brands Lighting, Inc. All rights reserved.

SPACING GUIDELINES

*Note: To see complete photometric report or download the .ies file for this product, visit Lithonia Lighting ELM4L and ELM6L home page.

Maximum Spacing Guidelines — ELM4L [1]

Mounting Height	Illumination Level	Single Luminaire		Multiple Luminaire		Application Notes
		3' Path of Egress	6' Path of Egress	3' Path of Egress	6' Path of Egress	
7.5'	1FC Avg [1]	62'	58'	67'	60'	100'Corridor, 8' wide, and 12' high with 80/50/20 reflectances
10'	1FC Avg [1]	62'	58'	67'	60'	
7.5'	1FC Avg [1]	52'	40'	66'	58'	Retail open area: 200' X 15' X 30' with 80/50/20 reflectances
10'	1FC Avg [1]	52'	48'	64'	60'	
12'	1FC Avg [1]	52'	48'	62'	59'	
16'	1FC Avg [1]	52'	44'	61'	58'	
20'	1FC Avg [1]	44'	42'	60'	58'	
24'	1FC Avg [1]	34'	34'	42'	58'	

Maximum Spacing Guidelines — ELM6L [1]

Mounting Height	Illumination Level	Single Luminaire		Multiple Luminaire		Application Notes
		3' Path of Egress	6' Path of Egress	3' Path of Egress	6' Path of Egress	
7.5'	1FC Avg [1]	76'	74'	98'	90'	100' Corridor, 8' wide, and 12' high with 80/50/20 reflectances
10'	1FC Avg [1]	76'	74'	98'	88'	
7.5'	1FC Avg [1]	60'	48'	77'	68'	Retail open area: 200' X 15' X 30' with 80/50/20 reflectances
10'	1FC Avg [1]	78'	56'	85'	82'	
12'	1FC Avg [1]	68'	66'	77'	74'	
16'	1FC Avg [1]	72'	68'	72'	74'	
20'	1FC Avg [1]	66'	64'	70'	68'	
24'	1FC Avg [1]	66'	56'	65'	62'	

Notes:
1. Also meets the additional illumination requirements of NFPA 101: 1FC minimum and max/min ration of 40:1.

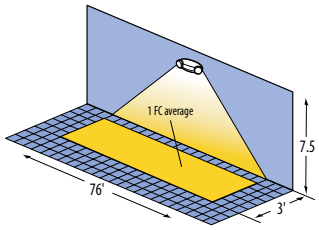

Example of single ELM6L illuminating a 3' path of egress

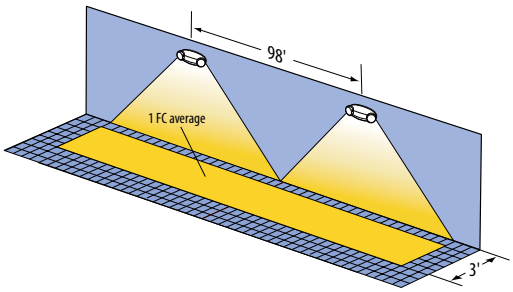

Example of multiple ELM6L units illuminating a 3' path of egress

© 2018-2022 Acuity Brands Lighting, Inc. All rights reserved.

REMOTES

BATTERY CAPACITY AND LOADING					
Battery Option (LTP Only)	**Battery Voltage**	**Total Capacity 90 Minutes**	**LP220L (1.2 Watts each) Maximum # Remote Lamps[1]**	**SP640L (3.3 Watts each) Maximum # Remote Lamps[1]**	**SP1100L (5.3 Watts each) Maximum # Remote Lamps[1,2]**
ELM4L LLH LTP	9.6V	11 watts	9	3	2
ELM4L LLH HO	9.6V	22 watts	18	6	4
ELM4L LLH EHO	12.8V	32 watts	26	9	6
ELM4L LTP	9.6V	11 watts	3	1	0
ELM4L LTP HO	9.6V	22 watts	12	4	2
ELM4L LTP EHO	12.8V	32 watts	21	7	6
ELM6L LTP	9.6V	11 watts	0	0	0
ELM6L LTP HO	9.6V	22 watts	9	3	2
ELM6L LTP EHO	12.8V	32 watts	17	6	4
ELM6L LLH LTP	9.6V	11 watts	9	3	2
ELM6L LLH LTP HO	9.6V	22 watts	18	6	4
ELM6L LLH LTP EHO	12.8V	32 watts	26	9	6

Notes
1 These are in addition to the lamp heads on the product.
2 ELMRW not available with SP1100L lamp type. For SP1100L wet location applications, order ELMRE with WPVS.

ELMRE Compatible Remotes[1,2]

LTP Compatible Remote Accessories: *Order as separate catalog number.*	
ELMRE LP220L SGL [1,2]	Single LED Indoor remote head, white.
ELMRE LP220L T [1,2]	Twin LED Indoor remote heads, white.
ELMRE SP640L SGL [1,2]	Single LED Indoor remote head, white.
ELMRE SP640L T [1,2]	Twin LED Indoor remote heads, white.
ELMRE SP1100L SGL [1,2]	Single LED Indoor remote head, white.
ELMRE SP1100L T [1,2]	Twin LED Indoor remote heads, white.
ELMRW LP220L DDBTXD SGL [1,3]	Single LED Wet Location remote head, dark bronze, 110 lumens
ELMRW LP220L DDBTXD T [1,3]	Twin LED Wet Location remote heads, dark bronze, 220 lumens
ELMRW SP640L DDBTXD SGL [1,3]	Single LED Wet Location remote head, dark bronze, 320 lumens
ELMRW SP640L DDBTXD T [1,3]	Twin LED Wet Location remote heads, dark bronze, 640 lumens

Notes
1 Compatible with SDRT and non-SDRT versions.
2 Order the WPVS accessory for wet location listing and vandal protection.
3 See ELMRW Spec sheet for color options. Available in aluminum glossy, white glossy, black glossy, and dark bronze textured.

ELMRE LP220L SGL

ELMRE LP220L T

ELMRE SP640L SGL

ELMRE SP640L T

ELMRE SP100L SGL

ELMRE SP1100L T

ELMRW LP220L DDBTXD SGL

ELMRW LP220L DDBTXD T

ELMRW SP640L DDBTXD SGL

ELMRW SP640L DDBTXD T

© 2018-2022 Acuity Brands Lighting, Inc. All rights reserved.

SPECIFICATIONS

ELECTRICAL			
Primary Circuit			
Type	**Volts**	**Input amps**	**Watts**
Nicad	120	0.032	3.15
	347	0.036	3.15
Lithium Iron Phosphate (SDRT)	120	0.028	2.78
	347	0.033	2.78
Lithium Iron Phosphate (HO option)	120	0.046	4.77
	347	0.046	4.77
Lithium Iron Phosphate (EHO option)	120	0.052	5.95
	347	0.045	5.95

BATTERY CAPACITY FOR EXTENDED RUN-TIMES				
Battery Option	**Total Capacity 2 hours**	**Remote Capacity 2 hours***	**Total Capacity 4 hours**	**Remote Capacity 4 hours***
ELM4L - LTP	8.25 watts	NA	NA	NA
ELM4L - HO	16.5 watts	9.9 watts	8.25 watts	NA
ELM4L EHO	24 watts	17.4 watts	12 watts	5.4 watts
ELM6L - LTP	8.25 watts**	8.25 watts**	NA	NA
ELM6L HO	16.5 watts	5.9 watts	8.25 watts**	8.25 watts**
ELM6L EHO	24 watts	13.4 watts	12 watts	12 watts**

* Remote capacity left after using standard lamps shipped mounted on luminiare. ELM4L standard high performance LED lamp heads are rated at 3.3 watts each, delivering a total of 640 lumens. ELM6L standard high performance LED lamp heads are rated at 5.3 watts each, delivering a total of 1,100 lumens. These lamps are different in both wattage and performance from the LT24 compatible remotes.

** LLH option only

BATTERY			
Nicad (6V)			
Typical Shelf life[1]	**Typical life[1]**	**Maintenance[2]**	**Temperature range[3,4]**
3 years	6-8 years	none	50-104°F (10-40°C)
Lithium Iron Phosphate (standard and HO option) (9.6V)			
Typical Shelf life[1]	**Typical life[1]**	**Maintenance[2]**	**Temperature range[3,4]**
1 year	6-8 years	none	50-104°F (10-40°C)
Lithium Iron Phosphate (EHO option) (12.8V)			
Typical Shelf life[1]	**Typical life[1]**	**Maintenance[2]**	**Temperature range[3,4]**
1 year	6-8 years	none	50-104°F (10-40°C)

Notes

1 At 77°F ambient temperature, charge/discharge cycles and prolonged full discharge may reduce useful life.

2 All life safety equipment, including emergency lighting for path of egress must be tested in accordance with all National Fire Protection Association (NFPA) and local codes. Failure to perform the required testing could jeopardize the safety of occupants and will void all warranties.

3 Temperature range where unit will provide capacity for 90 minutes. Higher and lower temperatures affect life and capacity.

4 Battery life is negatively impacted by many variables including temperature, charging rates, number of cycles and deep discharges due to long periods of time without AC power.

© 2018-2022 Acuity Brands Lighting, Inc. All rights reserved.