OVERVIEW

The nLight Relay Panel family delivers cost-effective 0-10V dimming and switching for your building design needs. The panel communicates with an nLight network and supports up to 128 digital devices per nLight control zone. Offering a full range of panel sizes, the nLight Relay Panel is ideal for spaces that require full circuit control, with the optional flexibility of configuring single pole relays into a two or three-pole relays in the field.

Also included on each panel is a programmable input that can be connected to a photocell, for example, and a separate dry contact "alarm" input that overrides all relays until the contact is released.

nLIGHT OPERATION

The nLight Relay Panel is nLight-enabled, meaning it has the ability to communicate over an nLight network. When daisy-chain wired with other nLight-enabled sensors, power packs, or WallPods™ using CAT-5e cabling, an nLight control zone is created. Connecting the panel to an nLight network backbone and nLight® ECLYPSE™ system controller enables time-based control, remote programming and monitoring from SensorView™ software, and BMS integration capabilities.

The digital time clock (DTC) option allows for on-screen configuration and control of connected devices, while introducing scheduling to standalone panel. When connected to nLight backbone and nLight ECLYPSE system controllers the panels relinquish all time clock functionality.

FEATURES

- Communicates with an nLight network
- Up to 128 digital devices per nLight control zone - each nLight Relay Panel utilizes 9 device addresses per 8 relays/dimming outputs:
  - 1 address per relay/dimming output
  - 1 address for the programmable input
- All relays include local manual override lever
- All relays are individually programmable
- One 0-10V dimming output per relay
- Create and control up to 32 schedules – Normal & Holiday (DTC version)
- Astronomical Timeclock feature enables +/- Sunset or Sunrise settings and programmable Latitude/ Longitude (DTC version)
- Programmable "dry contact/pull high" input (with provided 24VDC source)
  - Input is programmable to preset/profile scene, photosensor signal, wallpod toggle (maintain or momentary)
- Contact input for "alarm" override (requires maintain contact signal)
- All relays communicate with switch/occupancy/photocell channel 1 out of the box (programmable through SensorView)
- FCR type relays capable of being field configured to 2 and 3-pole relay configurations with included hardware:
  - 4/8 Relay Panel: 2x2-Pole and 1x3-Pole Hardware Included
  - 12/16 Relay Panel: 4x2-Pole and 2x3-Pole Hardware Included
  - 24/32/48 Relay Panel: 6x2-Pole and 3x3-Pole Hardware Included
- Supplies auxiliary 24VDC power and nLight network bus power (40mA per RJ45 port)
- Removable back plate for ease of installation
- UL 924 panel listing for Switching Emergency Circuits
- Optional field installed voltage barrier(s) for normal/emergency use, or mixed voltage use
- Remotely Configurable/Upgradeable

Buy American Act
This product is assembled in the USA and meets the Buy America(n) government procurement requirements under FAR, DFARS and DOT regulations.
Please refer to www.acuitybrands.com/resources/ buy-american for additional information.

Warranty
Five-year limited warranty. This is the only warranty provided and no other statements in this specification sheet create any warranty of any kind. All other express and implied warranties are disclaimed. Complete warranty terms located at: www.acuitybrands.com/support/warranty/terms-and-conditions

Note: Actual performance may differ as a result of end-user environment and application.
Specifications subject to change without notice.

Relay Panel

© 2016-2023 Acuity Brands Lighting, Inc. All rights reserved. Rev. 04/13/23

ORDERING INFORMATION

nLight RELAY PANEL — **Example: ARP INTENC08 NLT 8FCR MVOLT SC SM**

Panel Size		Relay Quantity				Operating Voltage	
ARP INTENC08 NLT	8-Relay Enclosure	4FCR[1]	4-Field Configurable Relays	16FCR[2]	16-Field Configurable Relays	MVOLT	120-277VAC
ARP INTENC16 NLT	16-Relay Enclosure	8FCR[1]	8-Field Configurable Relays	24FCR[3]	24-Field Configurable Relays	CNDV	120-277, 347VAC
ARP INTENC32 NLT	32-Relay Enclosure	12FCR[2]	12-Field Configurable Relays	32FCR[3]	32-Field Configurable Relays		
ARP INTENC48 NLT	48-Relay Enclosure			48FCR[4]	48-Field Configurable Relays		

Voltage Barrier		Door Type		Mounting		Clock Option	
[blank]	No barriers	SC	Screw Cover	SM[6]	Surface Mount	[blank]	No Clock
1VB	1 Voltage Barrier	HLK[6]	Hinge Locking	FM	Flush Mount	DTC	Digital Time Clock
2VB	2 Voltage Barriers						
3VB[5]	3 Voltage Barriers						
4VB[5]	4 Voltage Barriers						

NOTE: If desired, panel enclosure and interior components can be ordered separately (typically for panel enclosure rough-in prior to final wiring and system programming). Contact your Acuity representative for ordering tree information.

1. Only available in 8-Relay Enclosure.
2. Only available in 16-Relay Enclosure.
3. Only available in 32-Relay Enclosure.
4. Only available in 48-Relay Enclosure.
5. Only available in 32 or 48-Relay Enclosure Options.
6. 32/48 Enclosures only available in hinge locking surface mount.

Photosensor Accessories: *Order as separate catalog number.*

Series	Description	Recommended Application
ARPA PC	Simple switching (at ~1-3fc) with mechanically adjustable slide	Outdoor dusk to dawn, On/Off only
ARPA APS OL	Analog sensor (0-100FC) with switching/dimming thresholds remotely adjustable (via SensorView)	Outdoor dusk to dawn lighting, On/Off or On/Off/Dimming (where necessary)

Additional Accessories: *Order as separate catalog number.*

Series	Description
ARP DTC BRKT	Hardware to field install nDTC into nLight relay panel (ARP). nDTC ordered separately
ARP FCR CONFIG HARDWARE BAG	Extra set of hardware to create 2 and 3-pole relays in the field (2x 2-pole relays, 1x 3-pole relay)
ARPA FCR40	Replacement FCR40 Relay
ARP BARRIER REPLACEMENT KIT	Additional voltage barrier for 4/8/12/16 relay panels
ARP32-48 VOLTAGE BARRIER	Additional voltage barrier for 24/32/48 relay panels

© 2016-2023 Acuity Brands Lighting, Inc. All rights reserved. Rev. 04/13/23

WIRING - SINGLE-POLE

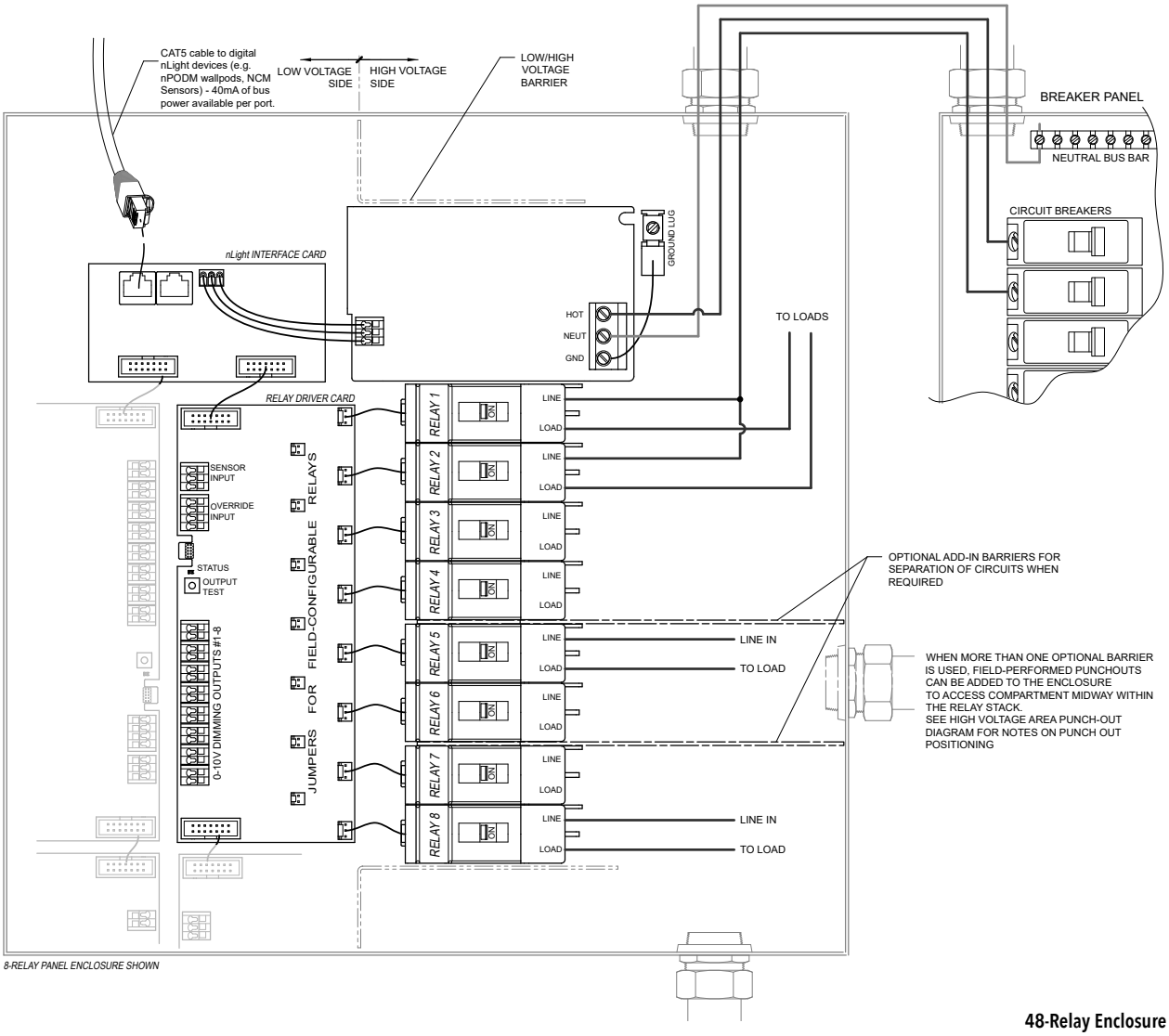

8-RELAY PANEL ENCLOSURE SHOWN

8-Relay Enclosure

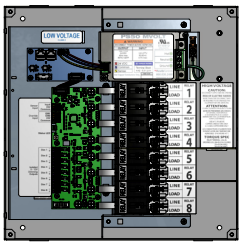

16-Relay Enclosure

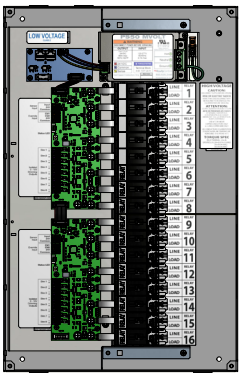

Dead-Front removed
Shown with optional Circuit Separation Barrier

32-Relay Enclosure

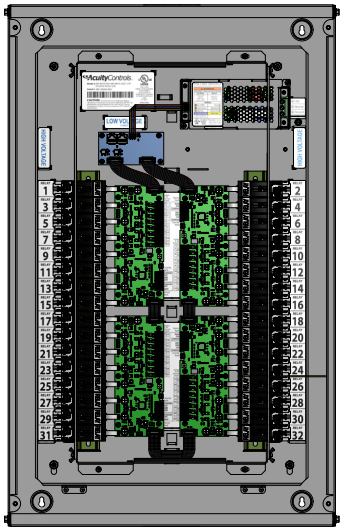

48-Relay Enclosure

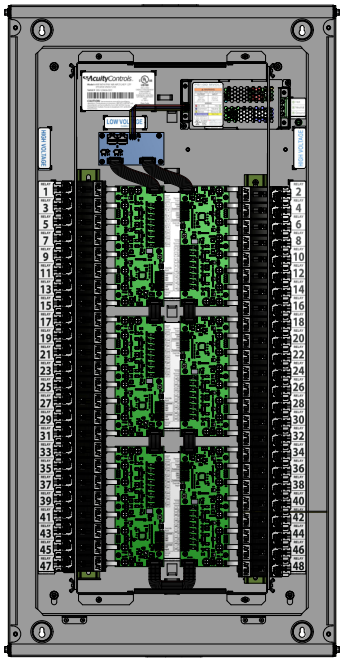

© 2016-2023 Acuity Brands Lighting, Inc. All rights reserved. Rev. 04/13/23

ARP NLT 8FCR w/ 2-POLE SCENARIO

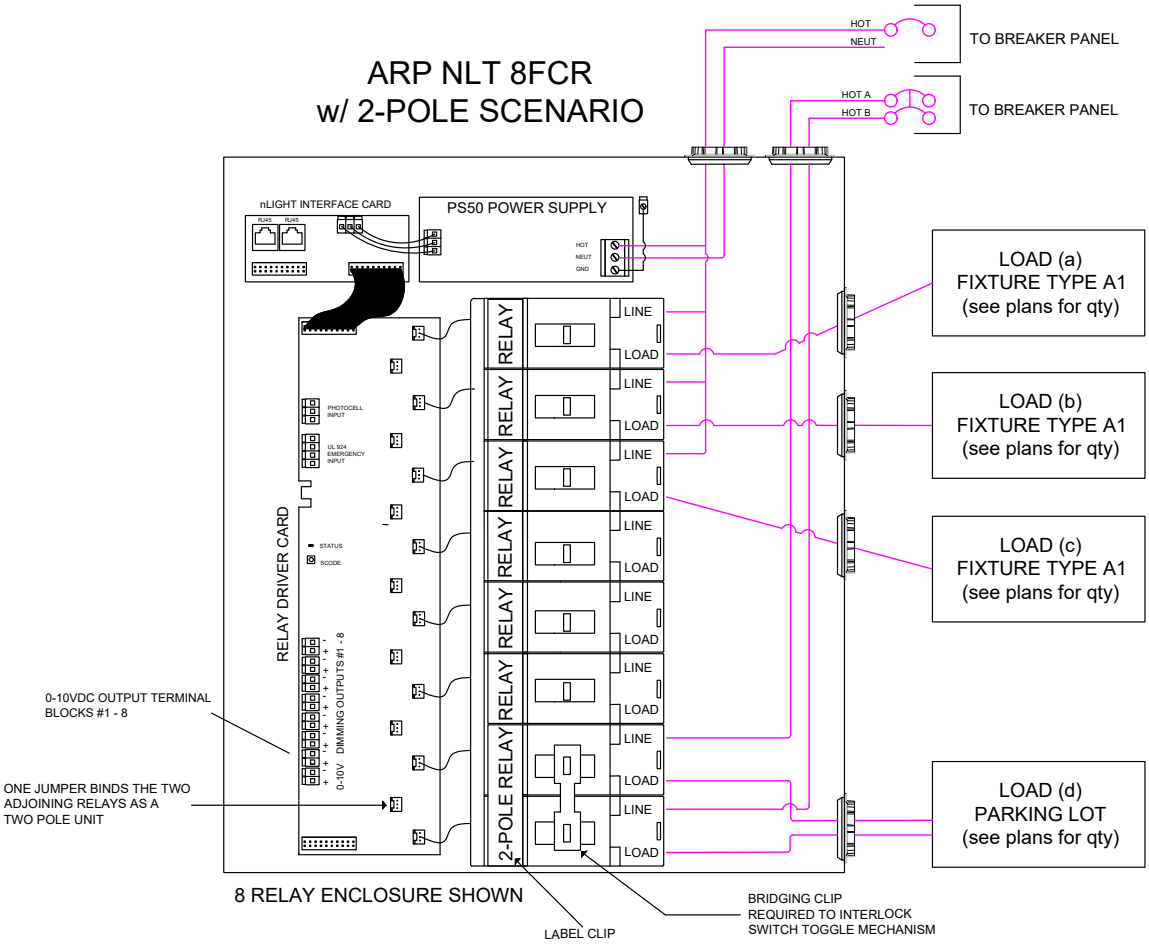

ARP NLT 8FCR w/ 3-POLE SCENARIO

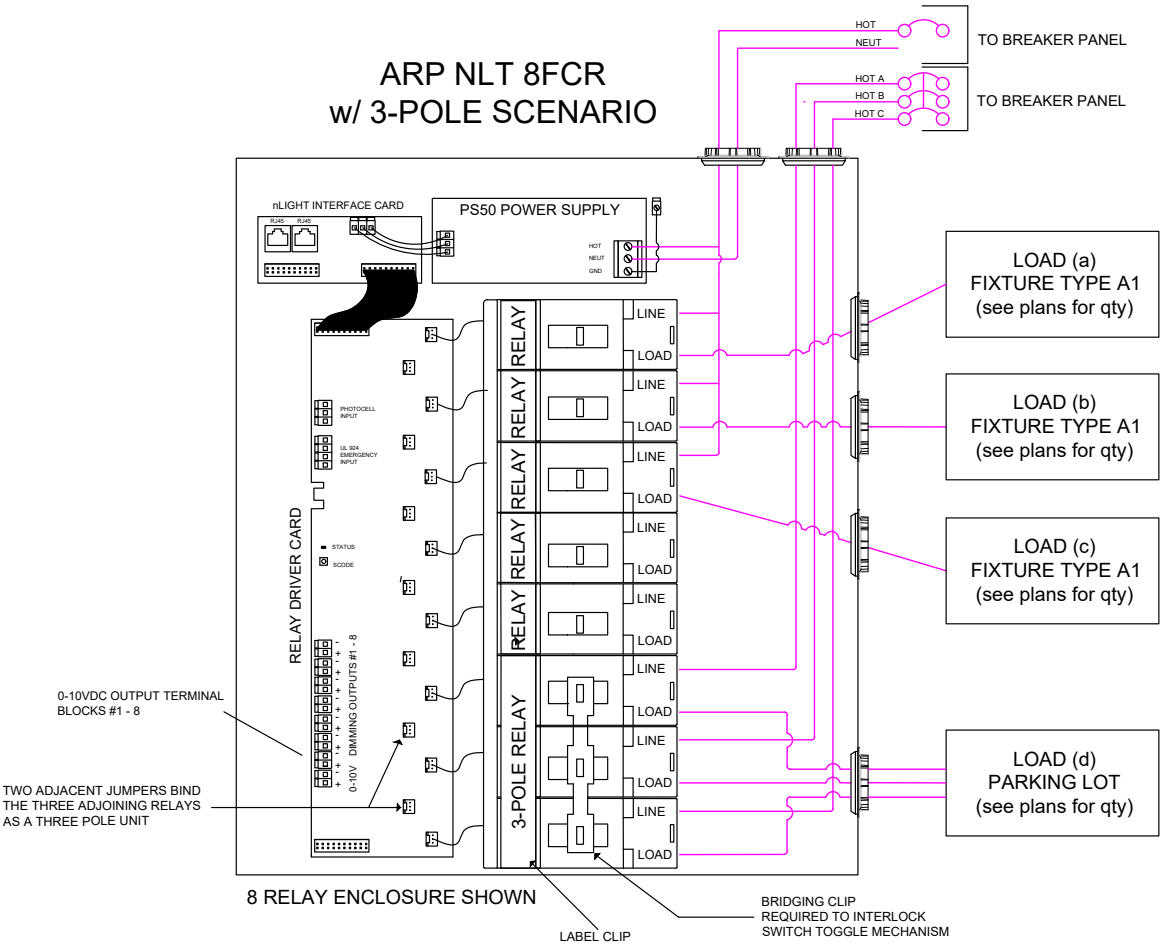

© 2016-2023 Acuity Brands Lighting, Inc. All rights reserved. Rev. 04/13/23

SPECIFICATIONS

ENCLOSURE DIMENSIONS

Note: Enclosure is NEMA 1 rated

8-Relay Enclosure

- BACKBOX ONLY: 14.25"H x 14.25"W x 4.00"D
- SURFACE MOUNT SCREW COVER (standard offering): 14.41"H x 14.41"W x 4.05"D
- FLUSH MOUNT SCREW COVER: 15.65"H x 15.65"W x 4.05"D (IN-WALL DEPTH: 4.0")

16 Relay Enclosure

- BACKBOX ONLY: 22.25"H x 14.25"W x 4.00"D
- SURFACE MOUNT SCREW COVER (standard offering): 22.45"H x 14.45"W x 4.06"D
- FLUSH MOUNT SCREW COVER: 23.65"H x 15.65"W x 4.06"D (IN-WALL DEPTH: 4.0")

32 Relay Enclosure

- BACKBOX ONLY: 32.10"H x 20.13"W x 6.00"D
- SURFACE MOUNT HINGED DOOR w/ KEYLOCK: 32.10"H x 20.13"W x 6.68"D

48 Relay Enclosure

- BACKBOX ONLY: 40.10"H x 20.13"W x 6.00"D
- SURFACE MOUNT HINGED DOOR w/ KEYLOCK: 40.10"H x 20.13"W x 6.68"D

Patent

- 10,129,950
- 9,691,578
- 9,368,306

RELAYS

"FCR" Type Relays - Field Configurable for 2-Pole and 3-Pole Relays

- Magnetic/Standard Ballast:
  - 40A @ 120-347VAC (Single-pole)
  - 40A @ 480VAC (Multi-pole)
- Electronic Ballast:
  - 16A @ 120-347VAC
- Tungsten:
  - 20A @ 120-277VAC
- Horsepower Ratings:
  - 2HP @ 120VAC
  - 3HP @ 240-277VAC
- DC:
  - 20A @ 48VDC
- SCCR:
  - 65kA @ 277/480VAC with:
    Screw Cover (SC) option for 8 & 16 relay enclosure
    Hinge Locking (HLK) option for 32 & 48 relay enclosure
  - 14kA @ 277/480VAC with:
    Hinge Locking (HLK) option for 8 & 16 relay enclosure

"SPR" Type Relays (Discontinued)

- Magnetic/Standard Ballast:
  - 20A @ 120-277VAC
- Electronic Ballast:
  - 16A @ 120-277VAC
- Tungsten:
  - 5000W @ 250VAC
- Horsepower Ratings:
  - 2HP @ 120VAC
- DC:
  - 20A @ 48VDC
- SCCR:
  - 5kA @ 277VAC

NLIGHT ADDRESSES PER PANEL

- (9) ARP04/08
  - (8) Relays/Dimming Outputs
  - (1) Programmable Input
- (18) ARP12/16
  - (16) Relays/Dimming Outputs
  - (2) Programmable Inputs
- (36) ARP24/32
  - (32) Relays/Dimming Outputs
  - (4) Programmable Inputs
- (54) ARP48
  - (48) Relays/Dimming Outputs
  - (6) Programmable Inputs

INPUTS (1 PER 8 RELAYS)

- (1) Programmable Input for contact closure or photosensor signal (see photosensor accessories above)
- (1) Override input (requires maintained signal)
- 24VDC/200mA auxiliary power available (per 8 relays)
- Connectors accept 16 to 24 AWG wire

OUTPUTS

- 0-10V Capable of Class 1 or Class 2 Wiring
- 100mA Sink Per Dimming Output
- Note:
  - Low trim default 1V, adjustable down to 0.7V
  - High trim default 10V, 10V max
  - Off mode: < 0.7V
- Connectors accept 16 to 24 AWG wire

POWER SUPPLY INPUTS

- 120-277VAC
- 347VAC Option
- 50/60 Hz
- Max 0.5 Amps for 8/16 relay enclosure
- Max 1.0 Amp for 32/48 relay enclosure

PROGRAMMING

- Via SensorView Software

ENVIRONMENT

- Ambient, 8 & 16 relay enclosure: 32-122F (0-50C)
- Ambient, 32 & 48 relay enclosure: 32-113F (0-45C)
- Relative Humidity: 90% non-condensing

STANDARDS

- UL and cUL 916 listed
- UL 924 listed (for emergency circuit use)
- UL 2043 (Plenum) Rated for Surface Mount Screw cover "SC SM" option (8 & 16 relay enclosure only)

BUS CONNECTOR

- (2) RJ45 connectors
- 40mA Bus Power per RJ45 (80mA total)

© 2016-2023 Acuity Brands Lighting, Inc. All rights reserved. Rev. 04/13/23