juno

2″ IC 600 AND 1000 LUMENS LED ROUND ADJUSTABLE

2LEDTRIM G2 ADJ

Project:

Fixture Type:

Location:

Contact/Phone:

PRODUCT DESCRIPTION

2 inch aperture recessed downlight is IC rated for insulated or non-insulated applications • Luminaire produces up to 1000 lumens and is available with optical distributions approximating that of 75W MR16 halogen lamps • Low profile form factor allows luminaire to fit in 2 x 6 construction • Designed to provide 50,000 hours of life • 5 year limited warranty on LED Components.

ENVIRONMENTALLY FRIENDLY, ENERGY EFFICIENT

- No harmful ultraviolet or infrared wavelengths
- No lead or mercury, RoHS compliant
- Comparable light output up to a 75W MR16 halogen lamp

PRODUCT SPECIFICATIONS

LED Light Engine Exceptional fixture to fixture color consistency within a 3-step MacAdam ellipse • 2700K, 3000K, 3500K, and 4000K color temperatures are available with 80 CRI or 90 CRI minimum.

Modular Optics Available with field interchangeable optics in 18° Spot, 24° Narrow Flood, or 40° Flood distributions • Gimbal provides up to 35° vertical aiming and 360° horizontal aiming.

Aesthetic Trim Trim features die cast beveled knife edge trim ring for clean ceiling interface available in white, black, satin nickel, or brushed bronze • Die cast baffles are available in white, black, satin nickel, or brushed bronze

LED Driver Choice of dedicated 120 volt (120) driver or universal voltage (MVOLT) driver that accommodates input voltages from 120-277 volts AC at 50/60Hz • Power factor > 0.9 • Dedicated 120 volt driver (120) is dimmable with the use of most incandescent, magnetic low voltage and electronic low voltage dimmers • Universal voltage driver (MVOLT) is dimmable with the use of most 0-10V protocol dimmers • For a list of compatible dimmers, see JUNO2ING2-DIM.

Life Rated for 50,000 hours at 70% lumen maintenance.

Labels ENERGY STAR® Certified • 90CRI fixtures are certified to the high efficacy requirements of California T24 JA8-2016 • Meets energy code Air Leakage requirements per ASTM E283 • UL and cUL listed for damp locations • 2NCHSG option is compatible with spray foam insulation with an R-value of 3.2 per inch or less.

Junction Box Includes (2) ½″ knock-outs equipped with pryout slots • Push-in electrical connectors for field connections.

Mounting Remodel style plaster frame installs from below the ceiling and accommodates ceiling thicknesses from ½″ to 1″ • For thicker ceilings up to 1 ½″, order 2JCTA150 • New Construction mounting frame, 2NCMF, is also available with Patented (US Patent D552,969) Real Nail 3® telescoping bar hangers to position fixture and locate wiring prior to ceiling installation • Recommend a minimum of 5.5″ cavity depth to install properly • Flexible supply is recommended and non-flexible supply requires top access.

Real Nail 3 Bar Hangers 2NCHSG new construction housing and new construction mounting frame, 2NCMF, available with telescoping Real Nail® 3 system which permits quick placement of housing anywhere within 24″ O.C. joists or suspended ceilings • Includes removable nail for repositioning of fixture in wood joist construction • Integral T-bar notch and clip for suspended ceilings • Design covered under US Patent D552,969 • 2NCHSG requires 2x8 construction

Specifications subject to change without notice.

Trim Finishes

WH BL SN BRZ

DIMENSIONS

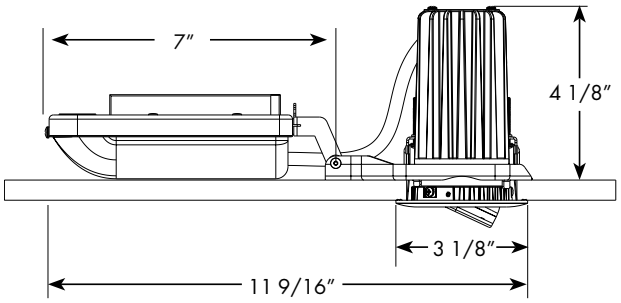

2 5/8″ CEILING CUTOUT

ELECTRICAL DATA (600L)

	Dedicated 120V (120)	Universal Voltage (MVOLT)	
Voltage	120	120	277
Input Power	7.5 (±5%)	7.2	7.5 (±5%)
Input Current	.06	.06	.03
Frequency	50/60Hz	50/60Hz	
Power Factor	>0.9	>0.9	>0.9

ELECTRICAL DATA (1000L)

	Dedicated 120V (120)	Universal Voltage (MVOLT)	
Voltage	120	120	277
Input Power	11.5 (±5%)	10.9	11.4 (±5%)
Input Current	.10	.09	.04
Frequency	50/60Hz	50/60Hz	
Power Factor	>0.9	>0.9	>0.9

 ©2015-2020 Acuity Brands Lighting, Inc.

2″ IC 600 AND 1000 LUMENS LED ROUND ADJUSTABLE 2LEDTRIM G2 ADJ

ORDERING INFORMATION DRIVER AND TRIM EACH ORDERED SEPARATELY.

DRIVER:

Example: 2LEDDRIVER G2 06LM 120 FRPC

Series		Generation		Lumens		Voltage		Driver	
2LEDDRIVER	Juno Recessed 2″ Driver	**G2**	Generation 2	**06LM**	600 Nominal Lumens	**120**	120V	**FRPC**	Forward/Reverse Phase Cut
				10LM	1000 Nominal Lumens	**MVOLT**	Multi-Volt (120-277V)	**ZT**	0-10V Dimming

Note: 120V must be ordered with FRPC.
MVOLT must be ordered with ZT

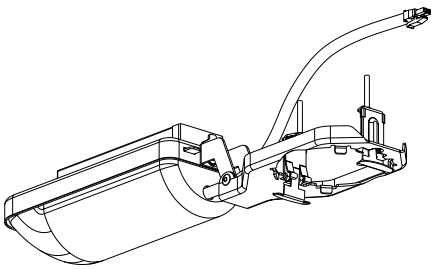

MOUNTING FRAME/DRIVER ASSEMBLY

Note: Driver assembly only intended for use with Gen2 LED trim modules. Not backward compatible with previous generation.

TRIM:

Example: 2LEDTRIM G2 ADJ 27K 80CRI FL BL

Series		Generation		Trim Designation		Color Temperature		CRI		Distribution		Trim Finish	
2LEDTRIM	Juno Recessed 2″ LED Trim	**G2**	Generation 2	**ADJ**	Round Adjustable	**27K**	2700K	**80CRI**	80+ CRI	**FL**	Flood	**BL**	Black
						30K	3000K	**90CRI**	90+ CRI	**NFL**	Narrow Flood	**BRZ**	Bronze
						35K	3500K			**SP**	Spot	**SN**	Satin Nickel
						40K	4000K					**WH**	White

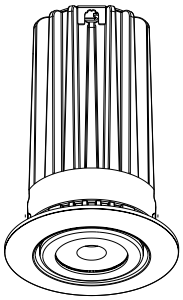

TRIM/LED ASSEMBLY

ACCESSORIES

Catalog No.	Description
2NCMF	New Construction Mounting Frame with Real Nail® 3 bar hangers
2NCHSG	2″ New Construction Housing for spray foam installation
2DTCA	2″ LED Drop Tile Ceiling Adapter
2JCTA150	Thick Ceiling adapter for 1″ - 1½″ thick ceiling
LEDOPTIC2 SP	18° Spot Optic
LEDOPTIC2 NFL	24° Narrow Flood Optic
LEDOPTIC2 FL	40° Flood Optic

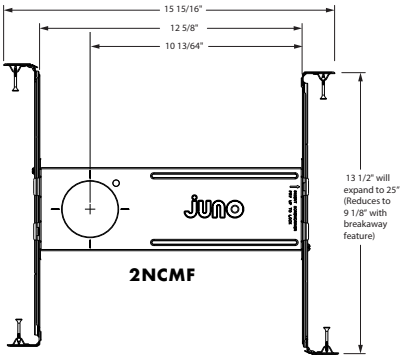

2NCMF

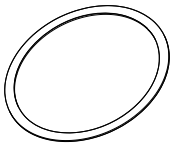

2DTCA

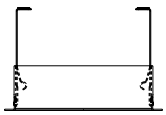

2JCTA150

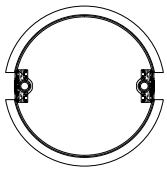

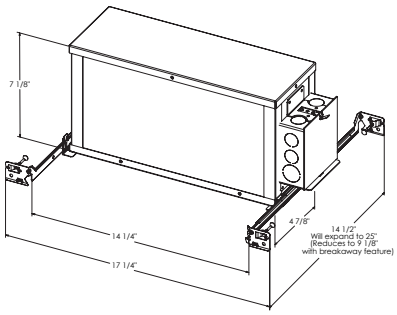

2NCHSG

2" IC 600 AND 1000 LUMENS LED ROUND ADJUSTABLE 2LEDTRIM G2 ADJ

PHOTOMETRICS

PHOTOMETRIC REPORT

Test Report#: PT07161925
Catalog No: 2LEDTRIM G2 ADJ 35K 80CRI SP WH (600L), Adj Gimbal with Spot Optic
Luminaire Spacing Criteria: 0.32
Luminaire LPW: 95

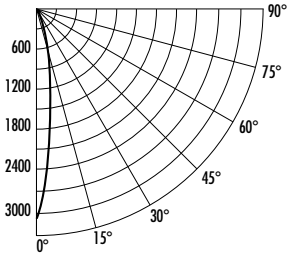

CANDLEPOWER DISTRIBUTION (Candelas)

Degrees Vertical	0°
0	3090
5	2523
15	816
25	275
35	127
45	51
55	17
65	10
75	6
85	2
90	0

AVERAGE INITIAL FOOTCANDLES

Multiple Units (Square Array, 60'x60' room)
Reflectances: Ceiling 80%, Wall 50%, Floor 20%

Spacing	RCR1	RCR3	RCR5
4'	49	44	39
5'	32	28	25
6'	22	19	17
7'	18	16	14
8'	14	12	11
9'	11	10	9
10'	8	7	6

ZONAL LUMEN SUMMARY

Zone	Lumens	%Lamp	%Fixture
0-30°	560	N/A	78.5
0-40°	638	N/A	89.5
0-60°	695	N/A	97.5
0-90°	713	N/A	100.0

INITIAL FOOTCANDLES

(One Unit, 7.5W, 17.7° Beam)

Distance to Illuminated Plane (Feet)	Footcandles Beam Center	Beam Diameter
4'	193.1	1.2
6'	85.8	1.9
8'	48.3	2.5
10'	30.9	3.1
12'	21.5	3.7

LUMINANCE (Average cd/m²)

Degrees	Average Luminance
45°	81936
55°	34328
65°	26240
75°	24484
85°	27265

PHOTOMETRIC REPORT

Test Report#: PT07161926
Catalog No: 2LEDTRIM G2 ADJ 35K 80CRI NFL WH (600L), Adj Gimbal with Narrow Flood Optic
Luminaire Spacing Criteria: 0.42
Luminaire LPW: 95

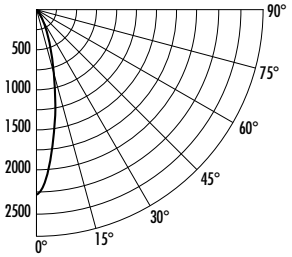

CANDLEPOWER DISTRIBUTION (Candelas)

Degrees Vertical	0°
0	2286
5	2009
15	840
25	304
35	127
45	51
55	21
65	11
75	6
85	2
90	0

AVERAGE INITIAL FOOTCANDLES

Multiple Units (Square Array, 60'x60' room)
Reflectances: Ceiling 80%, Wall 50%, Floor 20%

Spacing	RCR1	RCR3	RCR5
4'	50	44	39
5'	32	28	25
6'	22	19	17
7'	18	16	14
8'	14	12	11
9'	11	10	8
10'	8	7	6

ZONAL LUMEN SUMMARY

Zone	Lumens	%Lamp	%Fixture
0-30°	552	N/A	77.4
0-40°	633	N/A	88.8
0-60°	694	N/A	97.2
0-90°	714	N/A	100.0

INITIAL FOOTCANDLES

(One Unit, 7.5W, 24.4° Beam)

Distance to Illuminated Plane (Feet)	Footcandles Beam Center	Beam Diameter
4'	142.9	1.7
6'	63.5	2.6
8'	35.7	3.5
10'	22.9	4.3
12'	15.9	5.2

LUMINANCE (Average cd/m²)

Degrees	Average Luminance
45°	81296
55°	41627
65°	29721
75°	27982
85°	27265

PHOTOMETRIC REPORT

Test Report#: PT07161927
Catalog No: 2LEDTRIM G2 ADJ 35K 80CRI FL WH (600L), Adj Gimbal with Flood Optic
Luminaire Spacing Criteria: 0.70
Luminaire LPW: 95

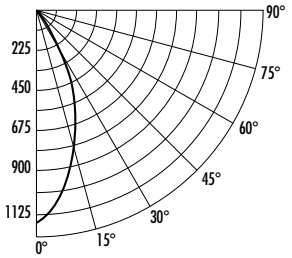

CANDLEPOWER DISTRIBUTION (Candelas)

Degrees Vertical	0°
0	1141
5	1105
15	823
25	439
35	168
45	55
55	20
65	7
75	3
85	0
90	0

AVERAGE INITIAL FOOTCANDLES

Multiple Units (Square Array, 60'x60' room)
Reflectances: Ceiling 80%, Wall 50%, Floor 20%

Spacing	RCR1	RCR3	RCR5
4'	50	43	38
5'	32	27	24
6'	22	19	17
7'	18	15	14
8'	14	12	11
9'	11	9	8
10'	8	7	6

ZONAL LUMEN SUMMARY

Zone	Lumens	%Lamp	%Fixture
0-30°	531	N/A	74.3
0-40°	639	N/A	89.5
0-60°	702	N/A	98.4
0-90°	714	N/A	100.0

INITIAL FOOTCANDLES

(One Unit, 7.5W, 43.1° Beam)

Distance to Illuminated Plane (Feet)	Footcandles Beam Center	Beam Diameter
4'	71.3	3.2
6'	31.7	4.7
8'	17.8	6.3
10'	11.4	7.9
12'	7.9	9.5

LUMINANCE (Average cd/m²)

Degrees	Average Luminance
45°	88657
55°	39852
65°	19814
75°	13116
85°	1298

Fixtures tested to IES recommended standard for solid state lighting per LM-79-08. Photometric performance on a single unit represents a baseline of performance for the fixture. Results may vary in the field.

Multiplier:	80 CRI	90 CRI
	27K = .94	27K = .83
	30K = .97	30K = .86
	35K = 1.00	35K = .88
	40K = 1.03	40K = .90

 ©2015-2020 Acuity Brands Lighting, Inc.

2" IC 600 AND 1000 LUMENS LED ROUND ADJUSTABLE 2LEDTRIM G2 ADJ

PHOTOMETRICS

PHOTOMETRIC REPORT

Test Report#: PT07161928
Catalog No: 2LEDTRIM G2 ADJ 35K 80CRI SP WH (1000L), Adj Gimbal with Spot Optic
Luminaire Spacing Criteria: 0.32
Luminaire LPW: 96

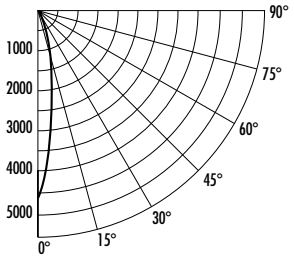

CANDLEPOWER DISTRIBUTION (Candelas)

Degrees Vertical	0°
0	4605
5	3793
15	1256
25	427
35	190
45	78
55	27
65	15
75	9
85	4
90	0

AVERAGE INITIAL FOOTCANDLES

Multiple Units (Square Array, 60'x60' room)
Reflectances: Ceiling 80%, Wall 50%, Floor 20%

Spacing	RCR1	RCR3	RCR5
4'	76	67	60
5'	49	43	38
6'	34	30	27
7'	27	24	22
8'	22	19	17
9'	17	15	13
10'	12	11	10

ZONAL LUMEN SUMMARY

Zone	Lumens	%Lamp	%Fixture
0-30°	856	N/A	78.5
0-40°	978	N/A	89.5
0-60°	1065	N/A	97.5
0-90°	1093	N/A	100.0

INITIAL FOOTCANDLES

(One Unit, 11.4W, 18.2° Beam)

Distance to Illuminated Plane (Feet)	Footcandles Beam Center	Beam Diameter
4'	287.8	1.3
6'	127.9	1.9
8'	71.9	2.6
10'	46.0	3.2
12'	32.0	3.8

LUMINANCE (Average cd/m²)

Degrees	Average Luminance
45°	124984
55°	53267
65°	40163
75°	38475
85°	48039

PHOTOMETRIC REPORT

Test Report#: PT07161929
Catalog No: 2LEDTRIM G2 ADJ 35K 80CRI NFL WH (1000L), Adj Gimbal with Narrow Flood Optic
Luminaire Spacing Criteria: 0.42
Luminaire LPW: 95

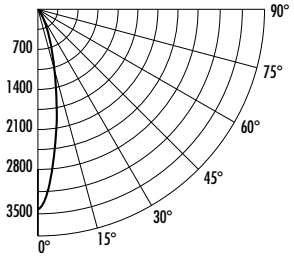

CANDLEPOWER DISTRIBUTION (Candelas)

Degrees Vertical	0°
0	3480
5	3061
15	1280
25	462
35	192
45	77
55	32
65	17
75	10
85	4
90	0

AVERAGE INITIAL FOOTCANDLES

Multiple Units (Square Array, 60'x60' room)
Reflectances: Ceiling 80%, Wall 50%, Floor 20%

Spacing	RCR1	RCR3	RCR5
4'	75	67	59
5'	48	43	38
6'	34	30	26
7'	27	24	21
8'	21	19	17
9'	16	14	13
10'	12	11	9

ZONAL LUMEN SUMMARY

Zone	Lumens	%Lamp	%Fixture
0-30°	842	N/A	77.4
0-40°	964	N/A	88.7
0-60°	1056	N/A	97.1
0-90°	1087	N/A	100.0

INITIAL FOOTCANDLES

(One Unit, 11.4W, 24.4° Beam)

Distance to Illuminated Plane (Feet)	Footcandles Beam Center	Beam Diameter
4'	217.5	1.7
6'	96.7	2.6
8'	54.4	3.5
10'	34.8	4.3
12'	24.2	5.2

LUMINANCE (Average cd/m²)

Degrees	Average Luminance
45°	123544
55°	63526
65°	46322
75°	44158
85°	48039

PHOTOMETRIC REPORT

Test Report#: PT07161930
Catalog No: 2LEDTRIM G2 ADJ 35K 80CRI FL WH (1000L), Adj Gimbal with Flood Optic
Luminaire Spacing Criteria: 0.70
Luminaire LPW: 95

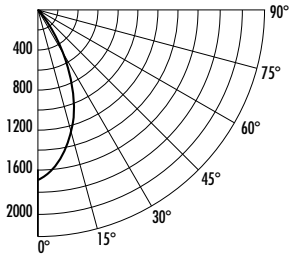

CANDLEPOWER DISTRIBUTION (Candelas)

Degrees Vertical	0°
0	1721
5	1665
15	1242
25	664
35	253
45	84
55	31
65	12
75	5
85	1
90	0

AVERAGE INITIAL FOOTCANDLES

Multiple Units (Square Array, 60'x60' room)
Reflectances: Ceiling 80%, Wall 50%, Floor 20%

Spacing	RCR1	RCR3	RCR5
4'	75	65	57
5'	48	41	37
6'	33	29	25
7'	27	23	21
8'	21	18	16
9'	16	14	12
10'	12	10	9

ZONAL LUMEN SUMMARY

Zone	Lumens	%Lamp	%Fixture
0-30°	800	N/A	74.2
0-40°	963	N/A	89.3
0-60°	1060	N/A	98.3
0-90°	1078	N/A	100.0

INITIAL FOOTCANDLES

(One Unit, 11.4W, 43.2° Beam)

Distance to Illuminated Plane (Feet)	Footcandles Beam Center	Beam Diameter
4'	107.6	3.2
6'	47.8	4.8
8'	26.9	6.3
10'	17.2	7.9
12'	12.0	9.5

LUMINANCE (Average cd/m²)

Degrees	Average Luminance
45°	133786
55°	60961
65°	31327
75°	21861
85°	9088

Fixtures tested to IES recommended standard for solid state lighting per LM-79-08. Photometric performance on a single unit represents a baseline of performance for the fixture. Results may vary in the field.

Multiplier:	80 CRI	90 CRI
	27K = .94	27K = .83
	30K = .97	30K = .86
	35K = 1.00	35K = .88
	40K = 1.03	40K = .90

 ©2015-2020 Acuity Brands Lighting, Inc.

2" IC 600 AND 1000 LUMENS LED ROUND ADJUSTABLE 2LEDTRIM G2 ADJ

PHOTOMETRICS

CBCP • Centerbeam candlepower
FC • Footcandles at beam center (aim point)

In vertical aiming applications, aim point (X) is determined by dividing distance from the wall (D) by the tangent of the desired aim angle (A) (0.5774 for 30°).

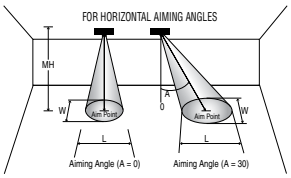

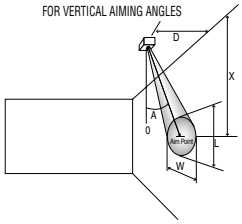

Horizontal Aiming Angles

Vertical Aiming Angles

Fixture	Beam Spread	CBCP	0°				30°			30°				
			MH	FC	L	W	FC	L	W	D	FC	X	L	W
2LEDTRIM (600L) Flood Optic	40°	1141	3	127	2.2	2.2	82	3.0	2.5	1	143	1.7	4.8	1.5
			4	71	2.9	2.9	46	4.1	3.4	2	36	3.5	9.7	2.9
			5	46	3.6	3.6	30	5.1	4.2	3	16	5.2	14.5	4.4
			6	32	4.4	4.4	21	6.1	5.0	4	9	6.9	19.3	5.8
			7	23	5.1	5.1	15	7.1	5.9	5	6	8.7	24.2	7.3
2LEDTRIM (600L) Narrow Flood Optic	24°	2286	3	254	1.3	1.3	165	1.7	1.5	1	286	1.7	2.0	0.9
			4	143	1.7	1.7	93	2.3	2.0	2	71	3.5	3.9	1.7
			5	91	2.1	2.1	59	2.9	2.5	3	32	5.2	5.9	2.6
			6	64	2.6	2.6	41	3.5	2.9	4	18	6.9	7.9	3.4
			7	47	3.0	3.0	30	4.0	3.4	5	11	8.7	9.8	4.3
2LEDTRIM (600L) Spot Optic	18°	3445	4	215	1.3	1.3	140	1.7	1.5	2	108	3.5	2.7	1.3
			5	138	1.6	1.6	90	2.1	1.8	3	48	5.2	4.1	1.9
			6	96	1.9	1.9	62	2.6	2.2	4	27	6.9	5.5	2.5
			7	70	2.2	2.2	46	3.0	2.6	5	17	8.7	6.9	3.2
			8	54	2.5	2.5	35	3.4	2.9	6	12	10.4	8.2	3.8

For 2700K fixtures, use 0.96 multiplier; for 3000K fixtures, use 1.00 multiplier; for 3500K fixtures, use 1.03 multiplier; for 4000K fixtures, use 1.06 multiplier.

Fixture	Beam Spread	CBCP	0°				30°			30°				
			MH	FC	L	W	FC	L	W	D	FC	X	L	W
2LEDTRIM (1000L) Flood Optic	40°	1721	3	191	2.2	2.2	124	3.0	2.5	1	215	1.7	4.8	1.5
			4	108	2.9	2.9	70	4.1	3.4	2	54	3.5	9.7	2.9
			5	69	3.6	3.6	45	5.1	4.2	3	24	5.2	14.5	4.4
			6	48	4.4	4.4	31	6.1	5.0	4	13	6.9	19.3	5.8
			7	35	5.1	5.1	23	7.1	5.9	5	9	8.7	24.2	7.3
2LEDTRIM (1000L) Narrow Flood Optic	24°	3480	3	387	1.3	1.3	251	1.7	1.5	1	435	1.7	2.0	0.9
			4	218	1.7	1.7	141	2.3	2.0	2	109	3.5	3.9	1.7
			5	139	2.1	2.1	90	2.9	2.5	3	48	5.2	5.9	2.6
			6	97	2.6	2.6	63	3.5	2.9	4	27	6.9	7.9	3.4
			7	71	3.0	3.0	46	4.0	3.4	5	17	8.7	9.8	4.3
2LEDTRIM (1000L) Spot Optic	18°	4604	4	288	1.3	1.3	187	1.7	1.5	2	144	3.5	2.7	1.3
			5	184	1.6	1.6	120	2.1	1.8	3	64	5.2	4.1	1.9
			6	128	1.9	1.9	83	2.6	2.2	4	36	6.9	5.5	2.5
			7	94	2.2	2.2	61	3.0	2.6	5	23	8.7	6.9	3.2
			8	72	2.5	2.5	47	3.4	2.9	6	16	10.4	8.2	3.8

For 2700K fixtures, use 0.96 multiplier; for 3000K fixtures, use 1.00 multiplier; for 3500K fixtures, use 1.03 multiplier; for 4000K fixtures, use 1.06 multiplier.