JUNO

Project:

Fixture Type:

Location:

Contact/Phone:

4" LOW VOLTAGE UNIVERSAL IC NEW CONSTRUCTION HOUSING

50W MR16

IC44N SERIES

PRODUCT DESCRIPTION

IC Air-Loc® New Construction Housing with all 4" trims complies with IECC, Washington State and other state Energy Codes • Double wall construction • Energy efficient, sealed inner housing does not require separate ALG gasket **G option** provides pre-installed Air-Loc gasket on mounting frame to seal between fixture and mounting surface • Air-Loc housing stops infiltration and exfiltration of air, reducing heating and cooling costs.

PRODUCT SPECIFICATIONS

Lamp One 12V, 50W MR16 lamp.

Socket Ceramic bi-pin socket with aluminum heat shield.

Trims Trim selection shown on page 3.

Transformer 120V to 12V 50VA thermally protected magnetic transformer mounted inside outer housing.

Dimming May be dimmed using dimmers specifically designed for low voltage magnetic transformers; consult factory or dimmer manufacturer for additional information.

Labels UL listed for through-branch wiring, damp locations and IP • Product thermally protected against improper use of lamps • Union made • UL Listed/CSA certified • Trim No. 441, 4401, 4402 and 4481 are wet location approved for covered ceiling applications.

Testing All reports are based on published industry procedures; field performance may differ from laboratory performance.

Specifications subject to change without notice.

INSTALLATION

Real Nail® Bar Hangers Telescoping, Patented (US Patent D552,969) Real Nail 3 and Real Nail 2 systems permits quick placement of housing anywhere within 24" O.C. joists or suspended ceilings • Bars scored in two locations for fast, clean breaking, allowing housing installation in tight applications • Bars captive to mounting frame • Edge-mounted for extra strength • Quick-Loc slot (location identified on the mounting frame) and oversized locking set screw lock fixture in position • May be installed either perpendicular or parallel to junction box.

Real Nail 3 Bar Hanger Integral T-bar notch and clip secures housing in suspended ceiling grid – no accessory clips required • 24" expansion stop allows quick placement of fixture in standard grid spacing • Captive bugle-headed ring shank nail for quick one-step installation and easy removal with claw hammer for fixture relocation • Bar hanger foot contoured to align to bottom of construction joist • Alternate mounting holes included.

Real Nail 2 Bar Hanger (S options) Small bar hanger foot designed to install directly on strapping construction material • Features Real Nail captive nail system for quick one-step installation • G2405 accessory clips required for suspended ceiling installation.

Junction Box Pre-wired junction box provided with (6) ½" and (1) ¾" knockouts, (4) Non-metallic sheathed cable connectors and ground wire, U.L. listed/CSA certified for through-branch wiring, maximum 8 No. 12 AWG 90˚ C branch circuit conductors (3 in, 3 out) • Junction box provided with removable access plates • Knockouts equipped with pryout slots • **W options** are supplied with **push-in electrical connectors** for fast installation.

Mounting Frame 22-gauge die-formed galvanized steel mounting frame • Rough-in section (junction box, mounting frame, housing and bar hangers) fully assembled for ease of installation • Pre-installed Air-Loc gasket for **G options.**

Housing Air-Loc IC housing, .032" aluminum • Access door for junction box accessibility • Housing is vertically adjustable to accommodate up to a 1" ceiling thickness.

DIMENSIONS

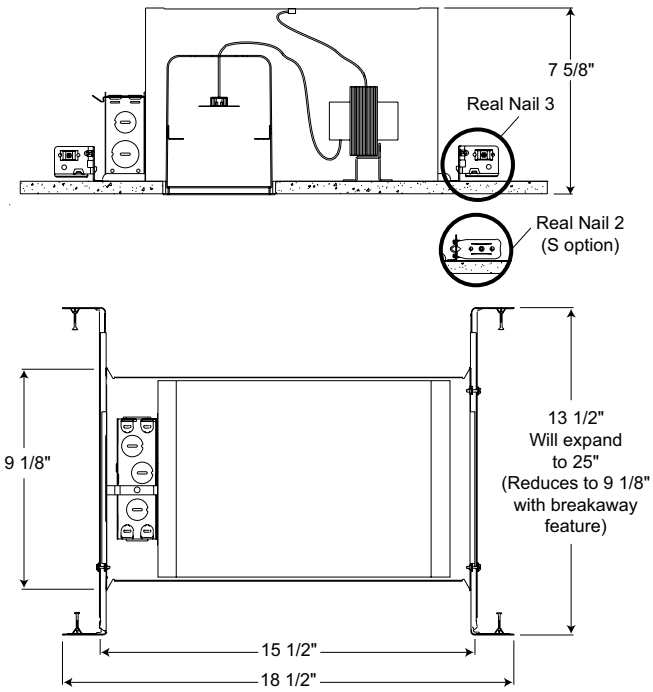

4 1/2" CEILING CUTOUT

Accessories

Catalog Number	Description
4TSA	4" Housing Trim Adapter
G2405	T-Bar Clips (Set of 4), for S option only

To order, specify catalog number.

Warranty

1-year limited warranty. This is the only warranty provided and no other statements in this specification sheet create any warranty of any kind. All other express and implied warranties are disclaimed. Complete warranty terms located at: www.acuitybrands.com/support/warranty/terms-and-conditions

Note: Actual performance may differ as a result of end-user environment and application.

Specifications subject to change without notice.

PRODUCT CODES

Catalog Number		Input Voltage	Lamp Rating
IC44N	4" Low Voltage New Construction IC Housing	120V	12V 50W MR16
IC44N G	4" Low Voltage New Construction IC Housing with pre-installed Air-Loc gasket	120V	12V 50W MR16
IC44N S	4" Low Voltage New Construction IC Housing with smaller footprint bar hanger (Real Nail 2)	120V	12V 50W MR16
IC44N S G	4" Low Voltage New Construction IC Housing with smaller footprint bar hanger (Real Nail 2) and pre-installed Air-Loc gasket	120V	12V 50W MR16
IC44N W	4" Low Voltage New Construction IC Housing with push-in electrical connectors for fast, secure installation	120V	12V 50W MR16
IC44N W G	4" Low Voltage New Construction IC Housing with push-in electrical connectors and pre-installed Air-Loc gasket	120V	12V 50W MR16

Housing and trim can be ordered together or separate, but will always ship separately.

4" LOW VOLTAGE UNIVERSAL IC NEW CONSTRUCTION HOUSING

50W MR16

IC44N SERIES

TRIMS/LAMPS

Catalog Number	Description
442 CWH	4" Downlight Deep Cone Trim - Clear Alzak® Cone, White Trim Ring
442 GWH	4" Downlight Deep Cone Trim - Gold Cone, White Trim Ring
442 BWH	4" Downlight Deep Cone Trim - Black Cone, White Trim Ring
442 HZWH	4" Downlight Deep Cone Trim - Haze Cone, White Trim Ring
442 WHZWH	4" Downlight Deep Cone Trim - Wheat Haze Cone, White Trim Ring
443 BWH	4" Downlight Pinhole with Baffle Trim - Black Baffle, White Trim Ring
440 WH	4" Adjustable Flush Gimbal Ring Trim - White
440 BL	4" Adjustable Flush Gimbal Ring Trim - Black
440 SC	4" Adjustable Flush Gimbal Ring Trim - Satin Chrome
440 BRZ	4" Adjustable Flush Gimbal Ring Trim - Bronze 40˚ Vertical Adjustment
444 BWH	4" Adjustable Baffle Downlight Trim - Black Baffle, White Trim Ring
444 BSC	4" Adjustable Baffle Downlight Trim - Black Baffle, Satin Chrome Trim Ring
444 BBRZ	4" Adjustable Baffle Downlight Trim - Black Baffle, Bronze Trim Ring
444 BBL	4" Adjustable Baffle Downlight Trim - Black Baffle, Black Trim Ring
444 WWH	4" Adjustable Baffle Downlight Trim - White Baffle, White Trim Ring 35˚ Vertical Adjustment
445 WH	4" Adjustable Slot Aperture Trim - White 50˚ Vertical Adjustment
447 CWH	4" Adjustable Cone Downlight Trim - Clear Alzak® Cone, White Trim Ring
447 GWH	4" Adjustable Cone Downlight Trim - Gold Cone, White Trim Ring
447 BWH	4" Adjustable Cone Downlight Trim - Black Cone, White Trim Ring
447 PTSC	4" Adjustable Cone Downlight Trim - Pewter Cone, Satin Chrome Trim Ring
447 HZWH	4" Adjustable Cone Downlight Trim - Haze Cone, White Trim Ring
447 WHZWH	4" Adjustable Cone Downlight Trim - Wheat Haze Cone, White Trim Ring
447 WHZBRZ	4" Adjustable Cone Downlight Trim - Wheat Haze Cone, Bronze Trim Ring 35˚ Vertical Adjustment
449 WH	4" Adjustable Aiming Elbow Trim - White
449 BL	4" Adjustable Aiming Elbow Trim - Black
449 SC	4" Adjustable Aiming Elbow Trim - Satin Chrome
449 BRZ	4" Adjustable Aiming Elbow Trim - Bronze 75˚ Vertical Adjustment
441 WWH ◆	4" Lensed Downlight Adjustable Trim - White, White Trim Ring
441 WSC ◆	4" Lensed Downlight Adjustable Trim - Perimeter Frosted Lens, Satin Chrome Trim Ring
441 WBRZ ◆	4" Lensed Downlight Adjustable Trim - Perimeter Frosted Lens, Bronze Trim Ring 35˚ Vertical Adjustment
446 WH	4" Wall Wash Adjustable Scoop Trim - White 50˚ Vertical Adjustment

447SQ HZWH	4" Square Downlight Adjustable Trim - Haze, White Trim Ring
447SQ BWH	4" Square Downlight Adjustable Trim - Black, White Trim Ring
447SQ WHZWH	4" Square Downlight Adjustable Trim - Wheat Haze, White Trim Ring 35˚ Vertical Adjustment
443SQ WH	4" Square Pinhole Trim - White
440SQ WH	4" Square Flush Gimbal Trim - White
440SQ BL	4" Square Flush Gimbal Trim - Black 35˚ Vertical Adjustment
441SQ WWH ◆	4" Downlight Adjustable Square Lensed Trim - White, White Trim Ring 35˚ Vertical Adjustment

Note: Lamps may be dimmed. Use dimmers specifically designed for low voltage magnetic transformers; consult factory or dimmer manufacturer for additional information. 50W MR16 maximum wattage when used with IC44N.

Trim Size: 5" O.D.

Alzak is a registered trademark of Alcoa Corp.
Note: In Canada when insulation is present, Type IC fixtures must be used.

AIR-LOC JUNO IC housings meet IECC Energy Code requirements per ASTM E283.

Air-Loc® rated trims are pre-gasketed for minimum air leakage with IC housings.

◆ UL Listed for use in wet location.

 © 2017-2022 Acuity Brands Lighting, Inc.