ENVIRONMENTALLY FRIENDLY, ENERGY EFFICIENT

- One fixture converts nearly any manufacturers incandescent, CFL or H.I.D. fixtures with a rough-in inner diameter of 6″ to 6-5/8″diameter to high efficiency LED
- All installation can be performed from below the ceiling with out removing existing fixture
- Energy savings up to 50-60% vs. CFL and HID
- Superior-quality white LED light output using Chip on Board technology
- Patented Hyperbolic Reflector (U.S. Patent No. 10,670,227 B2)
- Low UGR: UGR of zero for fixtures aimed at nadir with a cut-off equal to or less than 60deg per CIE 117-1995 Discomfort Glare in Interior Lighting.

PRODUCT SPECIFICATIONS

Atrius™ - Ready Product: Select models of the L-series product line deliver valuable data and connectivity to the Atrius IoT location based platform services. For more information, please refer to www.acuitybrands.com/Atrius.

OPTICS

Hyperbolic: Patented hyperbolic shape (U.S. Patent No. 10,670,227 B2) optimized for small, directional LED source, maximizes fixture efficiency while creating the "Silent Ceiling" appearance by reducing lamp image and aperture brightness • Geometry of hyperbolic curve provides unique aperture appearance and smoother light distribution

Parabolic/Lens: Computer-optimized parabolic reflector with frosted convexed lens regressed into cone provides uniform distribution with no striations

Wall Wash: Available in Hyperbolic and Parabolic. Both providing uniform distributions with no striations

Overlap Ring: All fixtures include a white painted overlap ring to conceal the housing from below the ceiling. The ring will extend past the trim flange. For additional ring color options, consult factory.

ELECTRICAL

LED Light Engine: Compact light source delivers uniform illumination without pixilation, enabling excellent beam control • 2SDCM (5000K within 3SDCM) • 80, 90 & 97 CRI • Replaceable light engine with push in wire connections mounts directly to heat sink and is easily replaceable

Passive Cooling: Aluminum heat sink integrated directly with housing provides superior thermal management to ensure the long life of LED

Active Cooling: Low noise, high efficiency, long life fan with ultra-low thermal resistance heat sink ensures long life and maximum performance of LEDs on light weight units of 8500 lumens and higher • Active cooling unit easily accessible from above or below the ceiling

LED Driver: Power factor >0.9 • Easily replaceable from above or below the ceiling

Dimming: Dimmable via 0-10V protocol standard • Optional drivers available for use with Lutron EcoSystem, 2-wire dimmers DMXR, or DALI • For a list of compatible dimmers, see LED-DIM.

Life: Rated for 60,000 hours at 70% lumen maintenance

Operation Temperature: -20° C to 50° C

A+ Capable options indicated by this color background

J7.1.18G4

ATRIUS READY

indy

BAA

800 TO 9000 LUMEN
6″ LED RETRO-FIT

HYPERBOLIC / PARABOLIC / WALLWASH

LRT6 SERIES

Type	Cat. No.
_____	_____

Project: _____

Notes: _____

Emergency Battery Pack (Optional) output: Provides a minimum of 600 (BR & BRT20C), or 1000 (HBR) lumens for a minimum duration of 90 minutes • BRT20C option is CEC Title 20 compliant

BUY AMERICAN ACT: This product is assembled in the USA and meets the Buy America(n) government procurement requirements under FAR, DFARS and DOT regulations. Please refer to www.acuitybrands.com/buy-american for additional information.

Warranty: 5 years when used in accordance with manufacturing guidelines. This is the only warranty provided and no other statements in this specification sheet create any warranty of any kind. All other express and implied warranties are disclaimed.

Note: Actual performance may differ as a result of end-user environment and application.

Specifications subject to change without notice.

ORDERING INFORMATION

Complete Catalog# Example Includes (Rough-In, option, reflector, accessory)

Ordering Example: LRT6 08LM 27K MVOLT G4 80CRI ZT HW CS PF

ROUGH-IN

Series	Lumen Package	Color Temperature	Voltage	Generation	CRI	Driver		Rough-In Options	
LRT6 6″ L-Series Retrofit Downlight	**08LM** 800 Lumens **13LM** 1300 Lumens **15LM** 1500 Lumens **17LM** 1700 Lumens **23LM** 2300 Lumens **28LM** 2800 Lumens **33LM** 3300 Lumens **40LM** 4000 Lumens **45LM** 4500 Lumens **50LM** 5000 Lumens **55LM** 5500 Lumens **60LM** 6000 Lumens **65LM** 6500 Lumens **70LM** 7000 Lumens **75LM** 7500 Lumens **80LM** 8000 Lumens **85LM** 8500 Lumens **90LM** 9000 Lumens	**27K** 2700K **30K** 3000K **35K** 3500K **40K** 4000K **50K** 5000K	**120** **277** **347** **MVOLT**[1] (120-277)	**G4**	**80CRI** **90CRI**[13] **97CRI**[2]	**DALI** DALI Control Dimming **DMXR**[3] DMX/RDM Driver **EDAB**[19] eldoLED SOLOdrive DALI. Logarithmic dimming to <1% **EDXB**[3,5] eldoLED POWERdrive DMX/RDM w/ Phoenix Connectors. Dimming to <1% **EZ10**[19] eldoLED 0-10V ECOdrive. Linear dimming to 10% min. **EZ1**[19] eldoLED 0-10V ECOdrive. Linear dimming to 1% min. **EZB**[19] eldoLED 0-10V SOLOdrive. Logarithmic dimming to <1% **FD**[4,6] Forward or Reverse Phase Dimming Driver **ECOD**[7,15,20] Lutron Ecosystem 2-Wire Dimming Driver **ZT** 0-10V Dimming to 10% min **GZ1**[4] 0-10V Dimming to 1% min	**F**[3,8] Fuse and Fuse Holder **CP**[9,12,21] Chicago Plenum **BR**[3,11] 600 Lumen Emergency Battery Pack w/Remote Test Switch **BRT20C**[3,11] 600 Lumen Emergency Battery Pack w/ Remote Test Switch, CEC Title 20 Compliant **HBR**[3,11] 1000 Lumen Emergency Battery Pack w/Remote Test Switch **NL**[8,10] nLight® Dimming Pack Controls **NLER**[8,10] nLight® dimming pack controls. nLER controls fixtures on emergency circuit **NLTAIR2**[3,10,17] nLight® AIR Dimming Pack Wireless Controls **NLTAIRER2**[3,10,17] nLight® AIR Dimming Pack Wireless Controls. Controls fixtures on emergency circuit **INC**[6,18] Medium base socket adapter for quick retro-fit of incandescent fixtures **AE2CD**[16,17] Atrius™ - Ready, VLC Commissioning, Radio (BT Positioning)

 © 2017-2023 Acuity Brands Lighting, Inc.

REFLECTOR To order reflector separately, use "LRT6" prefix before reflector option values. Ex: LRT6 HW CS PF

Trim Style				Finish		Trim Options	
HM[11]	Hyperbolic Medium	**P**	Parabolic	**CD**	Clear Diffuse	**PF**[14]	White Flange
HW[11]	Hyperbolic Wide	**WS**[11]	Single Wall Wash	**CS**	Clear Specular	**WET**	Wet Location
HWS[11]	Hyperbolic Single Wall Wash			**CSS**	Clear Semi-Specular		
				WH	White, White Flange		

ACCESSORIES

Accessories	
INOR6/712	LRT6 Oversize ring for rough-in openings between 6-5/8" and 7-1/2"

Ordering Notes

1 MVOLT not available for 85LM and up.
2 2700K & 3000K only.
3 Not available with 347V.
4 Not available for 6000 lumens and up.
5 Not available for 4000 and 5500 lumens and up.
6 120V only.
7 Not available for 5000 lumens and up.
8 Specify voltage.
9 BR, BRT20C, HBR, EDXB, NL, NLER, NLTAIR2, NLTAIRER2 not compatible with CP.
10 Only compatible with the following driver options: EZ1, EZB, EZ10, GZ1; ZT (for 60LM - 90LM only).
11 Not compatible with WET.
12 Not available for 8500 lumens and up.
13 90CRI not compatible with 50K for 800-2300 lumens.
14 PF not available with BL or WH finishes. When specifying BL or WH finishes, flange is always painted white.
15 Not compatible with BR, BRT20C, or HBR.
16 See AE2CD notes in following table for compatibility with other options.
17 NLTAIR2, NLTAIRER2, AE2CD not recommended for metal ceiling installations.
18 Cannot be used with BR, HBR, or BRT20C. Can only be used with FD, and ZT drivers (but cannot be dimmed with ZT).
19 Not available for 85LM and up.
20 ECOD with MVOLT only available for 08LM - 17LM.
21 CP with MVOLT only available for 08LM - 17LM.

AE2CD Notes

Only compatible with EZ1 driver for 55LM and below.
CP, BR, BRT20C, HBR, NL, NLER, NLTAIR2, NLTAIRER2 not compatible with AE2CD.
Recommended ceiling height of 30' and under; not intended for use on ceilings greater than 40' or metal ceiling installations.

The Bluetooth® word mark and logos are registered trademarks owned by Bluetooth SIG, Inc. and any use of such marks by Acuity Brands Lighting is under license.

Before ordering, check fixture compatibility as shown below:

1. Fixtures with closed cans are not compatible with Indy LRT retrofit fixtures. Only open frame style fixtures can be retrofitted using Indy LRT retrofits.
2. Measure the existing fixture frame opening by removing the existing reflector, then measuring the diameter of the existing metal frame opening. The correct measurement is shown in the photo below.
3. Refer to the below table to pick the correct fixture, or fixture plus oversize ring

Measure the diameter of the metal frame through the center of the opening

Existing Fixture Frame Opening Diameter	Use This Retrofit
6" through 6-5/8"	LRT6 fixture
6-11/16" through 7-1/2"	LRT6 fixture plus INOR6/712 oversize ring
7-5/8" through 8-1/8"	LRT8 fixture
8-3/16" through 8-7/8"	LRT8 fixture plus INOR8/878 oversize ring
9" through 10"	LRT9 fixture
10" through 11"	LRT10 fixture
11-3/4" through 12-3/4"	LRT12 fixture

PRODUCT SPECIFICATIONS (cont.)

MECHANICAL

Retro-fit Housing: Housing installs from below ceiling • Must be installed in ring frame only • Secured in place by three (3) tension clips • Tension clips accommodate ceilings from 1/2″ to 1-1/8″ thick • Integral heat sink conducts heat away from LED light engine • Driver is accessible from below the ceiling and can be upgraded to accommodate future technology improvements.

TRIMS:

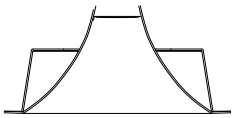

HYPERBOLIC

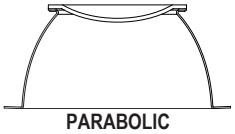

PARABOLIC

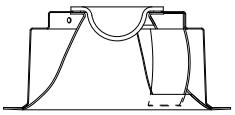

HYPERBOLIC WALLWASH

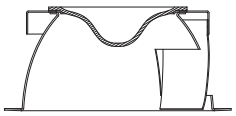

PARABOLIC WALLWASH

APERTURE: 5-1/2" Dia.
RETROFITS: fixtures with a rough-in inner diameter of 6″ to 6-5/8″
OVERLAP RING: 8" Dia.

PASSIVE COOLING DIMENSIONS: 800 - 8000 Lumens

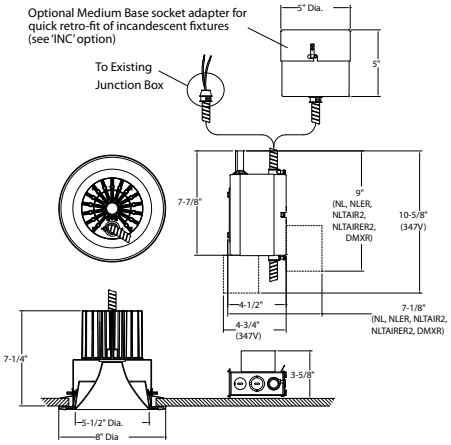

ACTIVE COOLING DIMENSIONS: 8500 - 9000 Lumens

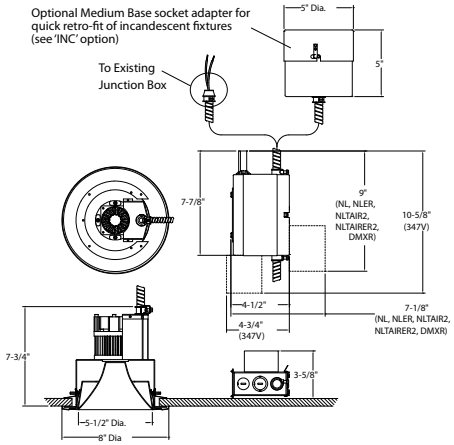

Atrius Enabled

PASSIVE COOLING DIMENSIONS: 800 - 8000 Lumens

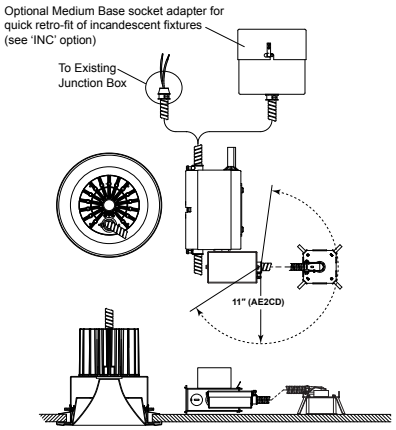

ACTIVE COOLING DIMENSIONS: 8500 - 9000 Lumens

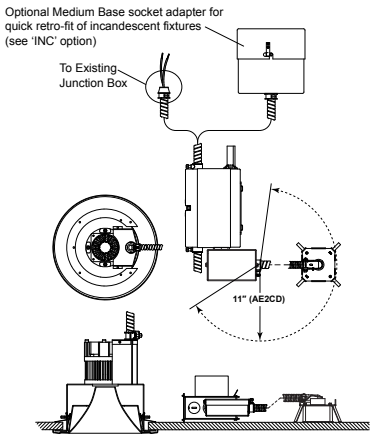

ENERGY STAR® certified

	PRODUCT#	FIXTURE CONFIGURATIONS = ENERGY STAR	
ENERGY STAR	LRT6 (WW)LM (XX)K (V) G4 (YY)CRI (UU) (ZZ) (CC)	Lumen Package:	WW = 08, 13, 15, 17, 23, 28, 33, 40, 45, 55, 65, 75, 80, 85, 90
		CCT:	XX = 27, 30, 35, 40, 50
		Voltage:	V = MVOLT, 120, 277
		CRI:	YY = 80, 90, 97
		Driver:	UU = FD, DALI, EZ1, EZ10, EZB, ZT, GZ1
		Trim Type:	ZZ = HM, HW, P
		Trim Color/Finish:	CC = CS, CSS, CD

LABELS AND LISTINGS

• Tested to UL1598 and CSA C22.2 250 and listed for damp locations • Spacing requirement for 4000 lumen and above: minimum of 4' between fixture centers, 3" overhead clearance, 2' from fixture center to side wall • RoHS compliant • EMI complies with FCC 47, Part 15, Class A • ENERGY STAR® certified, see table for designated products • I.B.E.W. Union made • ARRA Compliant

 © 2017-2023 Acuity Brands Lighting, Inc.

ENGINEERING DATA: 347 Volt available, consult factory

VOLTAGE	120																	
LIGHT ENGINE LUMENS	**800**	**1300**	**1500**	**1700**	**2300**	**2800**	**3300**	**4000**	**4500**	**5000**	**5500**	**6000**	**6500**	**7000**	**7500**	**8000**	**8500**	**9000**
CCT	2700K/3000K/3500K/4000K/5000K																	
INPUT CURRENT	0.076	0.123	0.142	0.167	0.247	0.238	0.280	0.351	0.345	0.381	0.427	0.439	0.483	0.541	0.573	0.607	0.656	0.710
INPUT WATTAGE	9.15	14.70	17.06	19.98	29.64	28.46	33.62	42.14	41.41	45.54	51.08	52.51	58.11	64.59	68.84	72.83	78.87	85.03
INPUT FREQUENCY	50/60Hz	50/60Hz	50/60Hz	50/60Hz	50/60Hz	50/60Hz	50/60Hz	50/60Hz	50/60Hz	50/60Hz	50/60Hz	50/60Hz	50/60Hz	50/60Hz	50/60Hz	50/60Hz	50/60Hz	50/60Hz
THD%	6.67	4.25	3.91	4.07	5.68	5.46	4.43	4.53	6.03	6.03	6.23	6.44	6.54	7.32	7.58	7.75	8.37	8.05
POWER FACTOR	0.994	0.996	0.995	0.995	0.995	0.995	0.997	0.998	0.996	0.996	0.996	0.996	0.996	0.995	0.995	0.996	0.996	0.996
VOLTAGE	277																	
LIGHT ENGINE LUMENS	**800**	**1300**	**1500**	**1700**	**2300**	**2800**	**3300**	**4000**	**4500**	**5000**	**5500**	**6000**	**6500**	**7000**	**7500**	**8000**	**8500**	**9000**
CCT	2700K/3000K/3500K/4000K/5000K																	
INPUT CURRENT	0.036	0.058	0.067	0.077	0.113	0.108	0.131	0.158	0.161	0.175	0.195	0.202	0.221	0.251	0.265	0.268	0.290	0.310
INPUT WATTAGE	9.34	14.69	17.14	20.03	29.49	28.19	33.83	41.68	41.74	45.80	51.02	52.35	57.64	64.22	68.40	71.29	77.27	83.16
INPUT FREQUENCY	50/60Hz	50/60Hz	50/60Hz	50/60Hz	50/60Hz	50/60Hz	50/60Hz	50/60Hz	50/60Hz	50/60Hz	50/60Hz	50/60Hz	50/60Hz	50/60Hz	50/60Hz	50/60Hz	50/60Hz	50/60Hz
THD%	11.84	10.97	11.48	10.49	8.94	9.04	10.48	8.79	9.15	8.07	9.85	11.12	10.97	13.07	12.83	12.96	13.53	12.56
POWER FACTOR	0.925	0.918	0.916	0.934	0.944	0.943	0.932	0.953	0.934	0.943	0.944	0.933	0.942	0.921	0.931	0.957	0.962	0.965

HYPERBOLIC

DELIVERED LUMENS/LUMENS PER WATT (35K 80CRI)

	800 35K		1300 35K		1500 35K		1700 35K		2300 35K		2800 35K		3300 35K		4000 35K		4500 35K	
TRIM/FINISH	Lumens	LPW	Lumens	LPW	Lumens	LPW	Lumens	LPW	Lumens	LPW	Lumens	LPW	Lumens	LPW	Lumens	LPW	Lumens	LPW
LRT6 HM CS	889	97.2	1436	97.7	1643	96.3	1851	92.7	2232	75.3	2822	99.2	3285	97.7	3994	94.8	3966	95.8
LRT6 HM CSS	869	95.0	1404	95.5	1606	94.1	1810	90.6	2181	73.6	2647	93.0	3080	91.6	3745	88.9	3753	90.6
LRT6 HM CD	768	83.9	1240	84.3	1418	83.1	1598	80.0	1926	65.0	2370	83.3	2758	82.0	3353	79.6	3310	79.9
LRT6 HW CS	941	102.8	1519	103.3	1737	101.8	1958	98.0	2360	79.6	2927	102.8	3406	101.3	4142	98.3	4025	97.2
LRT6 HW CSS	906	99.0	1463	99.5	1674	98.1	1886	94.4	2274	76.7	2792	98.1	3249	96.6	3951	93.7	3806	91.9
LRT6 HW CD	868	94.9	1402	95.4	1603	94.0	1807	90.5	2178	73.5	2559	89.9	2978	88.6	3621	85.9	3512	84.8
	5000 35K		**5500 35K**		**6000 35K**		**6500 35K**		**7000 35K**		**7500 35K**		**8000 35K**		**8500 35K**		**9000 35K**	
TRIM/FINISH	Lumens	LPW	Lumens	LPW	Lumens	LPW	Lumens	LPW	Lumens	LPW	Lumens	LPW	Lumens	LPW	Lumens	LPW	Lumens	LPW
LRT6 HM CS	4341	95.3	4806	94.1	4991	95.1	5465	94.0	5982	92.6	6263	91.0	6644	91.2	7335	93.0	7722	90.8
LRT6 HM CSS	4107	90.2	4548	89.0	4723	89.9	5171	89.0	5660	87.6	5926	86.1	6286	86.3	6940	88.0	7306	85.9
LRT6 HM CD	3622	79.5	4011	78.5	4165	79.3	4560	78.5	4992	77.3	5226	75.9	5544	76.1	6121	77.6	6444	75.8
LRT6 HW CS	4405	96.7	4878	95.5	5065	96.5	5546	95.4	6070	94.0	6355	92.3	6742	92.6	7443	94.4	7836	92.2
LRT6 HW CSS	4165	91.5	4612	90.3	4790	91.2	5244	90.2	5740	88.9	6010	87.3	6376	87.5	7039	89.2	7410	87.1
LRT6 HW CD	3844	84.4	4257	83.3	4420	84.2	4840	83.3	5298	82.0	5546	80.6	5884	80.8	6496	82.4	6839	80.4

PARABOLIC

DELIVERED LUMENS/LUMENS PER WATT (35K 80CRI)

	800 35K		1300 35K		1500 35K		1700 35K		2300 35K		2800 35K		3300 35K		4000 35K		4500 35K	
TRIM/FINISH	Lumens	LPW	Lumens	LPW	Lumens	LPW	Lumens	LPW	Lumens	LPW	Lumens	LPW	Lumens	LPW	Lumens	LPW	Lumens	LPW
LRT6 P CS	731	79.9	1180	80.3	1350	79.1	1522	76.2	1834	61.9	2313	81.3	2691	80.1	3272	77.7	3422	82.6
LRT6 P CSS	702	76.7	1133	77.1	1296	76.0	1461	73.1	1761	59.4	2218	77.9	2581	76.8	3138	74.5	3283	79.3
LRT6 P CD	657	71.8	1061	72.2	1214	71.2	1368	68.5	1649	55.6	2080	73.1	2420	72.0	2943	69.8	3171	76.6
	5000 35K		**5500 35K**		**6000 35K**		**6500 35K**		**7000 35K**		**7500 35K**		**8000 35K**		**8500 35K**		**9000 35K**	
TRIM/FINISH	Lumens	LPW	Lumens	LPW	Lumens	LPW	Lumens	LPW	Lumens	LPW	Lumens	LPW	Lumens	LPW	Lumens	LPW	Lumens	LPW
LRT6 P CS	3745	82.2	4147	81.2	4306	82.0	4715	81.1	5161	79.9	5403	78.5	5732	78.7	6328	80.2	6662	78.3
LRT6 P CSS	3593	78.9	3978	77.9	4132	78.7	4523	77.8	4951	76.7	5184	75.3	5499	75.5	6071	77.0	6392	75.2
LRT6 P CD	3470	76.2	3843	75.2	3990	76.0	4369	75.2	4782	74.0	5007	72.7	5312	72.9	5864	74.3	6173	72.6

BEAM SPREAD

TRIM	800-2300 LUMEN	2800-4000 LUMEN	4500-9000 LUMEN
LRT6 HM CS	51°	48°	56°
LRT6 HM CSS	51°	48°	56°
LRT6 HM CD	55°	62°	62°
LRT6 HW CS	71°	68°	70°
LRT6 HW CSS	71°	68°	70°
LRT6 HW CD	71°	68°	70°

	800-4000 LUMEN	4500-9000 LUMEN
LRT6 P CS	34°	44°
LRT6 P CSS	34°	44°
LRT6 P CD	45°	50°

CCT MULTIPLIERS

CCT	08LM-23LM	28LM-40LM	45LM-90LM
2700K	0.97	0.9	0.92
3000K	0.99	0.96	0.97
3500K	1	1	1
4000K	1.04	1.02	1.01
5000K	1.09	1.04	1.05

CRI MULTIPLIERS

CRI	08LM-23LM	28LM-40LM	45LM-90LM
80CRI	1	1	1
90CRI	0.85	0.83	0.85
97CRI	0.79	0.80	0.77

 © 2017-2023 Acuity Brands Lighting, Inc.

PHOTOMETRICS

Distribution Curve | **Distribution Data** | **Output Data** | **Coefficient of Utilization** | **Illuminance Data at 30" Above Floor for a Single Luminaire**

LRT6 13LM 35K + LRT6 HM CS, 3500K LEDs, input watts: 14.70, delivered lumens: 1429.5, LM/W = 97.2, Spacing Criteria: 0.6, test no. PR08171091, tested in accordance to IESNA LM-79.

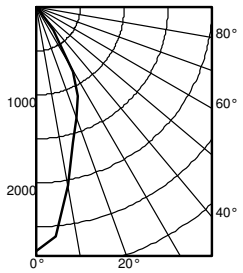

	Ave	Lumens
0	2782	
5	2624	227
15	1599	455
25	1123	506
35	327	229
45	8	10
55	0	0
65	1	1
75	0	1
85	0	0
90	2	

Zone	Lumens	% Lamp
0° - 30°	1188.1	83.1
0° - 40°	1417.4	99.2
0° - 60°	1427.1	99.8
0° - 90°	1429.5	100.0
90° - 180°	0.0	0.0
0° - 180°	1429.5	*100.0

*Efficiency

pf	80%			70%			50%		
pc	20%								
pw	50%	30%	10%	50%	30%	10%	50%	30%	10%
0	119	119	119	116	116	116	111	111	111
1	112	109	107	109	107	106	105	104	102
2	105	101	98	103	100	97	100	97	95
3	99	94	91	97	93	90	95	91	88
4	93	88	84	92	87	84	90	86	83
5	88	83	79	87	82	79	85	81	78
6	83	78	74	83	78	74	81	77	73
7	79	74	70	79	73	70	77	73	69
8	75	70	66	75	70	66	74	69	66
9	72	66	63	71	66	63	70	66	62
10	68	63	60	68	63	60	67	63	59

		50% beam - 31.5°		10% beam - 67.1°	
Mounting Height	Inital FC Center Beam	Diameter	FC	Diameter	FC
8.0	92.0	3.1	46.0	7.3	9.2
10.0	49.5	4.2	24.7	9.9	4.9
12.0	30.8	5.4	15.4	12.6	3.1
14.0	21.0	6.5	10.5	15.2	2.1
16.0	15.3	7.6	7.6	17.9	1.5

LRT6 13LM 35K + LRT6 HW CS, 3500K LEDs, input watts: 14.70, delivered lumens: 1511.9, LM/W = 102.9, Spacing Criteria: 1.1, test no. PR08171095, tested in accordance to IESNA LM-79.

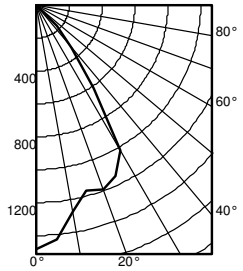

	Ave	Lumens
0	1487	
5	1428	130
15	1164	338
25	1149	519
35	612	395
45	176	129
55	0	1
65	0	0
75	0	0
85	0	0
90	2	

Zone	Lumens	% Lamp
0° - 30°	987.0	65.3
0° - 40°	1381.5	91.4
0° - 60°	1511.5	100.0
0° - 90°	1511.9	100.0
90° - 180°	0.0	0.0
0° - 180°	1511.9	*100.0

*Efficiency

pf	80%			70%			50%		
pc	20%								
pw	50%	30%	10%	50%	30%	10%	50%	30%	10%
0	119	119	119	116	116	116	111	111	111
1	111	108	106	108	106	104	104	102	101
2	103	98	95	101	97	94	98	94	92
3	95	90	86	94	89	85	91	87	84
4	89	83	78	87	82	78	85	81	77
5	82	76	72	82	76	72	80	75	71
6	77	71	66	76	70	66	75	69	66
7	72	66	61	71	65	61	70	65	61
8	67	61	57	67	61	57	66	60	57
9	63	57	53	63	57	53	62	56	53
10	60	53	49	59	53	49	58	53	49

		50% beam - 55.6°		10% beam - 80.2°	
Mounting Height	Inital FC Center Beam	Diameter	FC	Diameter	FC
8.0	49.2	5.8	24.6	9.3	4.9
10.0	26.4	7.9	13.2	12.6	2.6
12.0	16.5	10.0	8.2	16.0	1.6
14.0	11.2	12.1	5.6	19.4	1.1
16.0	8.2	14.2	4.1	22.7	0.8

 © 2017-2023 Acuity Brands Lighting, Inc.

PHOTOMETRICS

Distribution Curve | **Distribution Data** | **Output Data** | **Coefficient of Utilization** | **Illuminance Data at 30" Above Floor for a Single Luminaire**

LRT6 45LM 35K + LRT6 HM CS, 3500K LEDs, input watts: 41.41, delivered lumens: 3937.6, LM/W = 95.1, Spacing Criteria: 0.8, test no. PR08170982, tested in accordance to IESNA LM-79.

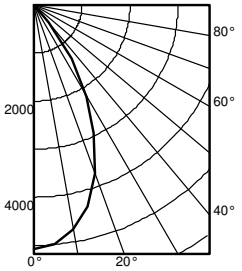

	Ave	Lumens
0	5089	
5	5001	467
15	4335	1198
25	2942	1342
35	1376	826
45	44	104
55	0	0
65	0	0
75	0	0
85	0	0
90	0	

Zone	Lumens	% Lamp
0° - 30°	3007.6	76.4
0° - 40°	3834.0	97.4
0° - 60°	3937.6	100.0
0° - 90°	3937.6	100.0
90° - 180°	0.0	0.0
0° - 180°	3937.6	*100.0

*Efficiency

pf	20%								
pc	80%			70%			50%		
pw	50%	30%	10%	50%	30%	10%	50%	30%	10%
0	119	119	119	116	116	116	111	111	111
1	111	109	107	109	107	105	105	103	102
2	104	100	97	102	99	96	99	96	94
3	97	93	89	96	92	88	93	90	87
4	91	86	82	90	85	82	88	84	81
5	86	80	76	85	80	76	83	79	75
6	81	75	71	80	75	71	79	74	71
7	76	71	67	76	70	67	75	70	66
8	72	67	63	72	66	63	71	66	62
9	68	63	59	68	63	59	67	62	59
10	65	59	56	65	59	56	64	59	56

		50% beam - 46.0°		10% beam - 74.2°	
Mounting Height	Inital FC Center Beam	Diameter	FC	Diameter	FC
8.0	168.2	4.7	84.1	8.3	16.8
10.0	90.5	6.4	45.2	11.3	9.0
12.0	56.4	8.1	28.2	14.4	5.6
14.0	38.5	9.8	19.2	17.4	3.8
16.0	27.9	11.5	14.0	20.4	2.8

LRT6 45LM 35K + LRT6 HW CS, 3500K LEDs, input watts: 41.41, delivered lumens: 3971.7, LM/W = 95.9, Spacing Criteria: 1.2, test no. PR08170983, tested in accordance to IESNA LM-79.

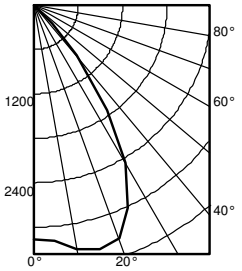

	Ave	Lumens
0	3164	
5	3201	312
15	3422	961
25	3020	1358
35	1723	1044
45	346	296
55	0	1
65	0	0
75	0	0
85	0	0
90	0	

Zone	Lumens	% Lamp
0° - 30°	2630.4	66.2
0° - 40°	3674.7	92.5
0° - 60°	3971.7	100.0
0° - 90°	3971.7	100.0
90° - 180°	0.0	0.0
0° - 180°	3971.7	*100.0

*Efficiency

pf	20%								
pc	80%			70%			50%		
pw	50%	30%	10%	50%	30%	10%	50%	30%	10%
0	119	119	119	116	116	116	111	111	111
1	111	108	106	108	106	104	104	103	101
2	103	99	95	101	97	94	98	95	92
3	95	90	86	94	89	86	91	87	84
4	89	83	79	88	82	78	85	81	77
5	83	77	72	82	76	72	80	75	71
6	77	71	67	76	71	66	75	70	66
7	72	66	62	72	66	61	70	65	61
8	68	61	57	67	61	57	66	61	57
9	64	57	53	63	57	53	62	57	53
10	60	54	50	59	54	50	58	53	50

		50% beam - 60.2°		10% beam - 82.6°	
Mounting Height	Inital FC Center Beam	Diameter	FC	Diameter	FC
8.0	104.6	6.4	52.3	9.7	10.5
10.0	56.2	8.7	28.1	13.2	5.6
12.0	35.1	11.0	17.5	16.7	3.5
14.0	23.9	13.3	12.0	20.2	2.4
16.0	17.4	15.7	8.7	23.7	1.7

PHOTOMETRICS

Distribution Curve | **Distribution Data** | **Output Data** | **Coefficient of Utilization** | **Illuminance Data at 30" Above Floor for a Single Luminaire**

LRT6 90LM 35K + LRT6 HM CS, 3500K LEDs, input watts: 85.03, delivered lumens: 7665.3, LM/W = 90.1, Spacing Criteria: 0.8, test no. PR08170992, tested in accordance to IESNA LM-79.

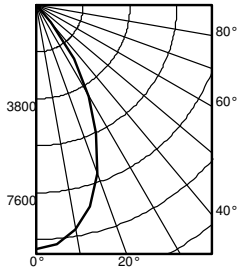

	Ave	Lumens
0	9907	
5	9736	909
15	8440	2333
25	5727	2612
35	2678	1609
45	85	202
55	0	0
65	0	0
75	0	0
85	0	0
90	0	

Zone	Lumens	% Lamp
0° - 30°	5855.1	76.4
0° - 40°	7463.7	97.4
0° - 60°	7665.3	100.0
0° - 90°	7665.3	100.0
90° - 180°	0.0	0.0
0° - 180°	7665.3	*100.0

*Efficiency

pf	20%								
pc	80%			70%			50%		
pw	50%	30%	10%	50%	30%	10%	50%	30%	10%
0	119	119	119	116	116	116	111	111	111
1	111	109	107	109	107	105	105	103	102
2	104	100	97	102	99	96	99	96	94
3	97	93	89	96	92	88	93	90	87
4	91	86	82	90	85	82	88	84	81
5	86	80	76	85	80	76	83	79	75
6	81	75	71	80	75	71	79	74	71
7	76	71	67	76	70	67	75	70	66
8	72	67	63	72	66	63	71	66	62
9	68	63	59	68	63	59	67	62	59
10	65	59	56	65	59	56	64	59	56

		50% beam - 46.0°		10% beam - 74.2°	
Mounting Height	Inital FC Center Beam	Diameter	FC	Diameter	FC
8.0	327.5	4.7	163.8	8.3	32.7
10.0	176.1	6.4	88.1	11.3	17.6
12.0	109.8	8.1	54.9	14.4	11.0
14.0	74.9	9.8	37.5	17.4	7.5
16.0	54.4	11.5	27.2	20.4	5.4

LRT6 90LM 35K + LRT6 HW CS, 3500K LEDs, input watts: 85.03, delivered lumens: 7732.8, LM/W = 90.9, Spacing Criteria: 1.2, test no. PR08170993, tested in accordance to IESNA LM-79.

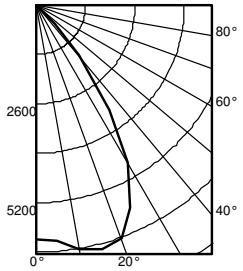

	Ave	Lumens
0	6159	
5	6231	607
15	6662	1870
25	5878	2643
35	3354	2033
45	673	576
55	3	3
65	0	0
75	0	0
85	0	0
90	0	

Zone	Lumens	% Lamp
0° - 30°	5120.3	66.2
0° - 40°	7153.2	92.5
0° - 60°	7732.8	100.0
0° - 90°	7732.8	100.0
90° - 180°	0.0	0.0
0° - 180°	7732.8	*100.0

*Efficiency

pf	20%								
pc	80%			70%			50%		
pw	50%	30%	10%	50%	30%	10%	50%	30%	10%
0	119	119	119	116	116	116	111	111	111
1	111	108	106	108	106	104	104	103	101
2	103	99	95	101	97	94	98	95	92
3	95	90	86	94	89	86	91	87	84
4	89	83	79	88	82	78	85	81	77
5	83	77	72	82	76	72	80	75	71
6	77	71	67	76	71	66	75	70	66
7	72	66	62	72	66	61	70	65	61
8	68	61	57	67	61	57	66	61	57
9	64	57	53	63	57	53	62	57	53
10	60	54	50	59	54	50	58	53	49

		50% beam - 60.2°		10% beam - 82.6°	
Mounting Height	Inital FC Center Beam	Diameter	FC	Diameter	FC
8.0	203.6	6.4	101.8	9.7	20.4
10.0	109.5	8.7	54.7	13.2	11.0
12.0	68.2	11.0	34.1	16.7	6.8
14.0	46.6	13.3	23.3	20.2	4.7
16.0	33.8	15.7	16.9	23.7	3.4

 © 2017-2023 Acuity Brands Lighting, Inc.

PHOTOMETRICS

Distribution Curve | **Distribution Data** | **Output Data** | **Coefficient of Utilization** | **Illuminance Data at 30" Above Floor for a Single Luminaire**

LRT6 13LM 35K + LRT6 P CS, 3500K LEDs, input watts: 14.70, delivered lumens: 1145.7, LM/W = 77.9, Spacing Criteria: 0.5, test no. PR08171097, tested in accordance to IESNA LM-79.

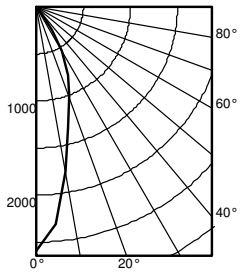

	Ave	Lumens
0	2597	
5	2311	200
15	1325	372
25	802	357
35	301	186
45	22	25
55	4	4
65	0	0
75	0	0
85	2	1
90	0	

Zone	Lumens	% Lamp
0° - 30°	928.9	81.1
0° - 40°	1114.8	97.3
0° - 60°	1144.0	99.9
0° - 90°	1145.7	100.0
90° - 180°	0.0	0.0
0° - 180°	1145.7	*100.0

*Efficiency

pf / pc / pw	80% 50%	80% 30%	80% 10%	20% 70% 50%	20% 70% 30%	20% 70% 10%	50% 50%	50% 30%	50% 10%
0	119	119	119	116	116	116	111	111	111
1	112	109	107	109	107	105	105	104	102
2	105	101	98	103	100	97	100	97	95
3	99	94	91	97	93	90	95	91	88
4	93	88	84	92	87	84	90	86	83
5	88	83	79	87	82	79	85	81	78
6	83	78	74	83	78	74	81	77	74
7	79	74	70	79	74	70	77	73	70
8	75	70	66	75	70	66	74	69	66
9	72	67	63	71	66	63	71	66	63
10	69	63	60	68	63	60	67	63	60

Mounting Height	Inital FC Center Beam	50% beam - 27.9° Diameter	50% beam - 27.9° FC	10% beam - 64.6° Diameter	10% beam - 64.6° FC
8.0	85.9	2.7	42.9	7.0	8.6
10.0	46.2	3.7	23.1	9.5	4.6
12.0	28.8	4.7	14.4	12.0	2.9
14.0	19.6	5.7	9.8	14.6	2.0
16.0	14.2	6.7	7.1	17.1	1.4

LRT6 45LM 35K + LRT6 P CS, 3500K LEDs, input watts: 41.41, delivered lumens: 3403.1, LM/W = 82.2, Spacing Criteria: 0.7, test no. PR08170984, tested in accordance to IESNA LM-79.

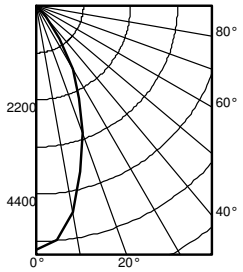

	Ave	Lumens
0	5708	
5	5485	499
15	4000	1105
25	2374	1087
35	942	599
45	90	104
55	4	8
65	0	1
75	0	1
85	0	0
90	0	

Zone	Lumens	% Lamp
0° - 30°	2691.1	79.1
0° - 40°	3290.1	96.7
0° - 60°	3401.6	100.0
0° - 90°	3403.1	100.0
90° - 180°	0.0	0.0
0° - 180°	3403.1	*100.0

*Efficiency

pf / pc / pw	80% 50%	80% 30%	80% 10%	20% 70% 50%	20% 70% 30%	20% 70% 10%	50% 50%	50% 30%	50% 10%
0	119	119	119	116	116	116	111	111	111
1	111	109	107	109	107	105	105	104	102
2	104	101	98	103	99	96	99	97	94
3	98	93	90	97	92	89	94	91	88
4	92	87	83	91	86	83	89	85	82
5	87	82	78	86	81	77	84	80	77
6	82	77	73	82	76	73	80	76	72
7	78	72	69	77	72	68	76	71	68
8	74	68	65	73	68	65	72	68	64
9	70	65	61	70	65	61	69	64	61
10	67	62	58	67	61	58	66	61	58

Mounting Height	Inital FC Center Beam	50% beam - 37.4° Diameter	50% beam - 37.4° FC	10% beam - 69.0° Diameter	10% beam - 69.0° FC
8.0	188.7	3.7	94.3	7.6	18.9
10.0	101.5	5.1	50.7	10.3	10.1
12.0	63.2	6.4	31.6	13.1	6.3
14.0	43.2	7.8	21.6	15.8	4.3
16.0	31.3	9.2	15.7	18.6	3.1

LRT6 90LM 35K + LRT6 P CS, 3500K LEDs, input watts: 85.03, delivered lumens: 6626.1, LM/W = 77.9, Spacing Criteria: 0.7, test no. PR08170994, tested in accordance to IESNA LM-79.

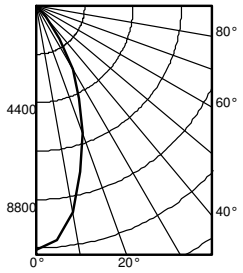

	Ave	Lumens
0	11109	
5	10673	971
15	7785	2150
25	4620	2115
35	1833	1165
45	175	202
55	8	16
65	3	4
75	0	2
85	0	1
90	0	

Zone	Lumens	% Lamp
0° - 30°	5236.8	79.0
0° - 40°	6402.3	96.6
0° - 60°	6619.8	99.9
0° - 90°	6626.1	100.0
90° - 180°	0.0	0.0
0° - 180°	6626.1	*100.0

*Efficiency

pf / pc / pw	80% 50%	80% 30%	80% 10%	20% 70% 50%	20% 70% 30%	20% 70% 10%	50% 50%	50% 30%	50% 10%
0	119	119	119	116	116	116	111	111	111
1	111	109	107	109	107	105	105	104	102
2	104	101	97	103	99	96	99	97	94
3	98	93	90	97	92	89	94	91	88
4	92	87	83	91	86	83	89	85	82
5	87	82	78	86	81	77	84	80	77
6	82	77	73	82	76	73	80	76	72
7	78	72	69	77	72	68	76	71	68
8	74	68	65	73	68	65	72	68	64
9	70	65	61	70	65	61	69	64	61
10	67	62	58	67	61	58	66	61	58

Mounting Height	Inital FC Center Beam	50% beam - 37.4° Diameter	50% beam - 37.4° FC	10% beam - 69.0° Diameter	10% beam - 69.0° FC
8.0	367.2	3.7	183.6	7.6	36.7
10.0	197.5	5.1	98.7	10.3	19.8
12.0	123.1	6.4	61.5	13.1	12.3
14.0	84.0	7.8	42.0	15.8	8.4
16.0	61.0	9.2	30.5	18.5	6.1

 © 2017-2023 Acuity Brands Lighting, Inc.

PERFORMANCE DATA

LUMINAIRES SPACED 2′ FROM WALL

Catalog Number: LRT6 90LM 35K 120 G4 80CRI ZT; LRT6 HWS CSS **Spread:** Single Wall **Test #:** PR08170995

Single Unit						Lamp	Multiple Units On 2′ Centers*			Multiple Units On 3′ Centers*			Multiple Units On 4′ Centers*		
Lateral Distance From Fixture 2′ From Wall						BXRC-35E10K0-D-73-SE	Spaced 2′ From Wall			Spaced 2′ From Wall			Spaced 2′ From Wall		
0′	1′	2′	3′	4′	5′	Distance From Ceiling	CL		CL	CL		CL	CL		CL
41	30	14	7	5	4	1′	70	68	70	53	45	53	47	27	47
89	59	25	11	7	6	2′	142	136	142	109	85	109	99	51	99
120	86	38	15	8	7	3′	200	196	200	147	125	147	132	77	132
88	78	45	20	10	7	4′	184	190	184	126	131	126	103	90	103
49	55	40	22	12	8	5′	141	154	141	91	109	91	67	83	67
33	39	32	22	14	9	6′	113	124	113	76	89	76	56	67	56
25	29	26	19	14	10	7′	94	102	94	64	73	64	48	55	48
20	24	21	16	13	10	8′	78	85	78	55	62	55	42	45	42
15	18	16	13	11	9	9′	61	67	61	44	51	44	33	36	33
10	13	12	10	9	6	10′	45	49	45	34	39	34	25	29	25

LUMINAIRES SPACED 3′ FROM WALL

Catalog Number: LRT6 90LM 35K 120 G4 80CRI ZT; LRT6 HWS CSS **Spread:** Single Wall **Test #:** PR08170995

Single Unit						Lamp	Multiple Units On 3′ Centers*			Multiple Units On 4′ Centers*			Multiple Units On 6′ Centers*		
Lateral Distance From Fixture 3′ From Wall						BXRC-35E10K0-D-73-SE	Spaced 3′ From Wall			Spaced 3′ From Wall			Spaced 3′ From Wall		
0′	1′	2′	3′	4′	5′	Distance From Ceiling	CL		CL	CL		CL	CL		CL
17	14	10	7	5	5	1′	29	20	29	24	22	24	18	11	18
31	26	18	11	8	7	2′	52	51	52	42	38	42	33	19	33
48	39	25	14	10	8	3′	75	71	75	62	52	62	51	25	51
59	49	32	19	11	8	4′	94	91	94	76	67	76	62	35	62
56	49	35	22	14	10	5′	98	98	98	77	74	77	60	41	60
41	42	33	23	16	11	6′	87	93	87	66	73	66	47	44	47
28	32	29	23	16	12	7′	74	83	74	55	65	55	36	43	36
22	26	24	20	15	12	8′	64	74	64	48	57	48	31	37	31
17	20	19	16	13	11	9′	53	61	53	40	47	40	26	31	26
12	15	15	11	11	10	10′	43	46	43	32	37	32	20	24	20

LUMINAIRES SPACED 4′ FROM WALL

Catalog Number: LRT6 90LM 35K 120 G4 80CRI ZT; LRT6 HWS CSS **Spread:** Single Wall **Test #:** PR08170995

Single Unit						Lamp	Multiple Units On 3′ Centers*			Multiple Units On 4′ Centers*			Multiple Units On 6′ Centers*		
Lateral Distance From Fixture 4′ From Wall						BXRC-35E10K0-D-73-SE	Spaced 4′ From Wall			Spaced 4′ From Wall			Spaced 4′ From Wall		
0′	1′	2′	3′	4′	5′	Distance From Ceiling	CL		CL	CL		CL	CL		CL
10	9	8	6	5	5	1′	20	21	20	17	17	17	14	11	14
18	16	13	10	8	7	2′	36	37	36	30	29	30	23	18	23
24	21	16	13	10	8	3′	46	46	46	38	36	38	29	23	29
31	28	21	15	11	9	4′	60	60	60	48	47	48	37	28	37
37	33	25	19	13	10	5′	72	72	72	57	55	57	43	34	43
37	34	28	20	15	12	6′	78	79	78	61	60	61	45	39	45
34	32	27	21	16	12	7′	78	79	78	61	61	61	43	40	43
26	27	24	19	15	13	8′	69	75	69	53	58	53	36	38	36
18	20	20	17	14	12	9′	57	64	57	44	50	44	29	33	29
13	15	16	13	12	10	10′	46	50	46	35	40	35	23	29	23

*Based on minimum of five luminaires. Reflectances: 80, 50, 20. Values are rounded to nearest whole footcandle.

Fixtures tested to IES recommended standard for solid state lighting per LM-79-08. Photometric performance on a single unit represents a baseline of performance for the fixture. Results may vary in the field.

 © 2017-2023 Acuity Brands Lighting, Inc.

PERFORMANCE DATA

LUMINAIRES SPACED 2′ FROM WALL

Catalog Number: LRT6 90LM 35K 120 G4 80CRI ZT; LRT6 WS CS **Spread:** Single Wall **Test #:** PR06151892P

Single Unit						Lamp	Multiple Units On 2′ Centers*			Multiple Units On 3′ Centers*			Multiple Units On 4′ Centers*		
Lateral Distance From Fixture 2′ From Wall						BXRC-35E10K0-D-73-SE	Spaced 2′ From Wall			Spaced 2′ From Wall			Spaced 2′ From Wall		
0′	1′	2′	3′	4′	5′	Distance From Ceiling	CL		CL	CL		CL	CL		CL
63	45	21	10	6	5	1′	107	105	107	81	67	81	72	41	72
97	65	29	13	8	7	2′	160	154	160	121	96	121	108	59	108
108	79	38	16	9	8	3′	189	186	189	139	121	139	122	77	122
83	67	40	21	11	8	4′	170	169	170	121	115	121	99	82	99
53	49	36	23	13	9	5′	138	143	138	97	97	97	74	74	74
34	37	29	22	15	10	6′	111	121	111	77	85	77	59	63	59
25	29	25	20	15	11	7′	95	103	95	66	75	66	51	55	51
20	24	21	17	14	12	8′	81	89	81	58	65	58	45	47	45
15	18	16	14	12	10	9′	65	71	65	47	55	47	36	38	36
10	13	12	11	10	7	10′	48	53	48	37	42	37	27	31	27

LUMINAIRES SPACED 3′ FROM WALL

Catalog Number: LRT6 90LM 35K 120 G4 80CRI ZT; LRT6 WS CS **Spread:** Single Wall **Test #:** PR06151892P

Single Unit						Lamp	Multiple Units On 3′ Centers*			Multiple Units On 4′ Centers*			Multiple Units On 6′ Centers*		
Lateral Distance From Fixture 3′ From Wall						BXRC-35E10K0-D-73-SE	Spaced 3′ From Wall			Spaced 3′ From Wall			Spaced 3′ From Wall		
0′	1′	2′	3′	4′	5′	Distance From Ceiling	CL		CL	CL		CL	CL		CL
28	24	16	10	7	6	1′	47	47	47	39	35	39	30	17	30
39	33	22	14	10	8	2′	66	65	66	54	49	54	42	24	42
50	41	27	17	11	9	3′	82	79	82	67	58	67	54	29	54
55	47	32	20	13	9	4′	92	89	92	74	67	74	59	36	59
49	43	32	22	14	10	5′	91	91	91	72	68	72	54	39	54
41	37	29	22	16	12	6′	83	84	83	66	65	66	48	40	48
32	31	26	21	16	13	7′	75	78	75	59	60	59	41	38	41
23	25	22	19	15	13	8′	64	70	64	49	55	49	34	34	34
17	19	18	15	13	12	9′	52	60	52	40	47	40	28	29	28
12	14	14	11	11	10	10′	42	47	42	32	37	32	21	23	21

LUMINAIRES SPACED 4′ FROM WALL

Catalog Number: LRT6 90LM 35K 120 G4 80CRI ZT; LRT6 WS CS **Spread:** Single Wall **Test #:** PR06151892P

Single Unit						Lamp	Multiple Units On 3′ Centers*			Multiple Units On 4′ Centers*			Multiple Units On 6′ Centers*		
Lateral Distance From Fixture 4′ From Wall						BXRC-35E10K0-D-73-SE	Spaced 4′ From Wall			Spaced 4′ From Wall			Spaced 4′ From Wall		
0′	1′	2′	3′	4′	5′	Distance From Ceiling	CL		CL	CL		CL	CL		CL
17	15	12	9	7	6	1′	34	34	34	27	27	27	21	17	21
23	21	17	13	10	8	2′	48	49	48	39	38	39	30	24	30
28	25	19	15	11	9	3′	55	55	55	45	43	45	34	27	34
33	29	22	16	12	10	4′	64	64	64	52	50	52	40	31	40
35	32	25	19	14	11	5′	72	73	72	57	56	57	43	35	43
34	31	26	20	15	12	6′	73	74	73	58	57	58	42	37	42
31	28	24	19	16	13	7′	71	73	71	56	56	56	41	36	41
27	25	22	17	15	13	8′	66	70	66	52	53	52	38	34	38
21	20	19	15	13	12	9′	57	60	57	44	47	44	32	29	32
15	15	15	12	11	10	10′	45	46	45	35	37	35	25	25	25

*Based on minimum of five luminaires. Reflectances: 80, 50, 20. Values are rounded to nearest whole footcandle.

Fixtures tested to IES recommended standard for solid state lighting per LM-79-08. Photometric performance on a single unit represents a baseline of performance for the fixture. Results may vary in the field.

 © 2017-2023 Acuity Brands Lighting, Inc.

CONTROLS

EXAMPLE
Group Fixture Control*
*Appiication diagram applies for fixtures with eldoLED drivers only.

nPS 80 EZ Dimming/Control Pack (qty: 2 required)
nPODM 2P DX Dual On/Off/Dim Push-Button WallPod
nCM ADCX Daylight Sensor with Automatic Dimming Control
nCM PDT 9 Dual Technology Occupancy Sensor

Description: This design provides a dual on/off/dim wall station that enables manual control of the fixtures in Row A and Row B separately. Additionally, a daylight harvesting sensor is provided so the lights in Row B can be configured to dim automatically when daylight is available. An occupancy sensor turns off all lights when the space is vacant.

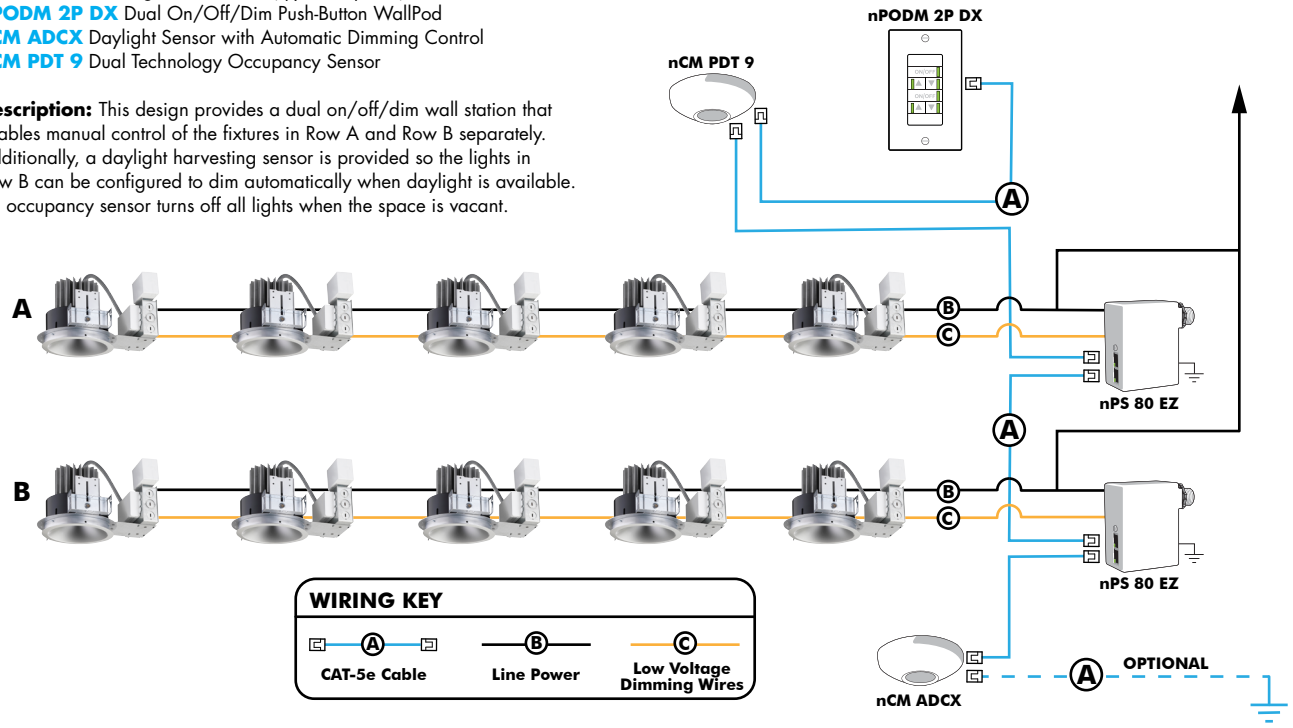

Choose Wall Controls

nLight offers multiple styles of wall controls - each with varying features and user experience.

Push-Button Wallpod
Traditional tactile buttons and LED user feedback

Graphic Wallpod
Full color touch screen provides a sophisticated look and feel

nLight® Wired Controls Accessories:			
Order as separate catalog number. Visit www.acuitybrands.com/products/controls/nlight for complete listing of nLight controls.			
WallPod Stations	**Model number**	**Occupancy sensors**	**Model Number**
On/Off	nPODM (Color)	Small motion 360°, ceiling (PIR/dual Tech)	nCM 9 / nCM PDT 9
On/Off & Raise/Lower	nPOD DX (Color)	Large motion 360°, ceiling (PIR/dual tech)	nCM 10 / nCM PDT 10
Graphic Touchscreen	nPOD GFX (Color)	Wide View (PIR/dual tech)	nWV 16 / nWV PDT 16
Photocell controls	**Model Number**	Wall Switch w/ Raise/Lower (PIR/dual tech)	nWSX LV DX / nWSX PDT LV DX
Dimming	nCM ADCX	**Cat-5 cables (plenum rated)**	**Model Number**
		10', CAT5 10FT	CAT5 10FT J1
		15, CAT5 15FT	CAT5 15FT J1

Capable Luminaire

This item is an A+ capable luminaire, which has been designed and tested to provide consistent color appearance and out-of-the-box control compatibility with simple commissioning.

- All configurations of this luminaire meet the Acuity Brand's specification for chromatic consistency.
- This luminaire is part of an A+ Certified solution for nLight control networks when ordered with drivers marked by a Shaded background*
- This Luminaire is part of an A+ Certified solution for nLight control networks, providing advanced control functionality at the luminaire level, when selection includes driver and control options marked by a shaded background*

To learn more about A+, visit www.acuitybrands.com/aplus.

*See ordering tree for details

 © 2017-2023 Acuity Brands Lighting, Inc.

nLight® AIR Control Accessories:
Order as separate catalog number. Visit www.acuitybrands.com/products/controls/nlightair.

Wall switches	Model number
On/Off single pole	rPODB [color]
On/Off two pole	rPODB 2P [color]
On/Off & raise/lower single pole	rPODB DX [color]
On/Off & raise/lower two pole	rPODB 2P DX [color]
On/Off & raise/lower single pole	rPODBZ DX WH[1]

Notes

1 Can only be ordered with the RES7Z zone control sensor version.

nLight AIR

nLight AIR is the ideal solution for retrofit or new construction spaces where adding communication is cost prohibitive. The integrated nLight AIR rPP20 Power Pack is part of each Indy L-Series Luminaire. These individually addressable controls offer the ultimate in flexibility during initial setup and for space repurposing.

Simple as 1,2,3

1. Install the nLight® AIR fixtures with embedded smart sensor
2. Install the wireless battery-powered wall switch
3. With CL**AIR**ITY app, pair the fixtures with the wall switch and if desired, customize the sensor settings for the desired outcome

nLight AIR rPODB 2P DX Mobile Device

 © 2017-2023 Acuity Brands Lighting, Inc.