LITHONIA LIGHTING®

Catalog Number	
Notes	
Type	

EXRM Running Man LED Sign

FEATURES & SPECIFICATIONS

INTENDED USE — Ideal for applications requiring attractive, quick-installation exit signs and low energy consumption.

CONSTRUCTION — Engineering grade injection-molded, 5VA flame-retardant, high-impact resistant, thermoplastic housing with snap-fit design components for easy installation. Field selectable direction, comes fully packaged with right arrow, left arrow, and pictogram only face plates.

OPTICS — Ultra bright LEDs mounted on printed circuit boards. Low energy consumption. LED lamp operates in normal (AC input) and emergency (DC input) modes. Uniform illumination without shadows or hot spots.

The typical life of the LED lamp is 10 years.

ELECTRICAL — Dual voltage input capability (120/347V), 50/60 Hz.

Battery: Sealed, maintenance-free nickel-cadmium battery delivers a minimum of 90 minutes of illumination. Provides up to 2W of LED remote capacity standard.

Self-diagnostics: Performs monthly 30 second, bi-monthly 30 minute and annual 90 minute testing with multi-status diagnostic functions.

Automatic solid-state charger initiates battery charging, maximizes battery life and automatically recharges after battery discharge.

INSTALLATION — Universal mounting canopy for top or end mount. Back mount standard for single face only. Easily removed mounting knockouts. J-box pattern on back panel. Housing snaps to canopy with four positive-locking tabs.

Ships standard with additional face plates.

LISTINGS — CSA certified to US and Canadian standards. CSA listed for damp location 10°- 40°C (50°F to 104°F). Meets CSA C22.2 No. 141.15. Meets CSA C860. Meets UL924, NFPA 101 (current Life Safety Code), NFPA 70- NEC, FCC Title 47, Part 15, Subpart B and OSHA illumination standards.

WARRANTY — 5-year limited warranty. (Battery is prorated.) Complete warranty terms located at: www.acuitybrands.com/support/warranty/terms-and-conditions

Note: Actual performance may differ as a result of end-user environment and application.
All values are design or typical values, measured under laboratory conditions at 25 °C.
Specifications subject to change without notice.

Specifications

Length: 12 (30.5)

Depth: 2-1/8 (5.4)

Height: 8 (20.3)

Weight: 2 lbs (0.91 kgs)

All dimensions are inches (centimeters) unless otherwise specified.

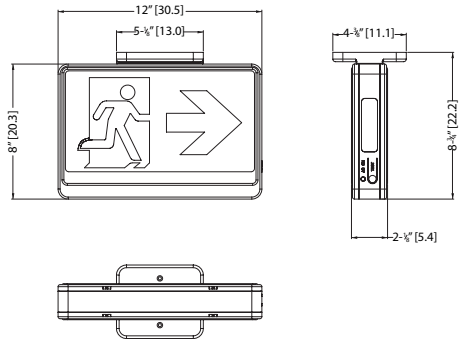

ORDERING INFORMATION For shortest lead times, configure product using **bolded options.**

Example: EXRM W EL

EXRM							
Family	**Housing color**		**Input voltage**		**Operation**		**Options**		
EXRM	**W**	White	**(blank)**	120/347V dual voltage	**(blank)**	AC only	**(blank)**	None
	B	Black			**EL**	Nickel cadmium battery	SD	Self-diagnostics [1]

Accessories: *Order as separate catalog number.*

ELA WG1	Wireguard (back mount only) [2]
ERE W SGL SQ M12	Single, LED indoor remote head, square, ivory white, .75W, 3.6V-12V voltage sensing [3]
ERE W T SQ M12	Twin, LED indoor remote head, square, ivory white, 1.5W, 3.6V-12V voltage sensing [3]
ERE GY SGL WP SQ M12	Single, LED weather-proof remote head, square, gray, 1W, 3.6V-12V voltage sensing [3]
ERE GY T WP SQ M12	Twin, LED weather-proof remote head, square, gray, 2W, 3.6V-12V voltage sensing [3]
ERE W SGL SD SQ M12	Single, LED indoor remote head, square, ivory white, self diagnostics compatible, .75W, 3.6V-12V voltage sensing [4]
ERE W T SD SQ M12	Twin, LED indoor remote head, square, ivory white, self diagnostics compatible, 1.5W, 3.6V-12V voltage sensing [4]
ERE GY SGL SD WP SQ M12	Single, LED weather-proof remote head, square, gray, self diagnostics compatible, 1W, 3.6V-12V voltage sensing [4]
ERE GY T SD WP SQ M12	Twin, LED weather-proof remote head, square, gray, self diagnostics compatible, 2W, 3.6V-12V voltage sensing [4]

Notes

1 Only available with EL operation.

2 See spec sheet ELA-WG for specifications and additional wireguards.

3 See spec sheet ERE.

4 Only available with SD option.

EXRM Running Man LED Sign

SPECIFICATIONS

Electrical Primary Circuit				
	Typical LED life[1]	Supply Voltage	Max Amps	Max Watts
White LED	10 years	120	0.04	4.4
		347	0.01	4.4

BATTERY				
Nickel Cadmium				
Voltage	Typical shelf life[2]	Typical life[3]	Maintenance[3]	Temperature range[4]
9.6	3 years	7-9 years	none	50°F - 104°F (10°C - 40°C)

Notes

1 Based on continuous operation. The typical life of the exit LED lamp is 10 years.

2 At 77°F (25°C).

3 All life safety equipment, including emergency lighting for path of egress must be maintained, serviced and tested in accordance with all National Fire Protection Association (NFPA) and local codes. Failure to perform the required maintenance, service, or testing could jeopardize the safety of occupants and will void all warranties.

4 Optimum ambient temperature range where unit will provide capacity for 90 minutes. Higher and lower temperatures affect life and capacity.

Battery	Remote Capacity*	Maximum # Remote Lamp Heads
9.6V	2 W	2 - ERE W SGL SQ M12
		1 - ERE W T SQ M12
		2 - ERE GY SGL WP SQ M12
		1 - ERE GY T WP SQ M12
		2 - ERE W SGL SD SQ M12*
		1 - ERE W T SD SQ M12*
		2 - ERE GY SGL SD WP SQ M12*
		1 - ERE GY T SD WP SQ M12*

*Only available with SD option

EMERGENCY: One Lithonia Way Conyers, GA 30012 Phone: 800-705-SERV (7378) techsupport-emergency@acuitybrands.com www.lithonia.com
© 2019-2021 Acuity Brands Lighting, Inc. All rights reserved. Rev. 04/23/21