JUNO

Project:

Fixture Type:

Location:

Contact/Phone:

6″ DELUXE UNIVERSAL TC HOUSING

INCANDESCENT LAMPS

TC2 SERIES

PRODUCT DESCRIPTION

TC Housing design for use in non-insulated areas • If installed where insulation is present, the insulation must be pulled back 3″ from all sides of the TC housing.

PRODUCT SPECIFICATIONS

Lamp Lamp ratings based on trim selected – see pages 3-4.

Socket Medium base porcelain with nickel-plated copper screw shell • Drop socket with spring to accommodate certain trim installation.

Trims Trim selection shown on pages 3-4.

Labels UL listed for through-branch wiring, damp locations and IP • Product thermally protected against improper use of lamps or insulation • Union made • UL Listed/CSA certified • Trims 20, 21, 22, 239, 240, 241, 242, 243 and 9900 are wet location approved for covered ceiling applications • Trims 28, 29 are wet location approved for covered ceiling applications, **when used with outdoor rated lamps**.

Testing All reports are based on published industry procedures; field performance may differ from laboratory performance.

Specifications subject to change without notice.

INSTALLATION

Real Nail® Bar Hangers Telescoping, Patented (US Patent D552,969) Real Nail 3 and Real Nail 2 systems permits quick placement of housing anywhere within 24″ O.C. joists or suspended ceilings • Bars scored in two locations for fast, clean breaking, allowing housing installation in tight applications • Bars captive to mounting frame • Edge-mounted for extra strength • Quick-Loc slot (location identified on the mounting frame) and oversized locking set screw lock fixture in position • May be installed either perpendicular or parallel to junction box.

Real Nail 3 Bar Hanger Integral T-bar notch and clip secures housing in suspended ceiling grid – no accessory clips required • 24″ expansion stop allows quick placement of fixture in standard grid spacing • Captive bugle-headed ring shank nail for quick one-step installation and easy removal with claw hammer for fixture relocation • Bar hanger foot contoured to align to bottom of construction joist • Alternate mounting holes included.

Real Nail 2 Bar Hanger (S options) Small bar hanger foot designed to install directly on strapping construction material • Features Real Nail captive nail system for quick one-step installation • G2405 accessory clips required for suspended ceiling installation.

Junction Box Pre-wired junction box provided with (5) ½″ and (1) ¾″ knockouts, (4) Non-metallic sheathed cable connectors and ground wire, U.L. listed/CSA certified for through-branch wiring, maximum 8 No. 12 AWG 90° C branch circuit conductors (4 in, 4 out) • Junction box provided with removable access plates • Knockouts equipped with pryout slots • **W options** are supplied with **push-in electrical connectors** for fast installation.

Mounting Frame 22-gauge die-formed galvanized steel mounting frame • Rough-in section (junction box, mounting frame, housing and bar hangers) fully assembled for ease of installation • Sight lines embossed on mounting frame to allow for easy viewing when aligning fixtures.

Housing TC housing, 22-gauge white painted steel • Housing is vertically adjustable to accommodate up to a 2″ ceiling thickness.

DIMENSIONS

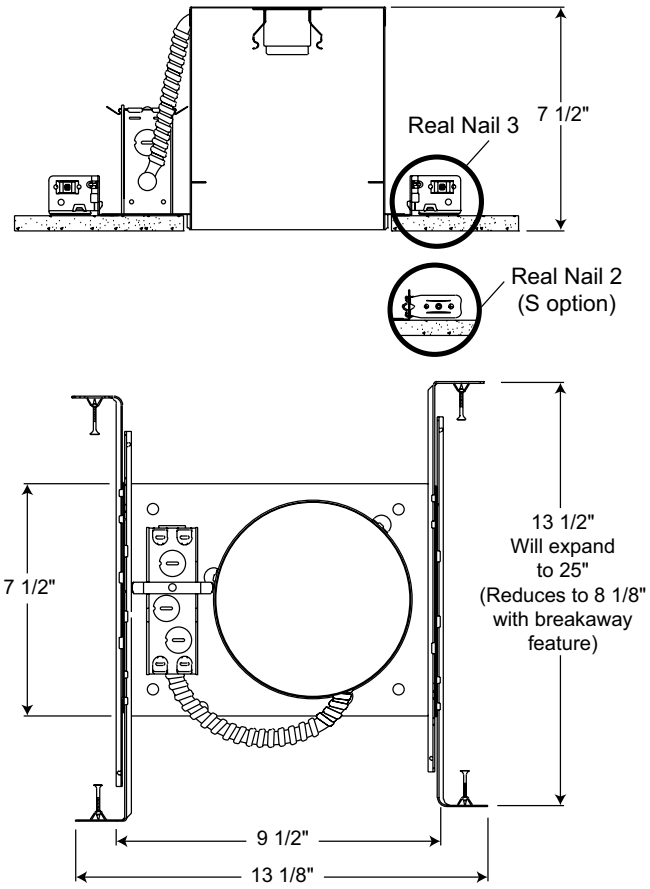

6 7/8″ CEILING CUTOUT

Accessories

Catalog Number	Description
G2405	T-Bar Clips (Set of 4), for S option only

To order, specify catalog number.

PRODUCT CODES

Catalog Number		Input Voltage	Lamp Rating
TC2	6" Incandescent New Construction Non-IC Housing	120V	A19/A21/BR30/BR40/MR16/PAR16/PAR20/PAR30/PAR30L/PAR38/R20/R30 (See pages 3-4 for max. trim rating)
TC2 S	6″ Incandescent New Construction Non-IC Housing with smaller footprint bar hanger (Real Nail 2)	120V	A19/A21/BR30/BR40/MR16/PAR16/PAR20/PAR30/PAR30L/PAR38/R20/R30 (See pages 3-4 for max. trim rating)
TC2 W	6″ Incandescent New Construction Non-IC Housing with push-in electrical connectors for fast, secure installation	120V	A19/A21/BR30/BR40/MR16/PAR16/PAR20/PAR30/PAR30L/PAR38/R20/R30 (See pages 3-4 for max. trim rating)

Housing and trim can be ordered together or separate, but will always ship separately.

 ©2017 Acuity Brands Lighting, Inc.

6″ DELUXE UNIVERSAL TC HOUSING

INCANDESCENT LAMPS

TC2 SERIES

TRIMS/LAMPS

	Catalog Number	Description	Max. Lamp Rating
	23 BWH	6″ Downlight Pinhole with Baffle Trim - Black Baffle, White Trim Ring	50W PAR20/R20
**	**24 BWH**	6" Downlight Tapered Baffle Trim - Black Baffle, White Trim Ring	75W PAR30L, 65W BR30
	24 BSC	6" Downlight Tapered Baffle Trim - Black Baffle, Satin Chrome Trim Ring	
	24 BABZ	6" Downlight Tapered Baffle Trim - Black Baffle, Classic Aged Bronze Trim Ring	
	24 BBL	6" Downlight Tapered Baffle Trim - Black Baffle, Black Trim Ring	
	24 WWH	6" Downlight Tapered Baffle Trim - White Baffle, White Trim Ring	
	25 BWH	6″ Downlight Straight Baffle Trim - Black Baffle, White Trim Ring	85W BR40, 90W PAR38
**	**25 BSC**	6″ Downlight Straight Baffle Trim - Black Baffle, Satin Chrome Trim Ring	
	25 BABZ	6″ Downlight Straight Baffle Trim - Black Baffle, Classic Aged Bronze Trim Ring	
	25 BBL	6″ Downlight Straight Baffle Trim - Black Baffle, Black Trim Ring	
	25 WWH	6″ Downlight Straight Baffle Trim - White Baffle, White Trim Ring	
	26 CWH	6″ Downlight Straight Cone Trim - Clear Alzak®, White Trim Ring	90W PAR38, 85W BR40
**	**26 GWH**	6″ Downlight Straight Cone Trim - Gold, White Trim Ring	
	26 BWH	6″ Downlight Straight Cone Trim - Black, White Trim Ring	
	26 PTSC	6″ Downlight Straight Cone Trim - Pewter, Satin Chrome Trim Ring	
	26 WWH	6″ Downlight Straight Cone Trim - White, White Trim Ring	
	26 HZWH	6″ Downlight Straight Cone Trim - Haze, White Trim Ring	
	26 WHZWH	6″ Downlight Straight Cone Trim - Wheat Haze, White Trim Ring	
	27 CWH	6″ Downlight Tapered Cone Trim - Clear Alzak® Cone, White Trim Ring	75W PAR30L, 65W BR30
**	**27 GWH**	6″ Downlight Tapered Cone Trim - Gold Cone, White Trim Ring	
	27 BWH	6″ Downlight Tapered Cone Trim - Black Cone, White Trim Ring	
	27 PTSC	6″ Downlight Tapered Cone Trim - Pewter Cone, Satin Chrome Trim Ring	
	27 WWH	6″ Downlight Tapered Cone Trim - White Cone, White Trim Ring	
	27 HZWH	6″ Downlight Tapered Cone Trim - Haze Cone, White Trim Ring	
	27 WHZWH	6″ Downlight Tapered Cone Trim - Wheat Haze Cone, White Trim Ring	
	27 WHZABZ	6″ Downlight Tapered Cone Trim - Wheat Haze Cone, Classic Aged Bronze Trim Ring	
	28 BWH ◆◆	6″ Downlight Ultra Trim Baffle Fully Enclosed Trim - Black Baffle, White Trim Ring	75W A19, 100W PAR38, 75W PAR30/30L,
	28 WWH ◆◆	6″ Downlight Ultra Trim Baffle Fully Enclosed Trim - White Baffle, White Trim Ring	85W BR30, 120W BR40
	29 CWH ◆◆	6″ Downlight Ultra Trim Cone Fully Enclosed Trim - Clear Cone, White Trim Ring	100W A19, 100W PAR38, 75W PAR30/30L,
	29 WWH ◆◆	6″ Downlight Ultra Trim Cone Fully Enclosed Trim - White Cone, White Trim Ring	85W BR30, 120W BR40
	230 CBWH	6″ Downlight Economy A-Lamp Reflector with Baffle Trim - Clear with Black, Black Trim Ring	100W A19
	230 CWWH	6″ Downlight Economy A-Lamp Reflector with Baffle Trim - Clear with White, White Trim Ring	
	232 CWH	6″ Downlight A-Lamp Reflector Trim - Clear Alzak®, White Trim Ring	100W A19, 150W A21
	232 GWH	6″ Downlight A-Lamp Reflector Trim - Gold Alzak®, White Trim Ring	100W A19, 150W A21
	232 WWH	6″ Downlight A-Lamp Reflector Trim - White, White Trim Ring	75W A19
	232 HZWH	6″ Downlight A-Lamp Reflector Trim - Haze, White Trim Ring	100W A19, 150W A21
	232 WHZWH	6″ Downlight A-Lamp Reflector Trim - Wheat Haze, White Trim Ring	100W A19, 150W A21
	233 CWH	6″ Downlight A-Lamp Reflector with Black Baffle Trim - Clear Alzak®, White Trim Ring	75W A19
**	**244S BWH**	6″ Downlight Shallow Baffle Trim - Black Baffle, White Trim Ring	75W PAR30/30L, 65W BR30
	244S WWH	6″ Downlight Shallow Baffle Trim - White Baffle, White Trim Ring	
	247S CWH	6" Downlight Shallow Cone Trim - Clear Alzak® Cone, White Trim Ring	75W PAR30/30L, 65W BR30
**	**247S GWH**	6" Downlight Shallow Cone Trim - Gold Alzak® Cone, White Trim Ring	
	247S BWH	6" Downlight Shallow Cone Trim - Black Alzak® Cone, White Trim Ring	
	247S HZWH	6" Downlight Shallow Cone Trim - Haze Cone, White Trim Ring	
	247S WHZWH	6" Downlight Shallow Cone Trim - Wheat Haze Cone, White Trim Ring	
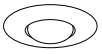	**250 WH**	6″ Downlight Open Frame Trim - White	65W BR30
	250 SC	6″ Downlight Open Frame Trim - Satin Chrome	
	250 ABZ	6″ Downlight Open Frame Trim - Classic Aged Bronze	
	251 WH	6″ Downlight Open Frame Trim - White	120W BR40, 250W R40 Heat Lamp
**	**254 BWH**	6″ Downlight Deep Baffle Trim - Black Baffle, White Trim Ring	75W PAR30,
	254 WWH	6″ Downlight Deep Baffle Trim - White Baffle, White Trim Ring	100W PAR38

Trim Size: 7⅝″ O.D. (except Cat. Nos. 228, 229, 241, 9024 - 8″ O.D., Cat. No. 9702 - 7¾″ O.D.).

* Use dimmers specifically designed for low voltage magnetic transformers.

Alzak is a registered trademark of Alcoa Corp.
Note: In Canada when insulation is present, Type IC fixtures must be used.

◆ UL Listed for use in wet location.

◆◆ UL Listed for use in wet location with outdoor rated lamp.

** NOTE: TR6 Trim Ring compatible with 24, 25, 26, 27, 244S, 247S, 254, 257, 264, 267, 9900 trims.

 ©2017 Acuity Brands Lighting, Inc.

6″ DELUXE UNIVERSAL TC HOUSING

INCANDESCENT LAMPS

TC2 SERIES

TRIMS/LAMPS (cont.)

	Catalog Number	Description	Max. Lamp Rating
**	257 CWH	6″ Downlight Deep Cone Trim - Clear Alzak® Cone, White Trim Ring	75W PAR30, 100W PAR38
	257 BWH	6″ Downlight Deep Cone Trim - Black Alzak® Cone, White Trim Ring	
	257 GWH	6″ Downlight Deep Cone Trim - Gold Alzak® Cone, White Trim Ring	
	257 HZWH	6″ Downlight Deep Cone Trim - Haze Cone, White Trim Ring	
	257 WHZWH	6″ Downlight Deep Cone Trim - Wheat Haze Cone, White Trim Ring	
	224 BWH	6″ Adjustable Gimbal Ring in Baffle Trim - Black Baffle, White Trim Ring	75W PAR38/3 Side Prong
	224 WWH	6″ Adjustable Gimbal Ring in Baffle Trim - White Baffle, White Trim Ring	
		Can also be used w/med. screw base lamps	
	226 BWH	6″ Adjustable Cylinder Spotlight in Baffle Trim - Black Baffle, White Trim Ring	60W PAR16
	226 WWH	6″ Adjustable Cylinder Spotlight in Baffle Trim - White Baffle, White Trim Ring	
	228 WH	6″ Adjustable Regressed Eyeball Trim - White	50W PAR20/R20
	229 WH	6" Adjustable Regressed Eyeball Trim - White	75W PAR30L, 65W BR30
	229 SC	6" Adjustable Regressed Eyeball Trim - Satin Chrome	
	229 ABZ	6" Adjustable Regressed Eyeball Trim - Classic Aged Bronze	
	229 BL	6" Adjustable Regressed Eyeball Trim - Black	
	248 WWH	6″ Adjustable Regressed Eyeball in Baffle Trim - White Baffle, White Trim Ring	50W PAR20/R20
	249 BWH	6″ Adjustable Regressed Eyeball in Baffle Trim - Black Baffle, White Trim Ring	75W PAR30L, 65W BR30
	249 WWH	6″ Adjustable Regressed Eyeball in Baffle Trim - White Baffle, White Trim Ring	
**	264 BWH	6" Adjustable Tapered Baffle Trim - Black Baffle, White Trim Ring	75W PAR30
	264 WWH	6" Adjustable Tapered Baffle Trim - White Baffle, White Trim Ring	
**	267 CWH	6″ Adjustable Tapered Cone Trim - Clear Alzak® Cone, White Trim Ring	75W PAR30
	267 GWH	6″ Adjustable Tapered Cone Trim - Gold Alzak® Cone, White Trim Ring	
	267 BWH	6″ Adjustable Tapered Cone Trim - Black Alzak® Cone, White Trim Ring	
	267 HZWH	6″ Adjustable Tapered Cone Trim - Haze Cone, White Trim Ring	
	267 WHZWH	6″ Adjustable Tapered Cone Trim - Wheat Haze Cone, White Trim Ring	
	20 WH ◆	6″ Lensed Albalite Trim - White	40W A19
	20 PW ◆	6″ Lensed Albalite Trim - Plastic White	
	240 WH ◆	6″ Lensed Albalite with Reflector Trim - White	60W A19
	240 PW ◆	6″ Lensed Albalite with Reflector Trim - Plastic White	
	21 WH ◆	6″ Lensed Drop Opal Trim - White	40W A19
	21 PW ◆	6″ Lensed Drop Opal Trim - Plastic White	
	241 WH ◆	6″ Lensed Drop Opal with Reflector Trim - White	60W A19
	241 PW ◆	6″ Lensed Drop Opal with Reflector Trim - Plastic White	
	242 WH ◆	6″ Lensed Frosted Lens with Clear Center Trim - White	75W PAR38, 60W PAR38IR
	242 SC ◆	6″ Lensed Frosted Lens with Clear Center Trim - Satin Chrome	
	242 ABZ ◆	6″ Lensed Frosted Lens with Clear Center Trim - Classic Aged Bronze	
	22 WH ◆	6″ Lensed Fresnel Trim - White	40W A19
	239 WH ◆	6″ Lensed Frosted Lens Trim - White	40W A19
	261 BWH	6″ Wall Wash Scoop Trim -	40W A19
	261 WWH	6″ Wall Wash Scoop Trim -	
	243 WH ◆	6″ Decorative Swirled Etched Opal Glass Trim - White	60W A19
	9324 SC	6″ Decorative Luminous Disc Frosted Trim - Satin Chrome	65W BR30
	9702	6″ Decorative Luminous Collar Frosted Trim - Luminous Collar (Frosted)	75W BR30
	9024 WWH	6″ Decorative Octagonal Trim - White, White Trim Ring	65W BR30
	9524 SC	6″ Decorative Metal Band Trim - Satin Chrome	65W BR30
**	9900 WH ◆	6″ Decorative Fluted Drop Opal Trim - White	60W A19

LOW VOLTAGE TRIMS WITH TRANSFORMER*

Catalog Number	Description	Max. Lamp Rating
424 BWH	6″ Adjustable Pinhole with Baffle Trim - Black Baffle, White Trim Ring	35W MR16
427 WWH	6″ Adjustable Cylinder Spotlight in Baffle Trim - White Baffle, White Trim Ring	50W MR16

Trim Size: 7⅝″ O.D. (except Cat. Nos. 228, 229, 241, 9024 - 8″ O.D., Cat. No. 9702 - 7¾″ O.D.).

* Use dimmers specifically designed for low voltage magnetic transformers.

Alzak is a registered trademark of Alcoa Corp.
Note: In Canada when insulation is present, Type IC fixtures must be used.

◆ UL Listed for use in wet location.

◆◆ UL Listed for use in wet location with outdoor rated lamp.

** NOTE: TR6 Trim Ring compatible with 24, 25, 26, 27, 244S, 247S, 254, 257, 264, 267, 9900 trims.

 ©2017 Acuity Brands Lighting, Inc.