LDN Family

Best Value in Downlighting

Meet the Downlights

The LDN Family is known as the best value in downlighting. Their general illumination performance provides a glare-free experience without compromising efficacy. With multiple aperture sizes, shapes, forms, drivers, and control options, you have a simple and flexible solution for any new construction project.

LDN3

Round or Square Open and Wall Wash

Discrete downlights with easy install-from-below design delivering up to 1,500 lumens

LDN4

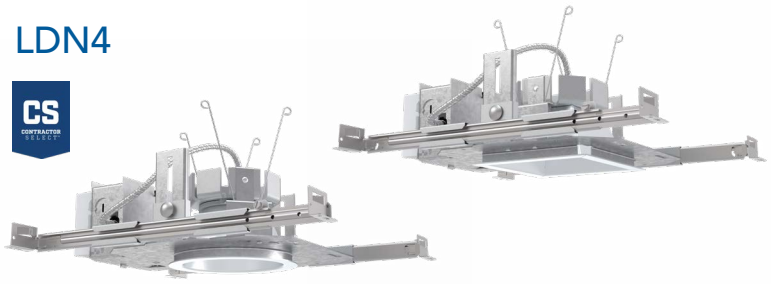

Round or Square Open and Wall Wash

Most popular 4" open downlight and wall wash for everyday general illumination delivering up to 4,000 lumens

LDN6

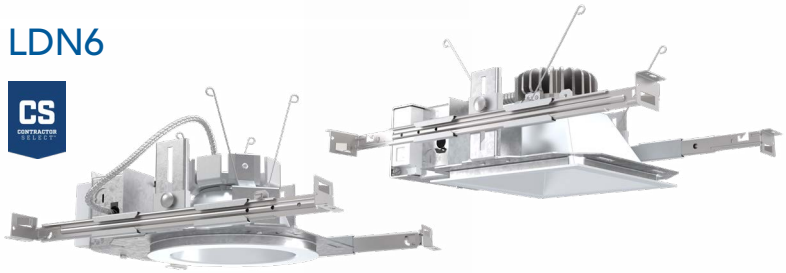

Round or Square Open and Wall Wash

The heart of the LDN Family and the best value in commercial downlighting delivering up to 5,000 lumens

LDN8

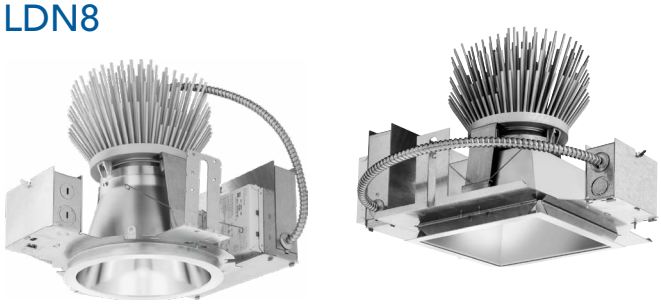

Round or Square Open and Wall Wash

Most powerful downlight on the market delivering up to 20,000 lumens

The newest member of the LDN Family provides new driver capabilities including switchable CCTs and lumens, and multiple dimming options. Save on energy consumption, labor costs, and time, while giving customers and their occupants the lighting they deserve.

LDN4 Switchable

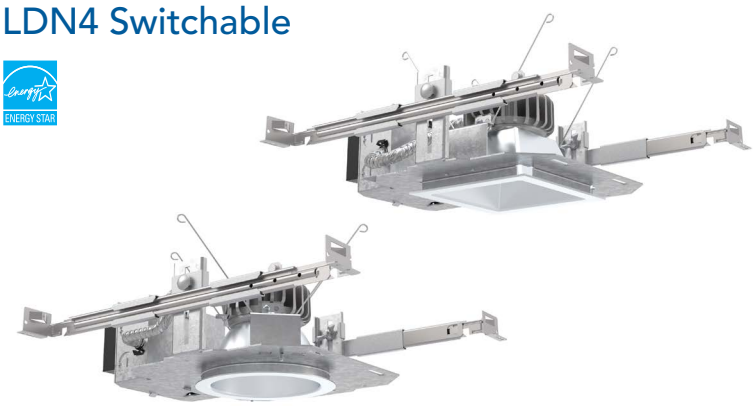

Round or Square Open and Wall Wash

LDN6 Switchable

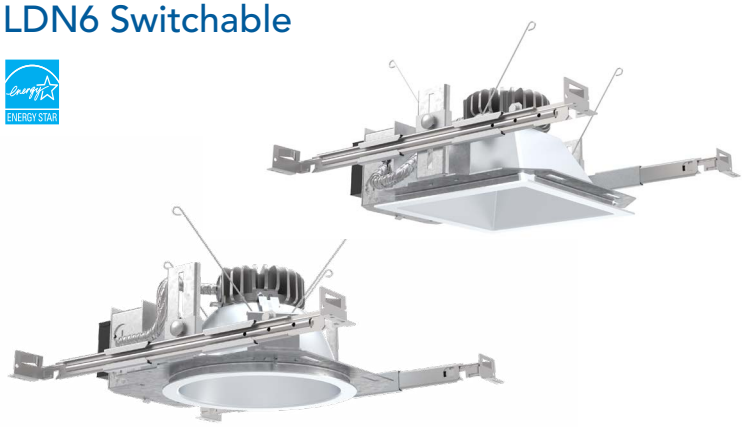

Round or Square Open and Wall Wash

LDN8 Switchable

Round Open

Switchable CCTs

- 3000K
- 3500K
- 4000K
- 5000K

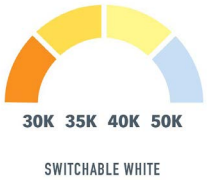

Switchable Lumens

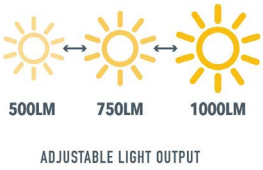

- 500, 750, 1000 LM
- 1000, 1500, 2000 LM
- 2000, 2500, 3000 LM

Dimming Options

MVOLT (127-277) 0-10V
phase dimming (120V)
all-in-one driver
(DALI driver also available)

Cost Effective.
Glare-Free Solution.

LITHONIA LIGHTING

Don't Just Retrofit, Relight for Real ROI

LDNRV Retrofit Kits

Relight is simple with Lithonia Lighting® LDNRV. Our downlight provides the flexibility you need to improve lighting quality while saving money and time. Now, you can achieve a long-lasting solution without compromising a glare-free experience.

- Self-centering installation with vertical springs
- Broadest aperture offering for retrofitting 4", 5", 6", 7", 8", 9", and 10" downlights
- Up to 12,000 lumens delivered

Energy Savings **Low Labor Costs** **Environmental Impact**

Give your customer and their occupants the lighting they deserve. Create real ROI and sustainability in your downlighting.

Meet the Cylinders

Cable

Pendant

Surface Mount

Wall Mount

Multiple mounting options

Same glare-free experience

Matches seamlessly with the rest of the LDN downlights

Available in 10 standard colors and any RAL color

LDN4

LDN6

LDN8

Endless Configurations. One Consistent Look.

Flexible. Reliable.

LITHONIA LIGHTING®

Controls Made Easy

nLIGHT

Networked Lighting Controls Platform

Simple

Embedded nLight wired or wireless lighting controls available within the LDN Family.

Reliable

nLight embedded fixtures will aid in code compliance and reduce energy costs.

Scalable

nLight platform can scale to a building or campus-wide network system when you're ready.

Products include: LDN3, LDN4, LDN4SQ, LDN6, LDN6SQ, LDN8, LDN8SQ, LDNRV Retrofit Kits, LDN4 Cylinder, LDN6 Cylinder, LDN8 Cylinder

sensorswitch

WIRELESS PAIRING WITH *JUST ONE TOUCH*

JOT is a wireless, app-free solution for single room lighting control. The JOT enabled solution shortens the installation and pairing process into these three simple steps:

Power

Install JOT enabled fixtures and controls as instructed. No 0-10V wires needed!

Pair

Insert the pairing tool into the pinhole. Then, press and hold any button for 6 seconds. Once paired, each fixture will individually dim to 10% brightness.

Play

Products will be fully functional once all fixtures return to 100% brightness.

Products include: LDN4, LDN4SQ, LDN6, LDN6SQ

JOT JUST ONE TOUCH

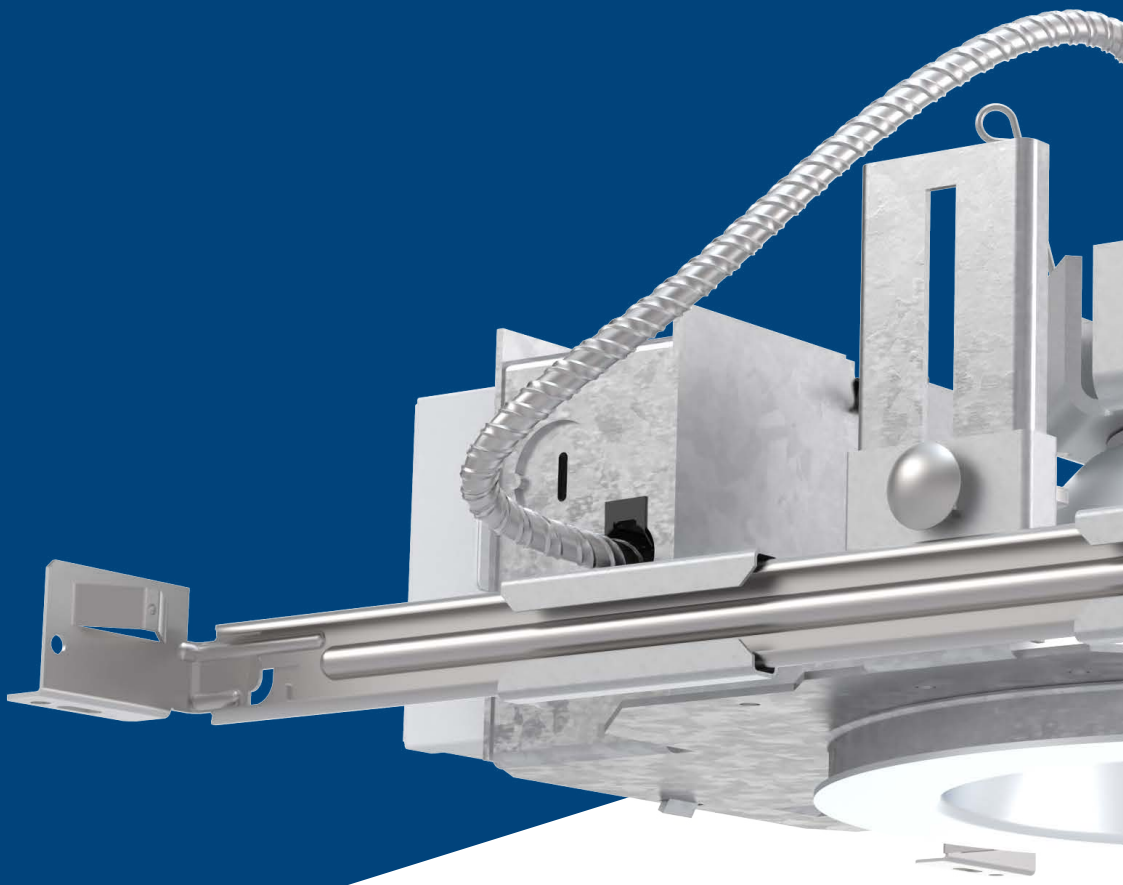

Visit www.lithonia.com for more information

One Lithonia Way | Conyers, Georgia 30012 | Phone: 800-315-4963 | www.acuitybrands.com
©2020 Acuity Brands Lighting, Inc. All rights reserved. | LL_543816.01_0820