TOP VIEW

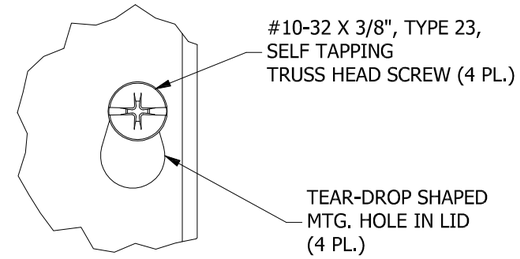


DETAIL C

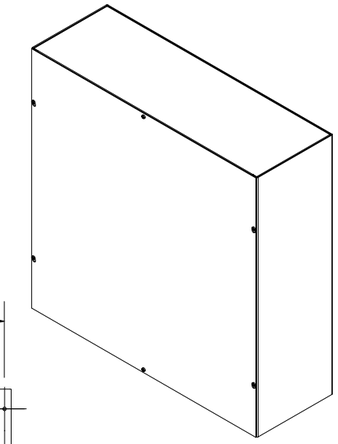

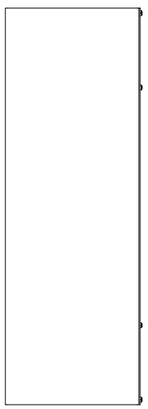

LEFT SIDE VIEW

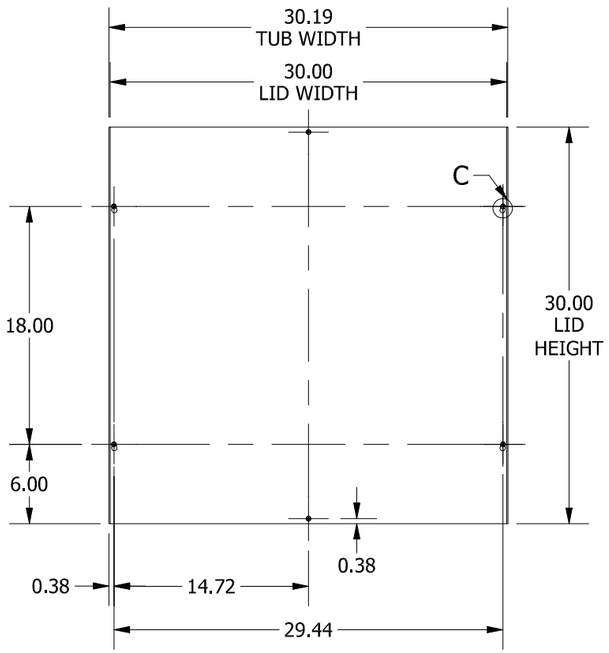


FRONT VIEW

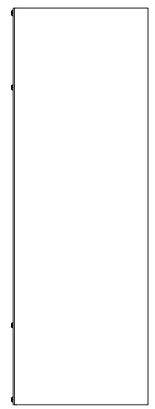

RIGHT SIDE VIEW

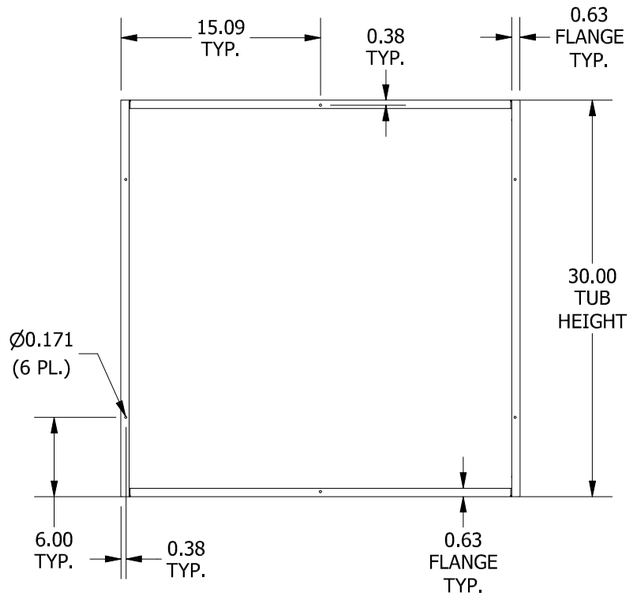


FRONT VIEW LID REMOVED

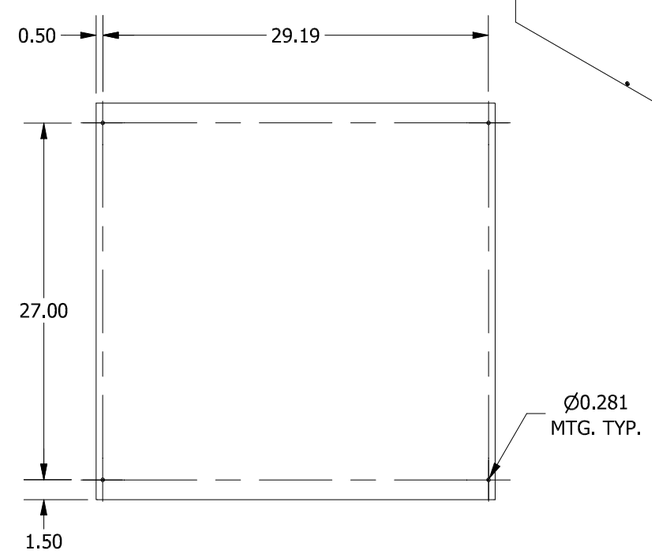


BACK VIEW

BOTTOM VIEW

PART#: SC303010GNK
(DATA SUBJECT TO CHANGE WITHOUT NOTICE)

THIS DRAWING IS PROPERTY OF HUBBELL INC. WIEGMANN
ALL INFORMATION IS PROPRIETARY AND NOT TO BE DUPLICATED