Wallplates

Blank Wallplates

HUBBELL

Features

- Reinforcement ribs for extra strength
- High-impact, self-extinguishing nylon material
- Captive screw feature holds mounting screw in place

Ordering Information

Description	Color	Catalog Number	UPC
1-Gang, 1 Blank, Box Mount	Office White	**NP13OW**	883778102943

Listings

UL Listed
CSA Certified

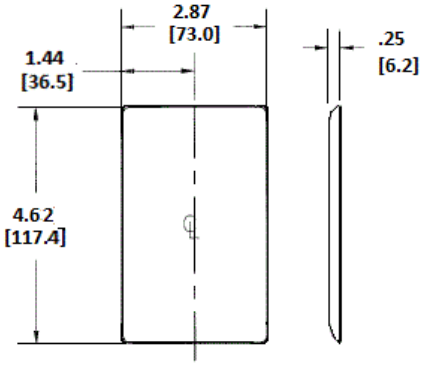

Specifications

Material	Nylon
Size	1-Gang
Thickness	.06 in. (1.5).
Mounting Screw	Steel
Height	4.63" (117.6)
Width	2.88" (73.2)

Online Resources

Customer Use Drawing
eCatalog

Dimensions in Inches (mm)

Hubbell Wiring Device-Kellems • Hubbell Incorporated (Delaware) • 40 Waterview Drive • Shelton, CT 06484
Phone (800) 288-6000 • Fax (800) 255-1031 • Specifications subject to change without notice.

HUBBELL®
Wiring Device-Kellems