Hubbell-PRO

100/125 A, 120/208 VAC, 4-POLE, 5-WIRE

Watertight Inlet

Features

- IP67 environmental ratings
- Impact and corrosion resistant insulated non-metallic housing
- Sequential contact engagement to prevent a momentary over-voltage
- Color coded housings provide quick identification of mating devices
- Shrouded pins to protect from impact and abuse

Ordering Information

Description	Heavy Duty Products, IEC Pin and Sleeve Color	UPC	Catalog Number
		783585676555	**C5100B9WA**

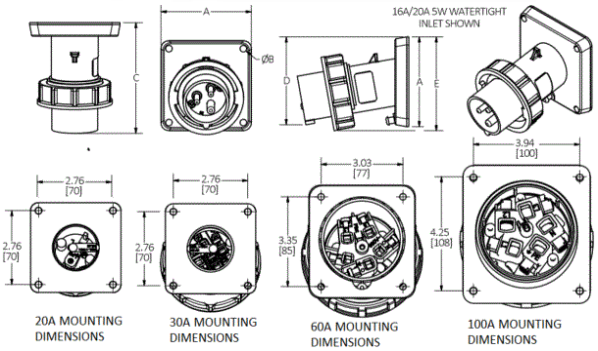

Listings

All constructions are UL Listed & cUL Listed
FileE14632
UL1686 Standard for Pin & Sleeve Configurations
VDE, CE

Specifications

Application	High Ampacity Connections
Connection	Pressure Screw Terminal
Wire Size	#4AWG to #1AWG
Material	PBT
Mounting	Screw Mount

Complementary Products

Complementary Products	Adapter Plate, Back Box

Performance

Electrical	
Dielectric Voltage	Withstand 3000V AC
Max. Working Voltage	600V AC RMS
Mechanical	
Impact Resistance	Per CSA C22.2 No. 182.1 / UL1682
Product Identification	Identification and ratings are marked on device housing
Terminal Identification	Terminals identified in accordance with North American and IEC conventions
Environmental	
Flammability	HB
Ingress Protection	IP67
Moisture Resistance	IEC 60309-1
Temperature Rating	Maximum Continuous: 75° C; Minimum Continuous: -40° C w/o impact, -25° with impact.

Online Resources

Customer Sales Drawings
eCatalog
Installation Instructions

Dimensions in Inches (mm)

Hubbell Wiring Device-Kellems • Hubbell Incorporated (Delaware) • 40 Waterview Drive • Shelton, CT 06484
Phone (800) 288-6000 • Fax (800) 255-1031 • Specifications subject to change without notice.

Wiring Device-Kellems