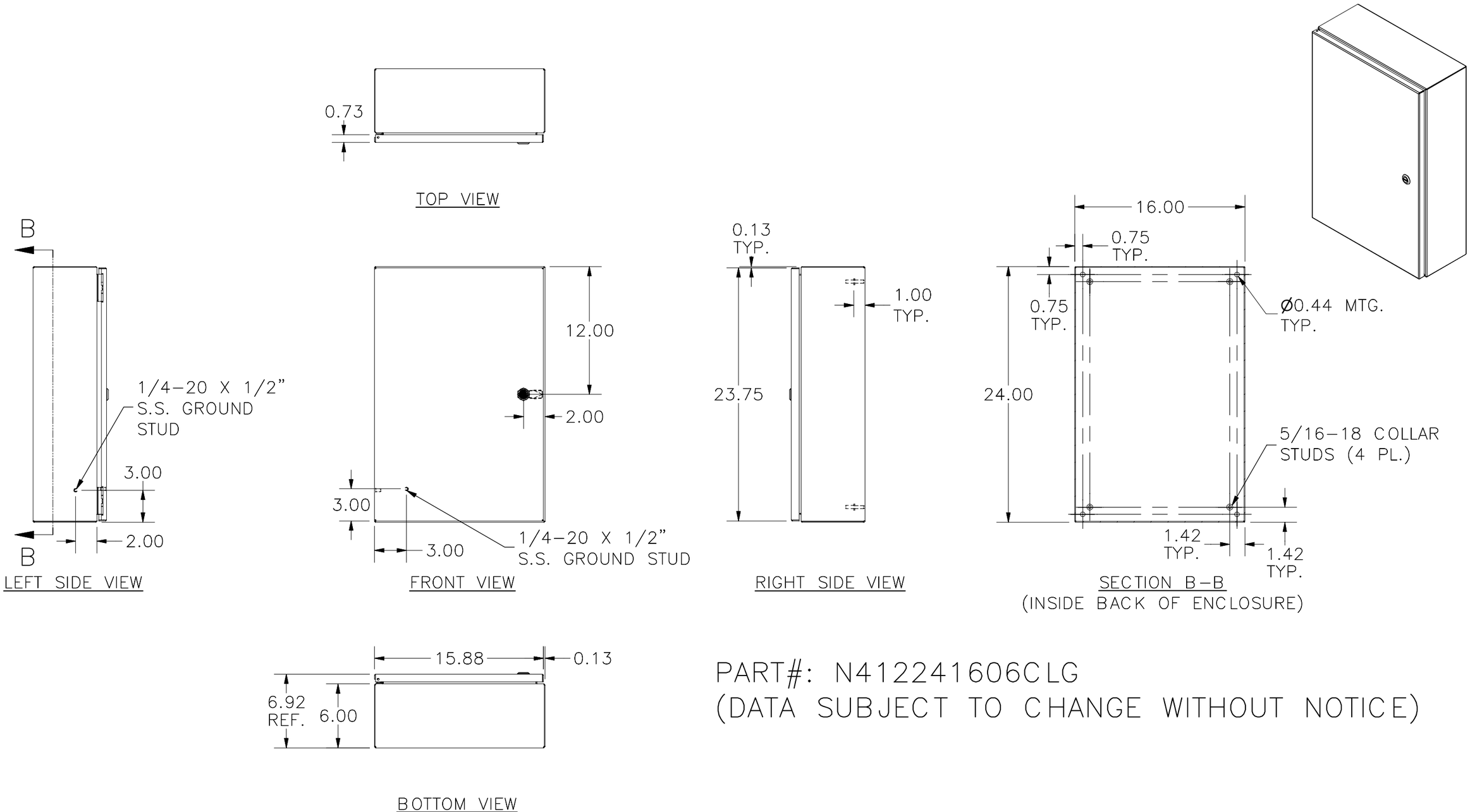

PART#: N412241606CLG
(DATA SUBJECT TO CHANGE WITHOUT NOTICE)