OptiChannel

FPR Rack Mount Enclosures

Pre-Punched Enclosure, FSP Panel Style

Features

- Swing Out Style Hinged Inner Drawer

Ordering Information

Description	Color	Catalog Number	UPC
Pre-Punched Enclosure, FSP Panel Style Unloaded	Black	**FPR3SP**	662620813264

Listings

EIA/ECA-310-E
TIA-569-D

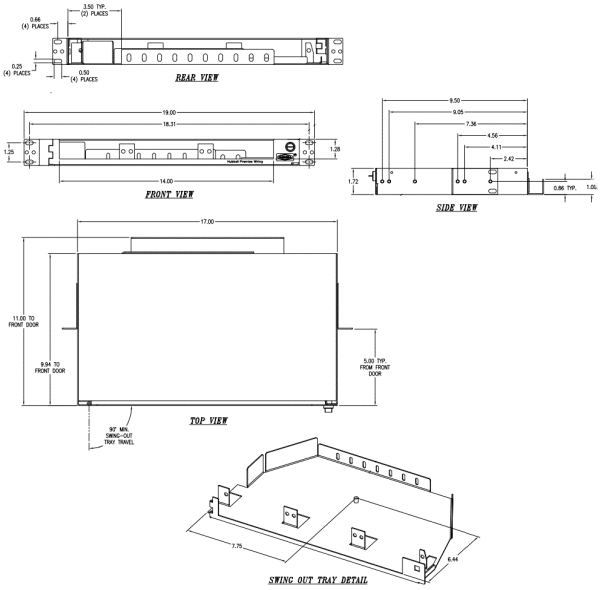

Specifications

Rack Units	1
Panel Capacity	3
Maximum LC Port Capacity	72

Online Resources

Customer Use Drawing
eCatalog

Hubbell Premise Wiring