369987g 1 06.28.19

Caséta Wireless Load Controls

The Caséta Wireless family of dimmers, switches, and fan controls can be controlled directly and remotely when paired with Pico remote controls providing a system that delivers convenience and ease of installation.

Caséta Wireless dimmers, switches, and fan controls use Lutron patented Clear Connect RF Technology which enables wireless communication with Pico remote controls, Caséta motion sensors, and the Lutron Smart Bridge and Smart Bridge PRO.

Caséta Wireless
In-Wall Switches

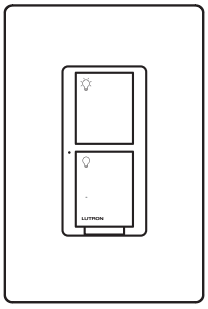

Caséta Wireless
In-Wall Dimmers

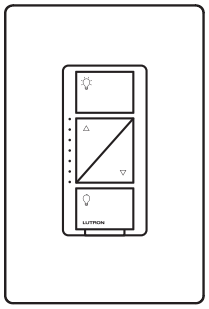

Caséta Wireless
ELV+ Dimmer

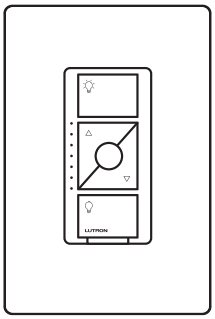

Caséta Wireless
Plug-In Lamp Dimmer

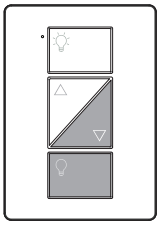

Caséta Wireless
Fan Control

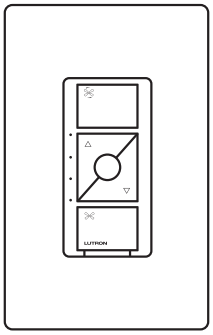

Features

- Works with Pico remote control
- Works with Caséta motion sensor
- Works with the Lutron App (via a Smart Bridge or Smart Bridge PRO)[1]
- Lutron patented Clear Connect RF Technology works through walls and floors
- Includes Front Accessible Service Switch (FASS) for safe lamp replacement
- Works with Lutron Radio Powr Savr occupancy and vacancy sensors in standalone applications (sensors do not work with Smart Bridge or Smart Bridge PRO)

Note: Certain models or load types will require a neutral connection (see Load Types and Capacity sections).

[1] The Lutron App is required for setup and usage with the Smart Bridge and Smart Bridge PRO. The Lutron App is compatible with iOS® devices version 8.0 or later and Android™ devices 4.0 or later.

Job Name:	Model Numbers:
Job Number:	

369987g 2 06.28.19

Specifications

Regulatory Approvals

- cULus Listed
- NOM Certified
- FCC Approved. Complies with the limits for a Class B digital device, pursuant to Part 15 of the FCC Rules
- Industry Canada Certified
- IFTEL Certified
- NEMA 410 (-5ANS, -6ANS, -5WS, -10NXD, -5NE)

Power

Operating voltage:

- 120 V∼ 50/60 Hz: -3PCL, -6WCL, -10NXD, -6ANS, -5ANS, -5NE, -FSQN
- 120/277 V∼ 50/60 Hz: -5WS-DV

Key Design Features

- Tested to withstand electrostatic discharge without damage or memory loss, in accordance with IEC 61000-4-2.
- Tested to withstand surge voltages without damage or loss of operation, in accordance with IEEE C62.41-1991 Recommended Practice on Surge Voltages in Low-Voltage AC Power Circuits.
- Load controls always operate locally and do not require system control.
- Power failure memory: should power be interrupted, the control will return to its previously set level prior to the interruption when power is restored.
- PD-5WS-DV, PD-5ANS, PD-6ANS, and PD-10NXD use conventional 3-way wiring.
- Uses Lutron Claro wallplates or designer-style wallplates from other manufacturers. Wallplates are sold separately.
- Lutron Claro wallplates snap on with no visible means of attachment.
- Requires a 1-gang U.S. wallbox. 3½ in (89 mm) depth recommended, 2¼ in (57 mm) depth minimum[1].
- Green status LED(s) to indicate load status.
- PD-FSQN provides 4 quiet fan speeds plus OFF for a single ceiling fan.

[1] PD-FSQN requires 2½ in (63½ mm) minimum depth

System Communications and Capacity

- Caséta Wireless in-wall switches, dimmers, and fan controls communicate with Pico remote controls, Caséta motion sensors, and the Lutron Smart Bridge/Smart Bridge PRO through Radio Frequency (RF).
- The Caséta Wireless in-wall switches, dimmers, and fan controls must be located within 60 ft (18 m) line-of-sight or 30 ft (9 m) through walls of a Lutron Smart Bridge, Smart Bridge PRO, or Caséta Wireless Repeater.
- The Caséta Wireless in-wall switches, dimmers, and fan controls must be located within 60 ft (18 m) line-of-sight or 30 ft (9 m) through walls of Pico remote controls or Caséta motion sensors (with no Smart Bridge installed).

Device limits

- Pico remote controls and Caséta motion sensors: up to 10 devices (total) may be paired to each Caséta Wireless in-wall switch/dimmer (with no Smart Bridge installed).
- Smart Bridge or Smart Bridge PRO system: up to 75 total wireless devices (Caséta wireless dimmers/switches, Pico remote controls, Caséta motion sensors, and shades) are supported per system. Smart Bridge or Smart Bridge PRO counts as one device. The Caseta Wireless repeater counts as one device.

Environment

- Ambient operating temperature: 32 °F to 104 °F (0 °C to 40 °C), 0% to 90% humidity, non-condensing. Indoor use only.
- PD-5WS-DV, PD-5ANS, PD-6ANS, and PD-10NXD can be used with mechanical switch in 3-way applications.

Job Name:	Model Numbers:
Job Number:	

Features

	PRO Dimmer PD-10NXD	Plug-In Dimmer PD-3PCL	In-Wall Dimmer PD-6WCL	ELV+ Dimmer PD-5NE	2-wire Switch PD-5WS-DV	Neutral Switch PD-5ANS, PD-6ANS	Fan Control PD-FSQN
Simple two-wire installation (no neutral wire required)	√[1]		√		√		
Capable of dimming loads	√	√	√	√			
Favorite button (user defined one-touch preset level)				√			√
Works with Hi-lume 1% 2-Wire LED Drivers (Forward-phase only)	√		√	√	√	√	
Works with Power Interfaces (PHPM and GRX-TVI)	√			√			
Works with Power Interfaces (PHPM-SW)						√	
No wiring required		√					
Controls speed of a single ceiling fan							√

[1] In some low-wattage applications the PD-10NXD will require a neutral wire connection.

Job Name:	Model Numbers:
Job Number:	

369987g 4 06.28.19

Load Type and Capacity - Switches and Fan Control

Model Number	Description	Voltage	Load Type	Minimum Load	Maximum Load[3]		
					Not Ganged	End of Gang	Middle of Gang
PD-5WS-DV[1]	Two-wire switch	120 V~	Incandescent/Halogen	25 W	600 W	450 W	350 W
		277 V~	Incandescent/Halogen	25 W	1350 W	1100 W	800 W
		120 V~	MLV	25 W	600 VA/475 W	450 VA/350 W	350 VA/275 W
		277 V~	MLV	25 W	1350 VA/1075 W	1100 VA/875 W	800 VA/625 W
		120 V~	General Purpose Fan	0.4 A	3 A	3 A	3 A
		120/277 V~	LED	Use LUT-MLC[2]	5 A	4 A	3 A
		120/277 V~	Fluorescent	Use LUT-MLC[2]	5 A	4 A	3 A
		120 V~	ELV	Use LUT-MLC[2]	600 W	450 W	350 W
		277 V~	ELV	Use LUT-MLC[2]	1350 W	1100 W	800 W
PD-5ANS	Neutral-wire switch (neutral connection required)	120 V~	Incandescent/Halogen	10 W	600 W	600 W	600 W
			MLV	10 W	600 VA	600 VA	600 VA
			Fan	0.1 A	3 A	3 A	3 A
			LED	1 bulb	5 A	5 A	5 A
			Fluorescent	1 ballast	5 A	5 A	5 A
			ELV	10 W	600 W	600 W	600 W
			PHPM-SW	1 interface	2 interfaces	2 interfaces	2 interfaces
PD-6ANS	Neutral-wire switch (neutral connection required)	120 V~	Incandescent/Halogen	10 W	720 W	720 W	600 W
			MLV	10 W	720 VA	720 VA	600 VA
			Fan	0.1 A	3.6 A	3.6 A	3.6 A
			LED	1 bulb	6 A	6 A	5 A
			Fluorescent	1 ballast	6 A	6 A	5 A
			ELV	10 W	720 W	720 W	600 W
			PHPM-SW	1 interface	3 interfaces	3 interfaces	3 interfaces
PD-FSQN[4]	Fan speed control (neutral connection required)	120 V~	Single Ceiling Fan (Permanent split-capacitor motor)	0.1 A	1.5 A	1.5 A	1.5 A

1 No neutral wire required.

2 To ensure proper operation of the switch with LED, fluorescent, and ELV loads, a LUT-MLC (included) may be required, especially at lower wattages. If the status LED on the switch is flashing or solid red in color, a LUT-MLC must be installed. To guarantee best performance, installing a LUT-MLC with these load types regardless of wattage is recommended. Rarely, some load types may still flicker or glow in the off state even with the LUT-MLC installed, in which case a different load may be required or more than one LUT-MLC is required.

3 See “Ganging and Derating” section.

4 Not for use with fans that have integrated fan speed and/or light control modules, DC motor fans, fans with remote controls, bathroom or kitchen exhaust type fans.

Job Name:	Model Numbers:
Job Number:	

369987g 5 06.28.19

Load Type and Capacity - Dimmers

Model Number	Description	Voltage	Load Type	Minimum Load	Maximum Load		
					Not Ganged	End of Gang	Middle of Gang
PD-10NXD PD-10NXD-XX-C[8]	Wireless In-Wall Dimmer PRO (neutral connection required for certain load types)[4]	120 V~	Incandescent/Halogen	10 W with neutral (25 W without neutral)	1000 W	800 W	600 W
			MLV Halogen	10 W	1000 VA	800 VA	600 VA
			MLV LED	See Application Note #559			
			CFL/LED (120 V~ Rated)[3]	1 bulb[3]	250 W	250 W	250 W
			Hi-lume 1% 2-Wire LED drivers	1 driver	13 drivers	13 drivers	13 drivers
			Dimmable Ballasts[5]	1 ballast	1000 VA	800 VA	600 VA
			PHPM-PA/3F and GRX-TVI[4]	1 interface	3 interfaces	3 interfaces	3 interfaces
PD-3PCL[1, 9] PD-3PCL-WH-C[8] P-PKG1P-WH[9, 10] P-BDG-PKG2P[9, 11]	Wireless Plug-In Lamp Dimmer	120 V~	Incandescent/Halogen	10 W	300 W	N/A	N/A
			CFL/LED (120 V~ Rated)[3]	1 bulb[3]	100 W	N/A	N/A
PD-5NE PD-5NE-XX-C[8]	Phase Selectable Dimmer (neutral connection required)	120 V~	Incandescent/Halogen	10 W	500 W	400 W	300 W
			CFL/LED (120 V~ Rated)[3, 6, 7]	1 bulb[3]	250 W	250 W	250 W
			MLV Halogen[2, 6, 7]	10 W	400 VA	400 VA	400 VA
			ELV Halogen	10 W	500 W	400 W	300 W
			Hi-lume 1% 2-Wire LED drivers[6, 7]	1 driver	20 drivers	20 drivers	20 drivers
			Dimmable Ballasts[5, 6, 7]	1 ballast	400 VA	400 VA	400 VA
			PHPM-PA/3F and GRX-TVI[6, 7]	1 interface	3 interfaces	3 interfaces	3 interfaces
			ELV LED	See Application Note #559			
			MLV LED[6, 7]	See Application Note #559			
PD-6WCL PD-6WCL-XX-C[8] P-PKG1W-WH[9, 12] P-BDG-PKG2W[9, 13] P-BDG-PKG2W[9, 14] P-BDGPRO-PKG1W[9, 15]	Wireless In-Wall Dimmer	120 V~	Incandescent/Halogen	25 W	600 W	500 W	400 W
			CFL/LED (120 V~ Rated)[3]	1 bulb[3]	150 W	150 W	150 W

1 Cannot be ganged.

2 Need to change load type to MLV. See www.casetawireless.com/change_phase

3 See bulb list at www.lutron.com/led

4 For PD-10NXD, a neutral connection is required for MLV loads, LED drivers, dimmable ballasts, and power modules (PHPM-PA, PHPM-3F, and GRX-TVI).

5 Compatible dimmable ballasts include Tu-Wire, Mark 10®, and PowerSense®.

6 These loads are best operated using a forward-phase control. Consult https://www.casetawireless.com/support to ensure the appropriate phase for bulb models used.

7 SSL7 compliant when in forward-phase.

8 Canadian packaged product.

9 Available in WH only.

10 Kit model number. Kit includes (1) PD-3PCL-WH, and (1) PJ2-3BRL-WH-L01R (3-button with raise/lower Pico wireless control in White).

11 Kit model number. Kit includes (1) L-BDG2-WH (Caséta Wireless Smart Bridge with HomeKit technology), (1) PD-3PCL-WH, (1) PJ2-3BRL-WH-L01R (3-button with raise/lower Pico wireless control in White) and (1) L-PED1-WH (Single tabletop pedestal in White).

12 Kit model number. Kit includes (1) PD-6WCL-WH, (1) PJ2-3BRL-WH-L01R (3-button with raise/lower Pico wireless control in White), and (1) CW-1-WH (single-gang faceplate in White).

13 Kit model number. Kit includes (1) L-BDG2-WH (Caséta Wireless Smart Bridge with HomeKit technology), (1) PD-6WCL-WH, (1) PJ2-3BRL-WH-L01R (3-button with raise/lower Pico wireless control in White), and (1) CW-1-WH (single-gang faceplate in White).

14 Kit model number. Kit includes (1) L-BDG2-WH (Caséta Wireless Smart Bridge with HomeKit technology), (2) PD-6WCL-WH, (2) PJ2-3BRL-WH-L01R (3-button with raise/lower Pico wireless control in White), (2) L-PED1-WH (Single tabletop pedestal in White) and (2) CW-1-WH (single-gang faceplate in White).

15 PRO Kit model number. Kit includes (1) L-BDGPRO2-WH (Caséta Wireless Smart Bridge PRO with HomeKit technology), (1) PD-6WCL-WH, (1) PJ2-3BRL-WH-L01R (3-button with raise/lower Pico wireless control in White) and (1) CW-1-WH (single-gang faceplate in White).

Job Name:	Model Numbers:
Job Number:	

Ganging and Derating

When ganging with other switches/dimmers in the same wallbox, derating is required. See “Load Type and Capacity” charts.

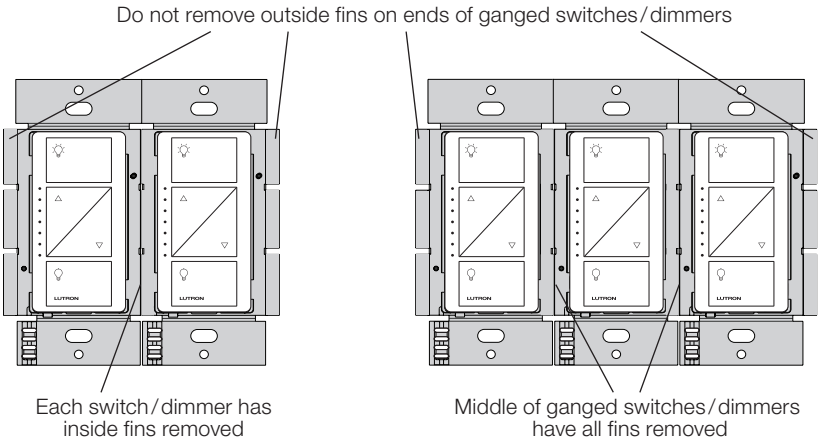

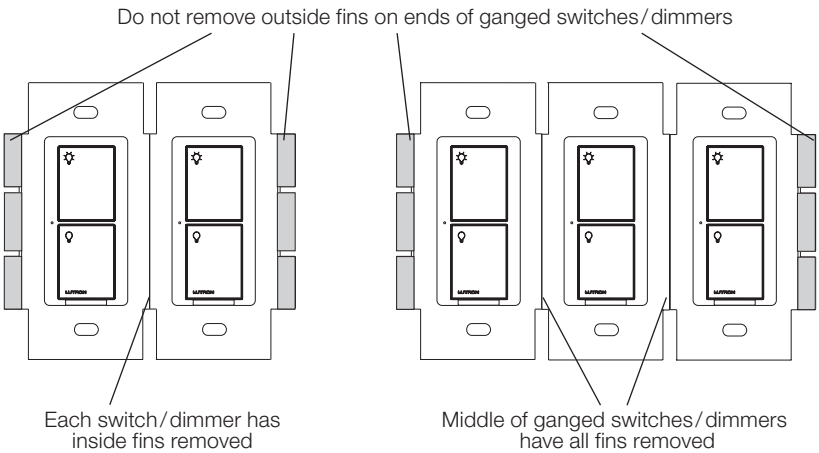

Job Name:	Model Numbers:
Job Number:	

Operation

In-Wall Switches

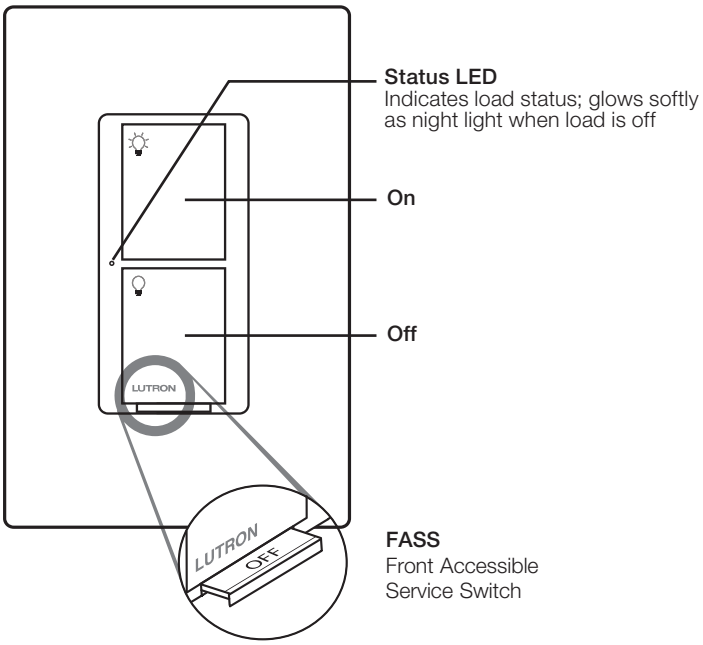

ELV+ Dimmer and In-Wall Dimmers

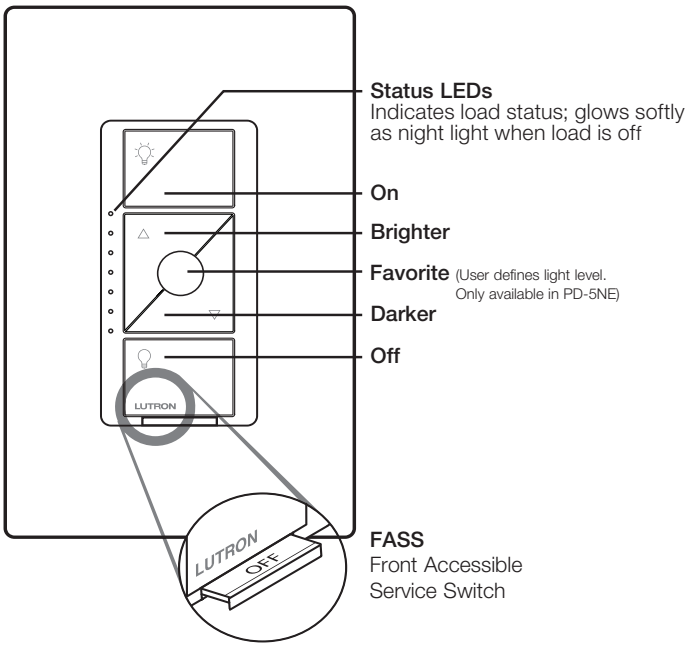

FASS — Front Accessible Service Switch

Important Notice: To service load, remove power by pulling out the FASS as far as possible. To restore power after servicing load, push the FASS back in completely.

Plug-In Dimmer

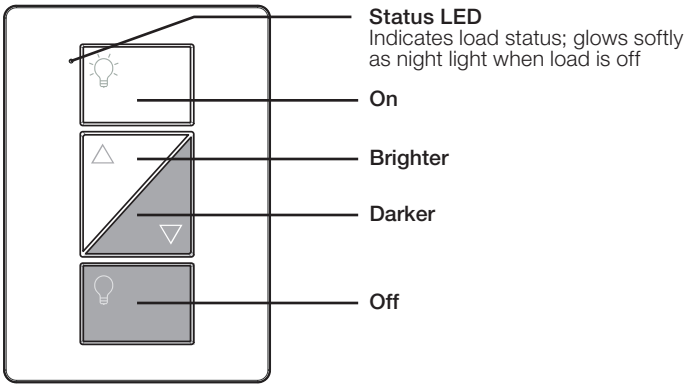

Fan Control

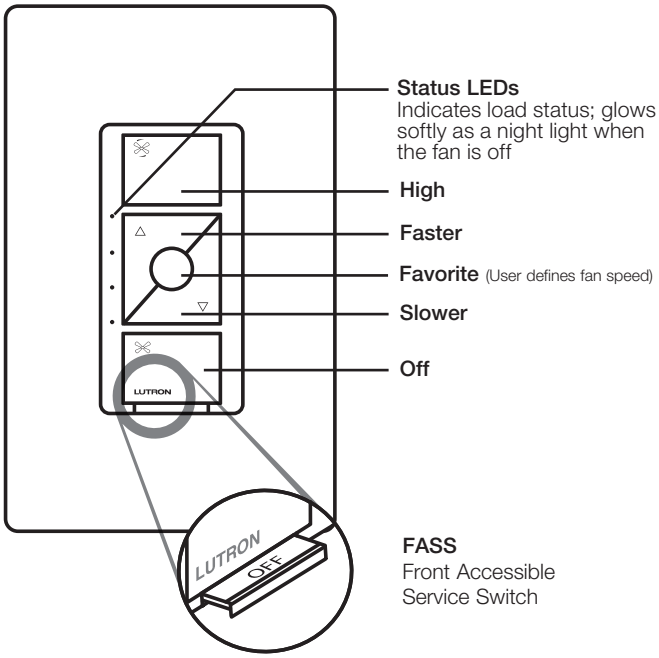

Job Name:	Model Numbers:
Job Number:	

369987g 8 06.28.19

Mounting

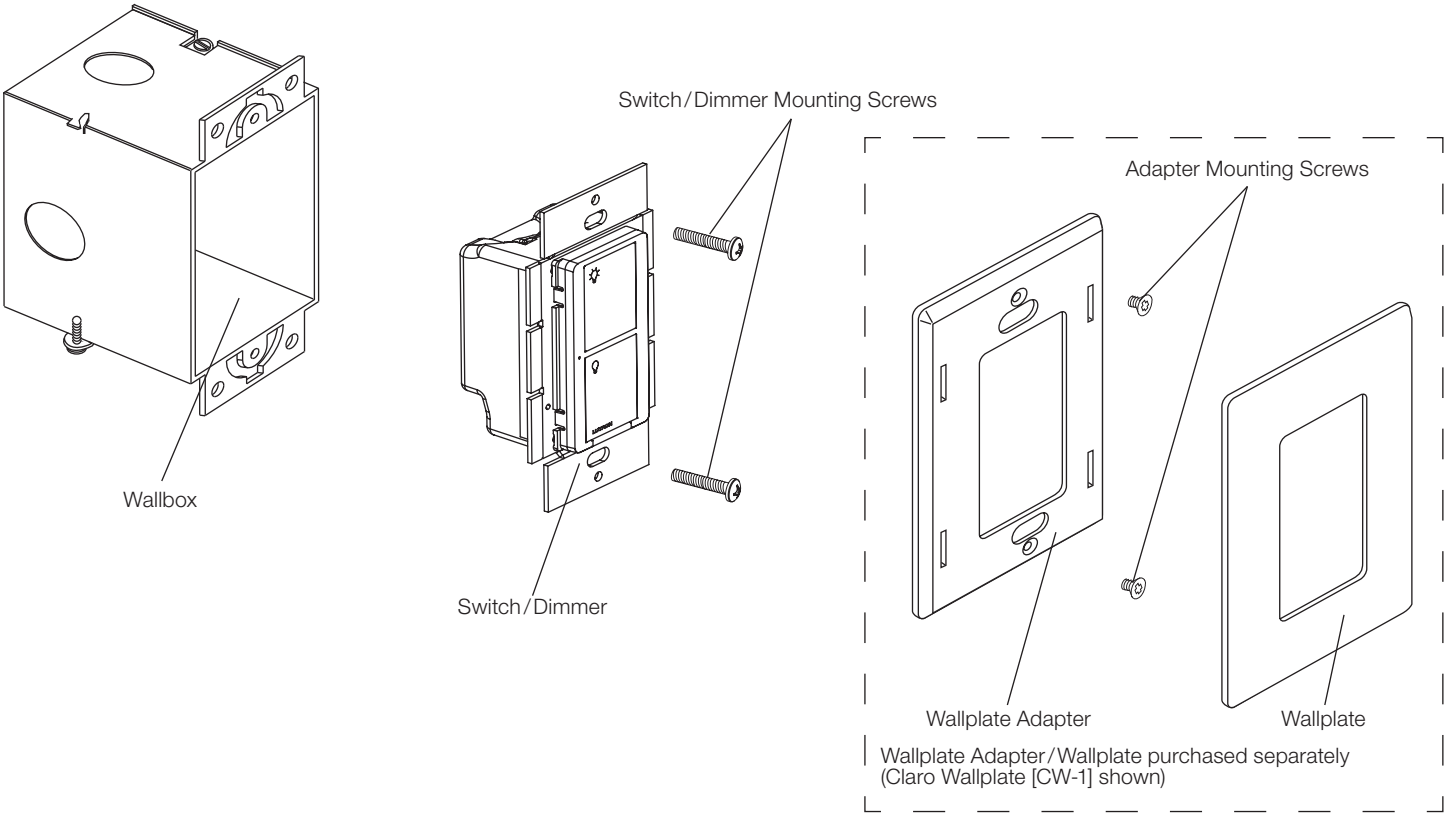

Job Name:	Model Numbers:
Job Number:	

Dimensions

In-Wall Switches and Dimmers

Front View

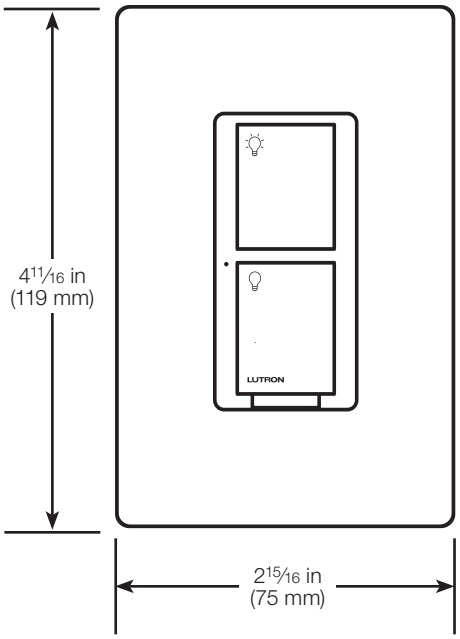

Side View

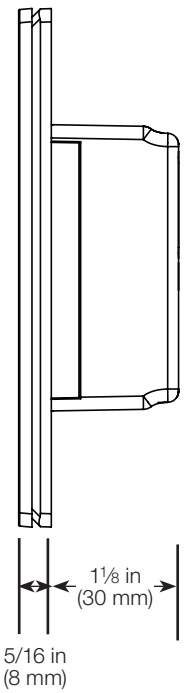

Fan Control

Front View

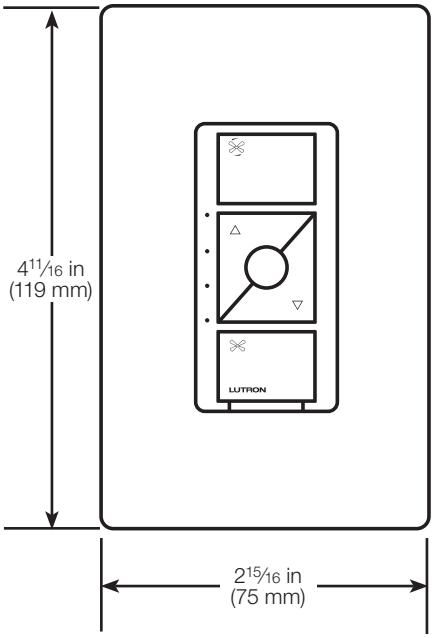

Side View

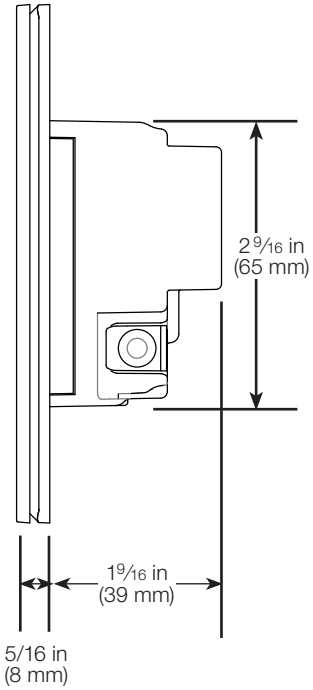

Plug-In Dimmer

Front View

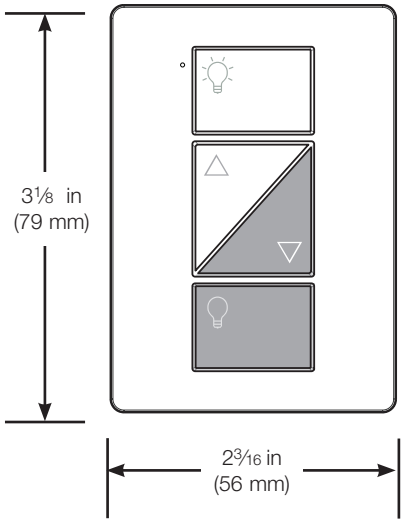

Side View

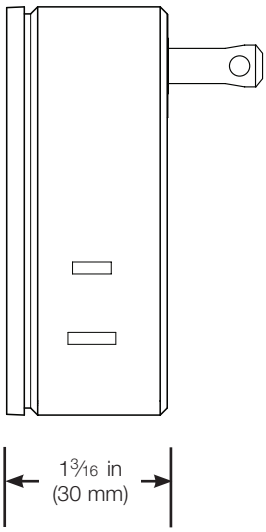

Job Name:	Model Numbers:
Job Number:	

Wiring Diagrams - Switches

Single Location Installation

PD-5WS-DV

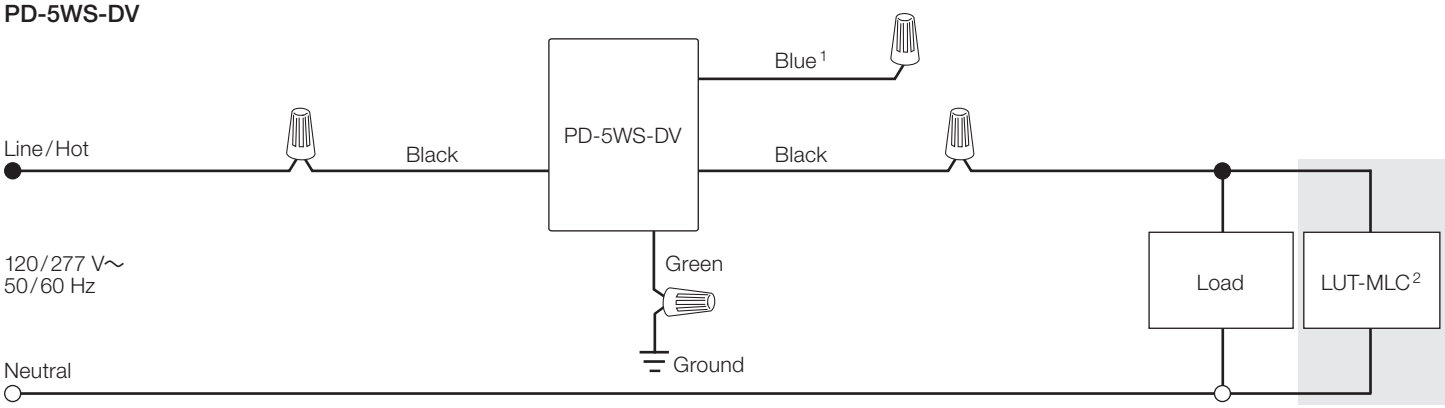

PD-5ANS, PD-6ANS

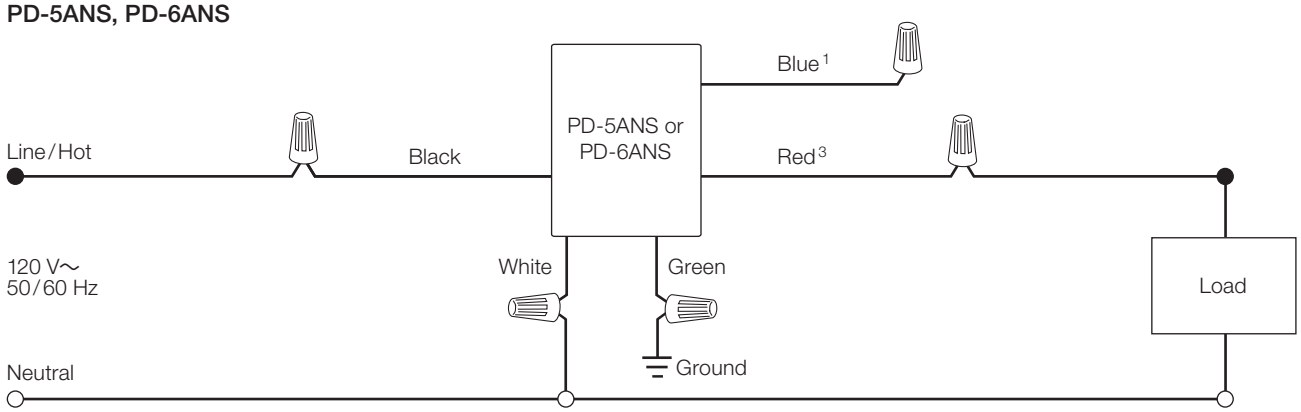

1 When using controls without a mechanical 3-way switch, cap the blue terminal. **Do not** connect the blue wire to any other wiring or to ground.

2 A LUT-MLC ensures proper function when LED, fluorescent, or ELV loads are used. Install the LUT-MLC inside a load fixture or in a separate junction box within the circuit.

3 The red wire must be connected to the load and the black wire must be connected to Line/Hot. The switch will not work if the wires are reversed.

(continued on next page…)

Job Name:	Model Numbers:
Job Number:	

Wiring Diagrams - Switches (cont.)

3-Way Installation (with mechanical switch)

Option 1

PD-5WS-DV (Load-side)

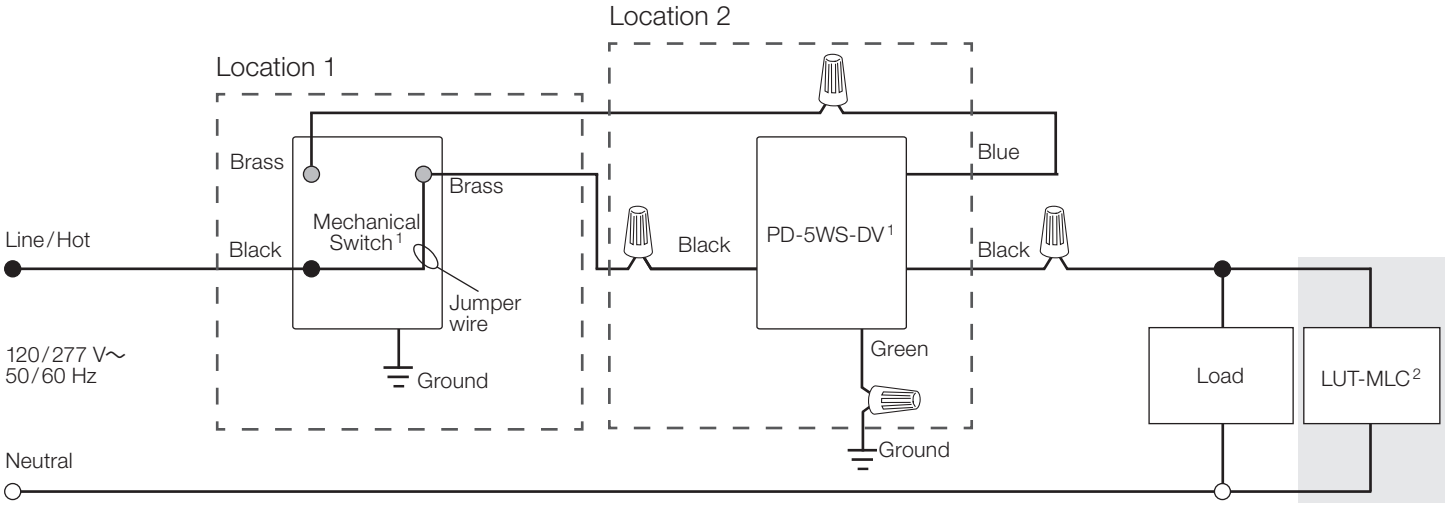

PD-5WS-DV (Line-side)

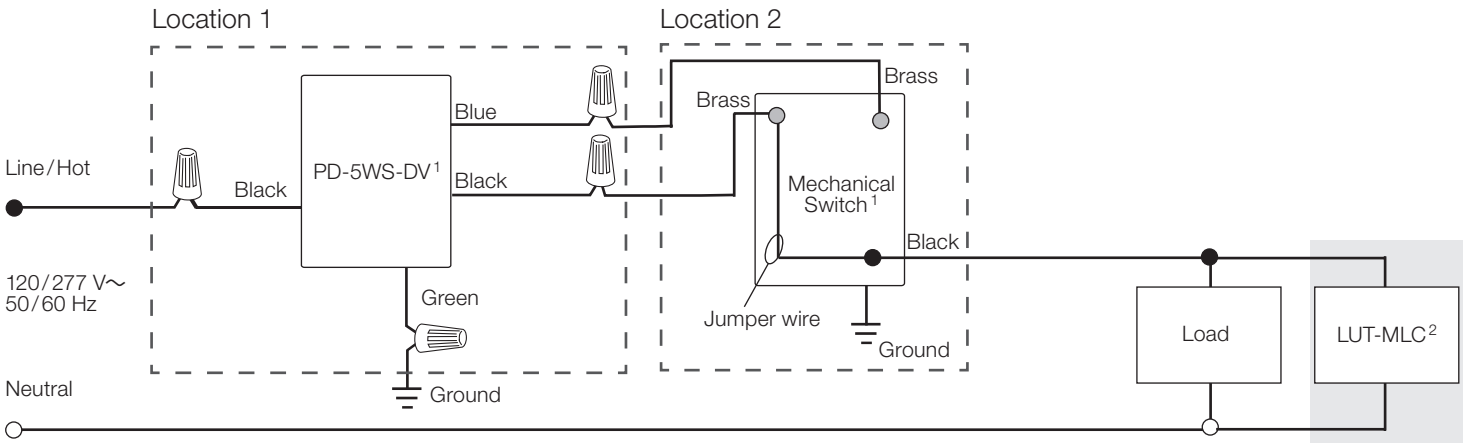

1 Location of Caséta Wireless in-wall switch and mechanical switch may be reversed.

2 A LUT-MLC ensures proper function when LED, fluorescent, or ELV loads are used. Install the LUT-MLC inside a load fixture or in a separate junction box within the circuit.

(continued on next page…)

Job Name:	Model Numbers:
Job Number:	

Wiring Diagrams - Switches (cont.)

3-Way Installation (with mechanical switch)

Option 1 (cont.)

PD-5ANS, PD-6ANS (Load-side)

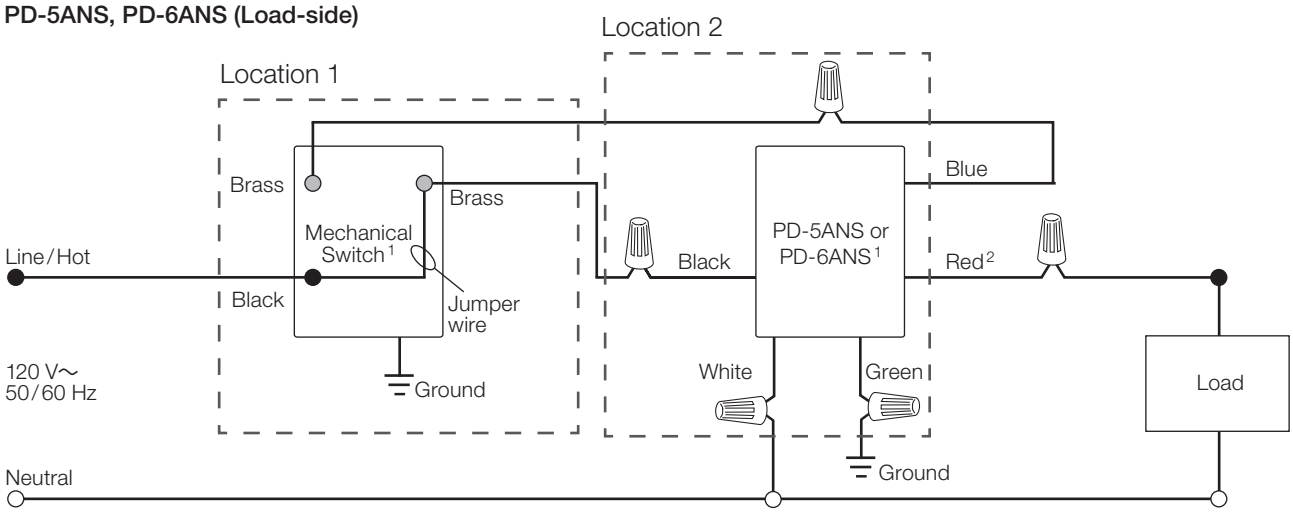

PD-5ANS, PD-6ANS (Line-side)

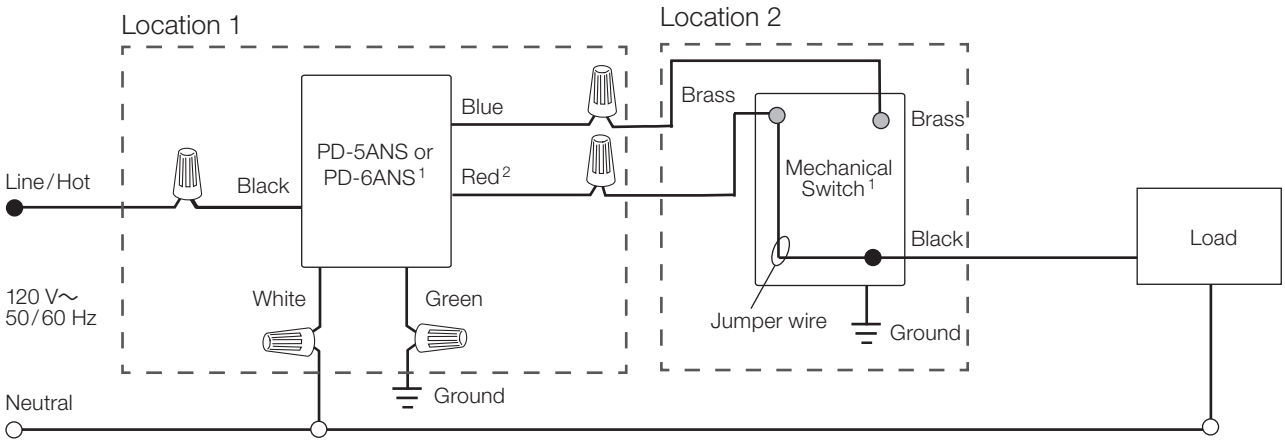

1 Location of Caséta Wireless in-wall switch and mechanical switch may be reversed.

2 The red wire must be connected to the load and the black wire must be connected to Line/Hot. The switch will not work if the wires are reversed.

Job Name:	Model Numbers:
Job Number:	

Wiring Diagrams - Switches (cont.)

3-Way Installation (with Pico remote controls)

Option 2: PJ2-2B-xx and wallbox mounting adapters (PICO-WBX-ADAPT)

PD-5WS-DV

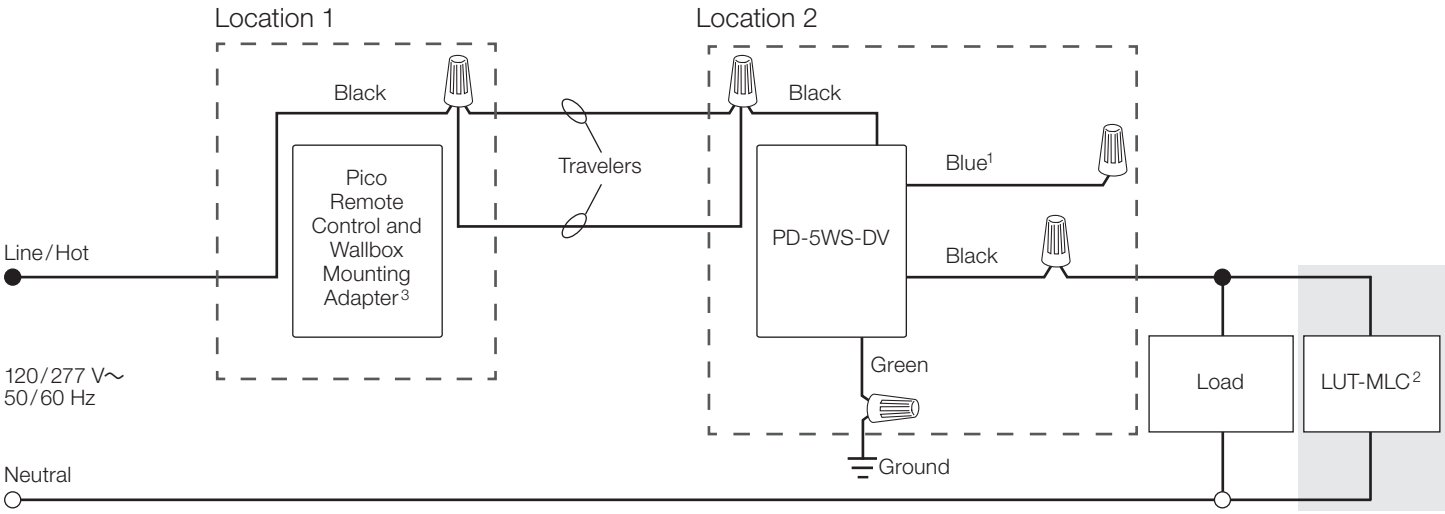

PD-5ANS, PD-6ANS

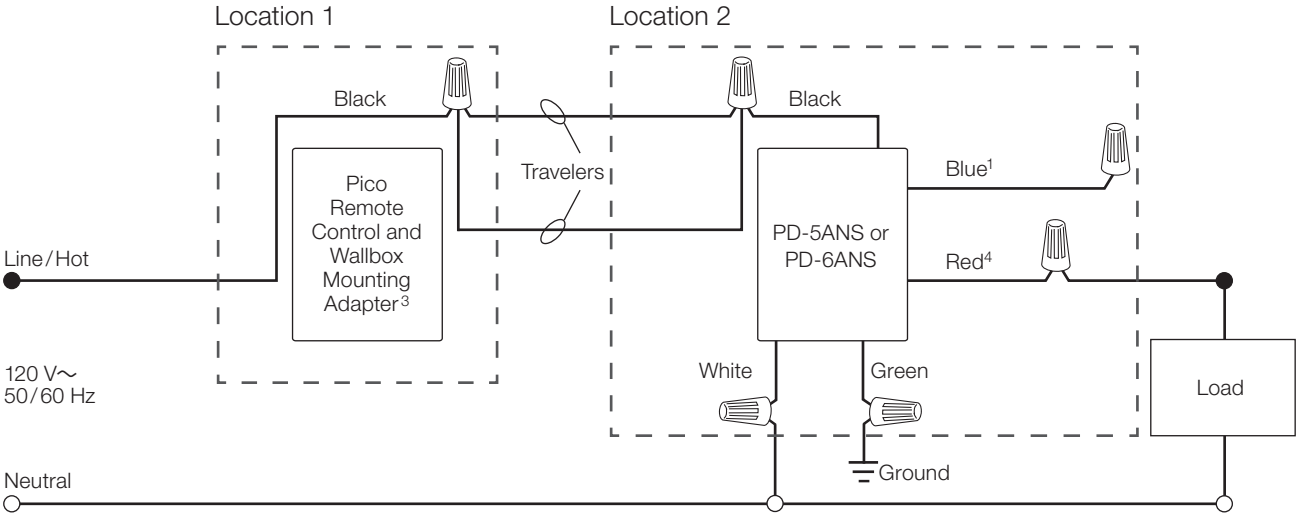

1 When using controls without mechanical 3-way switch, cap the blue terminal. **Do not** connect the blue wire to any other wiring or to ground.
2 A LUT-MLC ensures proper function when LED, fluorescent, or ELV loads are used. Install the LUT-MLC inside a load fixture or in a separate junction box within the circuit.
3 The mechanical switch will need to be removed so the Pico remote control can be installed.
4 The red wire must be connected to the load and the black wire must be connected to Line/Hot. The switch will not work if the wires are reversed.

(continued on next page…)

Job Name:	Model Numbers:
Job Number:	

Wiring Diagrams - Switches (cont.)

Multi-location Installation (3 or more switches control the load)

With Pico remote controls (PJ2-2B-xx) and wallbox mounting adapters (PICO-WBX-ADAPT)

PD-5WS-DV

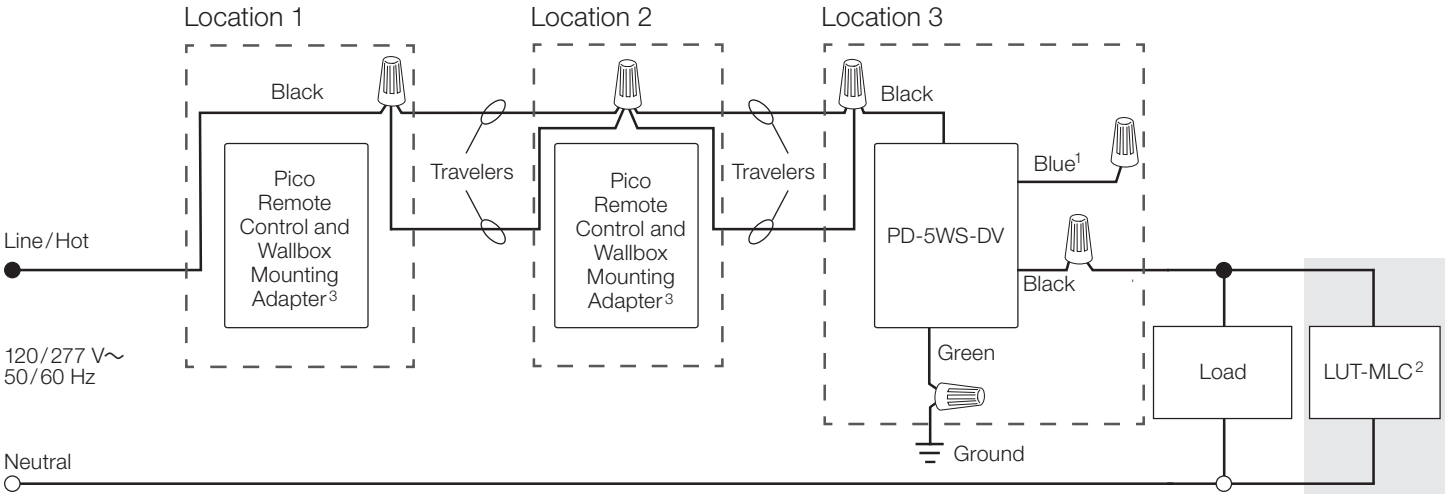

PD-5ANS, PD-6ANS

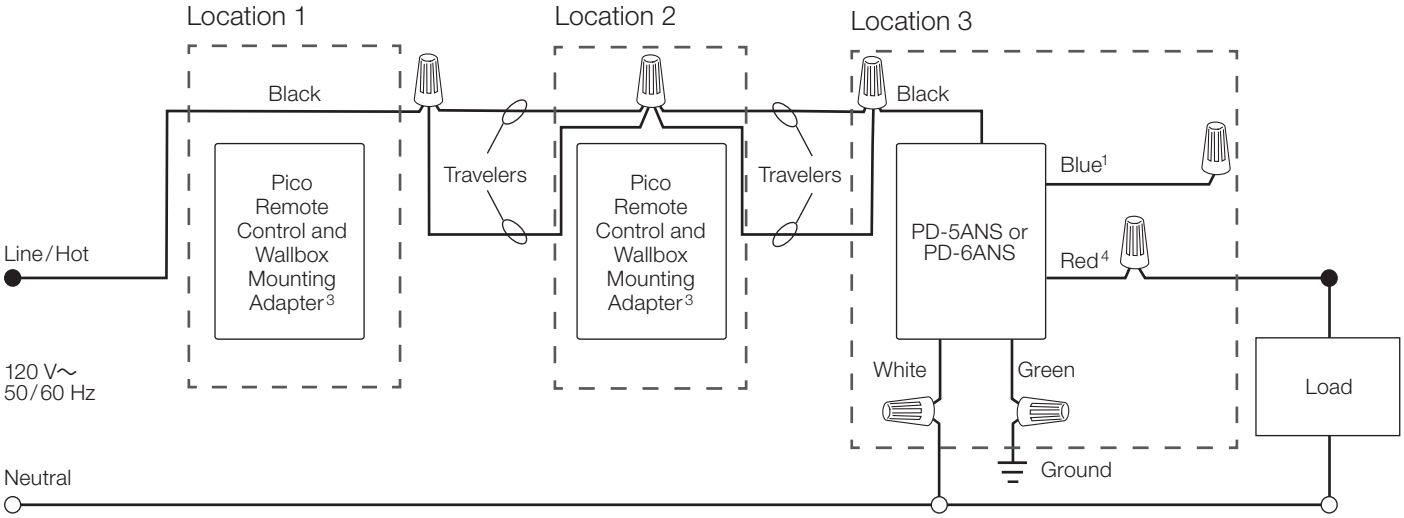

1 When using controls without mechanical 3-way switch, cap the blue terminal. **Do not** connect the blue wire to any other wiring or to ground.

2 A LUT-MLC ensures proper function when LED, fluorescent, or ELV loads are used. Install the LUT-MLC inside a load fixture or in a separate junction box within the circuit.

3 The mechanical switch will need to be removed so the Pico remote control can be installed.

4 The red wire must be connected to the load and the black wire must be connected to Line/Hot. The switch will not work if the wires are reversed.

Job Name:	Model Numbers:
Job Number:	

Wiring Diagrams - Dimmers

Single Location Installation

PD-10NXD or PD-5NE

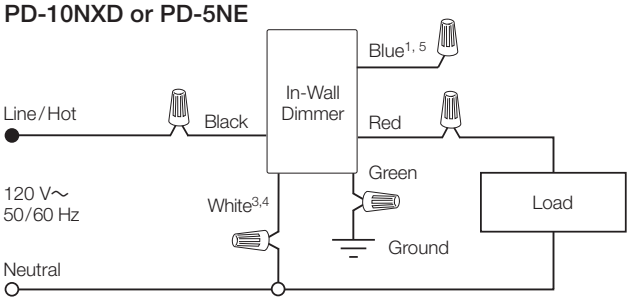

PD-6WCL

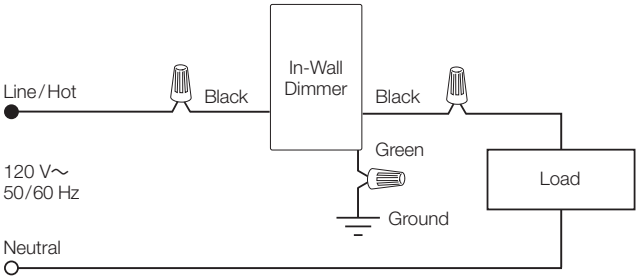

[1] When using controls without mechanical 3-way switch, cap the blue terminal. **Do not** connect the blue wire to any other wiring or to ground.
[2] Location of Caséta Wireless in-wall dimmer PRO and mechanical switch may be reversed.
[3] For PD-10NXD only, neutral connection optional except for MLV loads, LED drivers, and power modules (PHPM-PA, PHPM-3F, and GRX-TVI).
[4] For PD-5NE, neutral is required.
[5] Blue wire is only present on the PD-10NXD model.

Job Name:	Model Numbers:
Job Number:	

369987g 16 06.28.19

Wiring Diagrams - Dimmers (cont.)

Multi-Location Installation

With Pico remote controls (PJ2-XX-XX) and wallbox mounting adapters (PICO-WBX-ADAPT)

PD-10NXD and PD-5NE

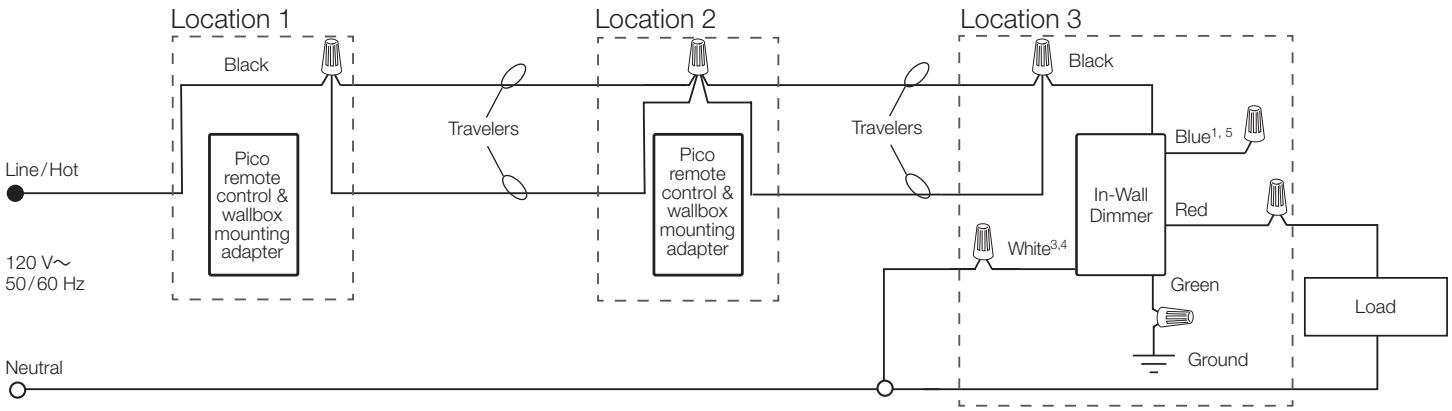

PD-6WCL

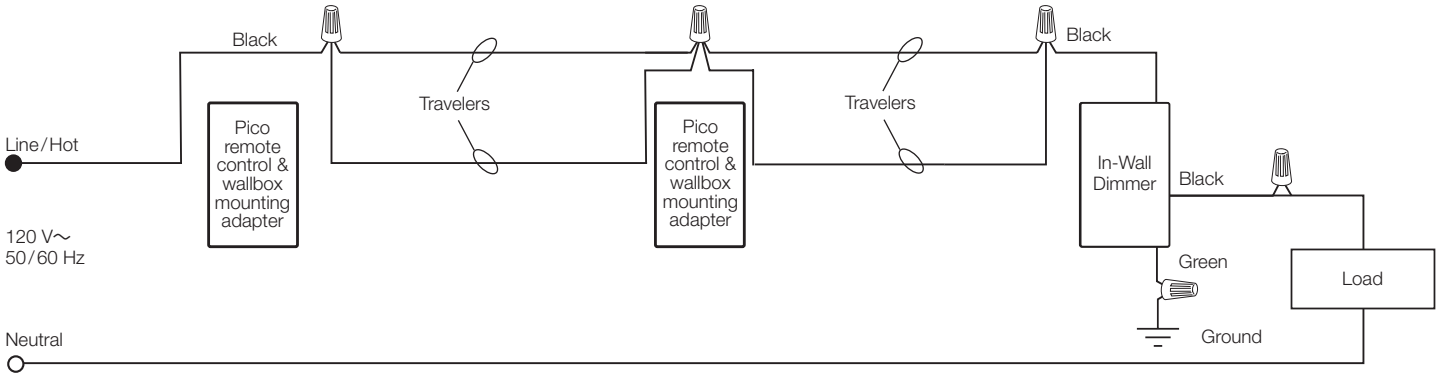

1 When using controls without mechanical 3-way switch, cap the blue terminal. **Do not** connect the blue wire to any other wiring or to ground.
2 Location of Caséta Wireless in-wall dimmer PRO and mechanical switch may be reversed.
3 For PD-10NXD only, neutral connection optional except for MLV loads, LED drivers, and power modules (PHPM-PA, PHPM-3F, and GRX-TVI).
4 For PD-5NE, neutral is required.
5 Blue wire is only present on the PD-10NXD model.

Job Name:	Model Numbers:
Job Number:	

Wiring Diagrams - Dimmers (cont.)

3-Way Installation

With mechanical switch

PD-10NXD

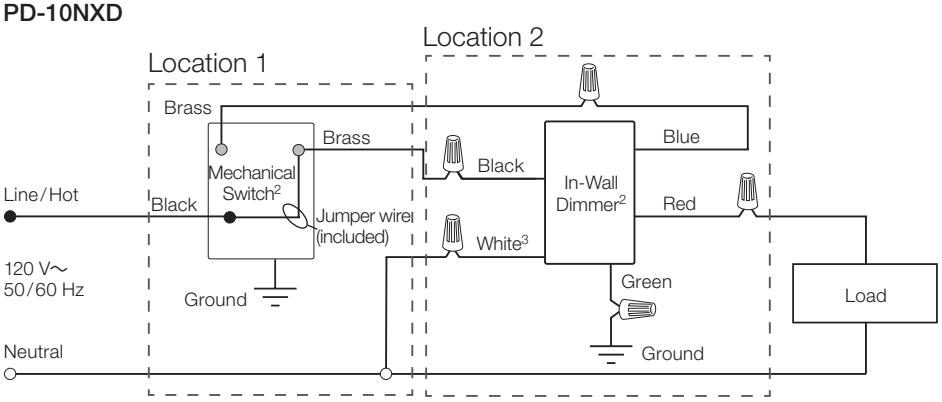

Installation with PHPM - Neutral required[4]

PD-10NXD and PD-5NE

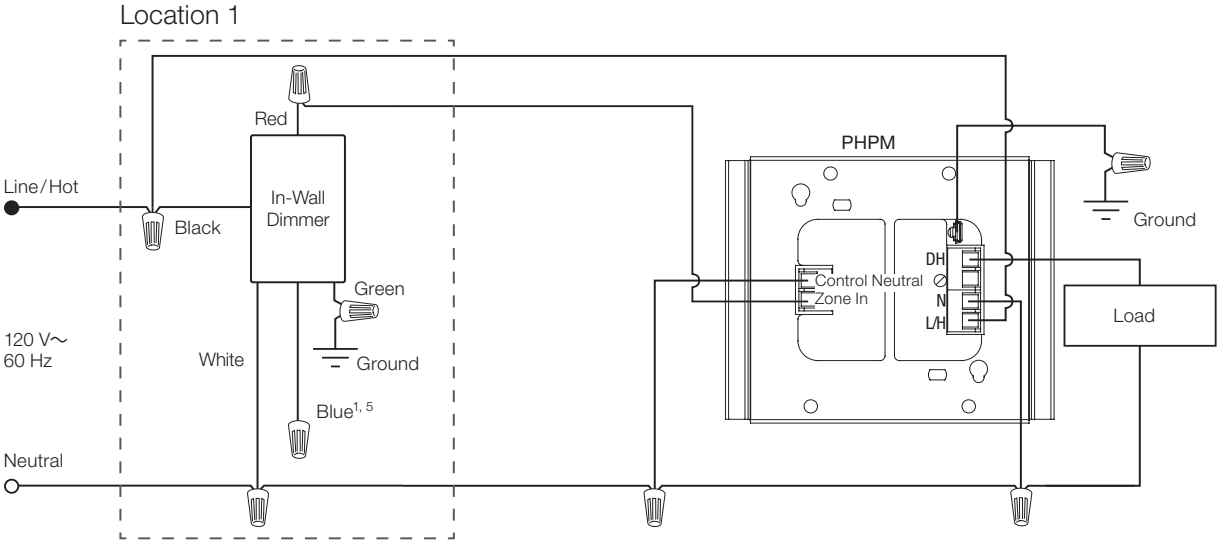

[1] When using controls without mechanical 3-way switch, cap the blue terminal. **Do not** connect the blue wire to any other wiring or to ground.
[2] Location of in-wall dimmer and mechanical switch may be reversed.
[3] Neutral connection optional except for MLV loads, LED drivers, and power modules (PHPM-PA, PHPM-3F, and GRX-TVI).
[4] See Lutron P/Ns 369356 and 369355 for additional wiring diagrams.
[5] Blue wire is only present on the PD-10NXD model.

Job Name:	Model Numbers:
Job Number:	

Wiring Diagrams - Dimmers (cont.)

Installation with GRX-TVI - Neutral required[1]

PD-10NXD and PD-5NE

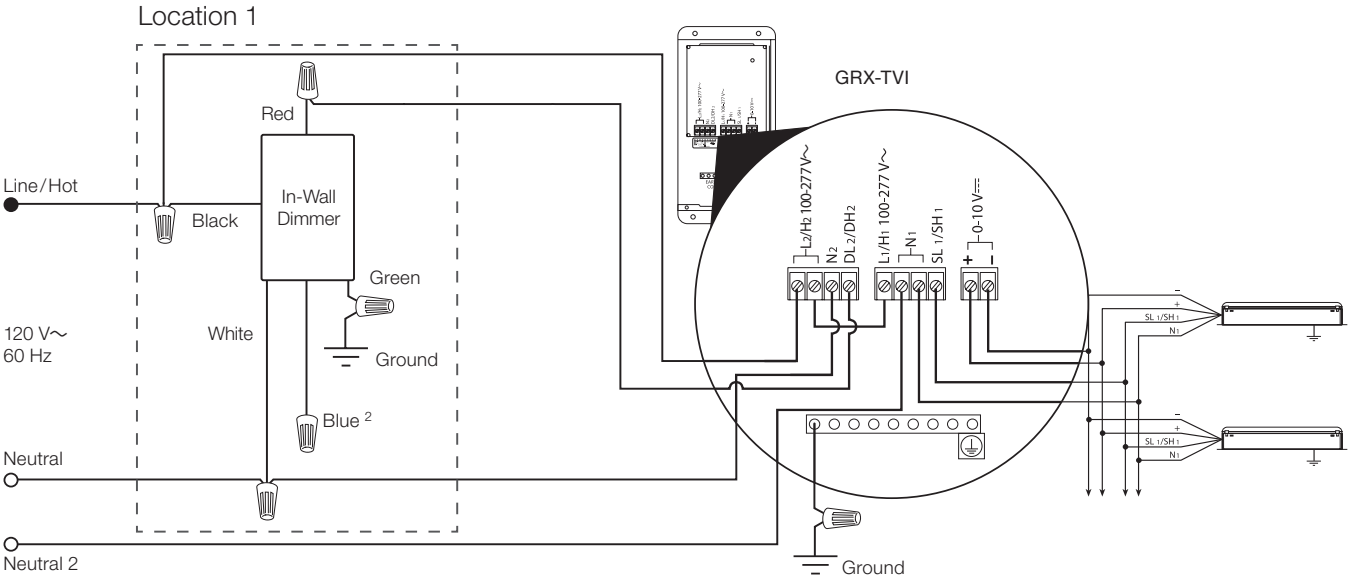

Installation with Hi-lume 1% 2-wire LED Drivers - Neutral required

PD-10NXD and PD-5NE

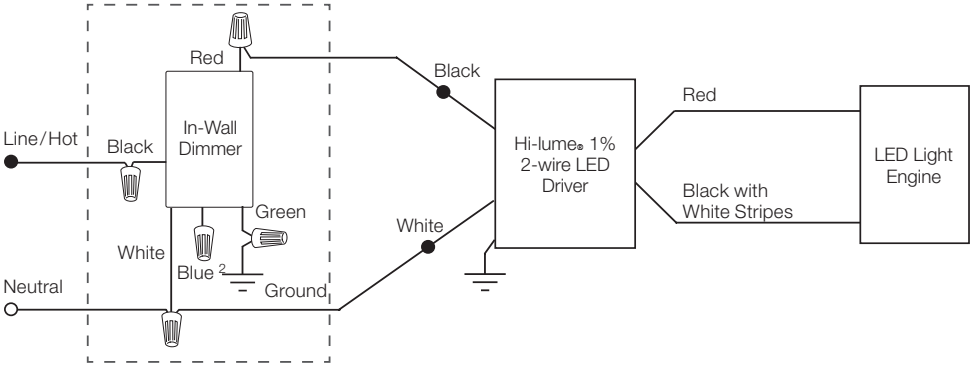

Note: For more information on Hi-lume 1% 2-wire LED drivers, see www.lutron.com

[1] See Lutron P/N 369247 for additional wiring diagrams.
[2] Blue wire is only present on the PD-10NXD model.

Job Name:	Model Numbers:
Job Number:	

369987g 19 06.28.19

Wiring Diagrams - Fan Controls

Single Location Installation

PD-FSQN

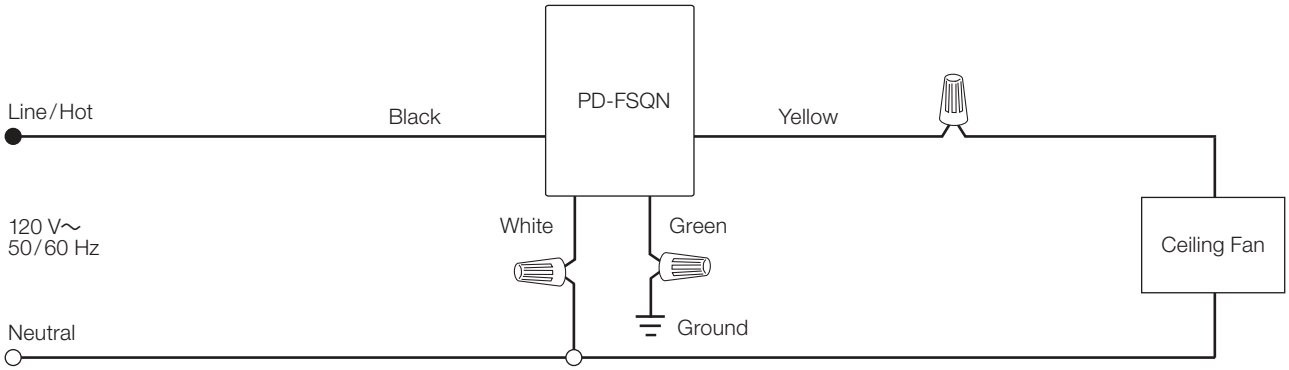

3-Way Installation (with Pico remote controls)

PJ2-3BRL-xxx-F01 and wallbox mounting adapters (PICO-WBX-ADAPT)

PD-FSQN

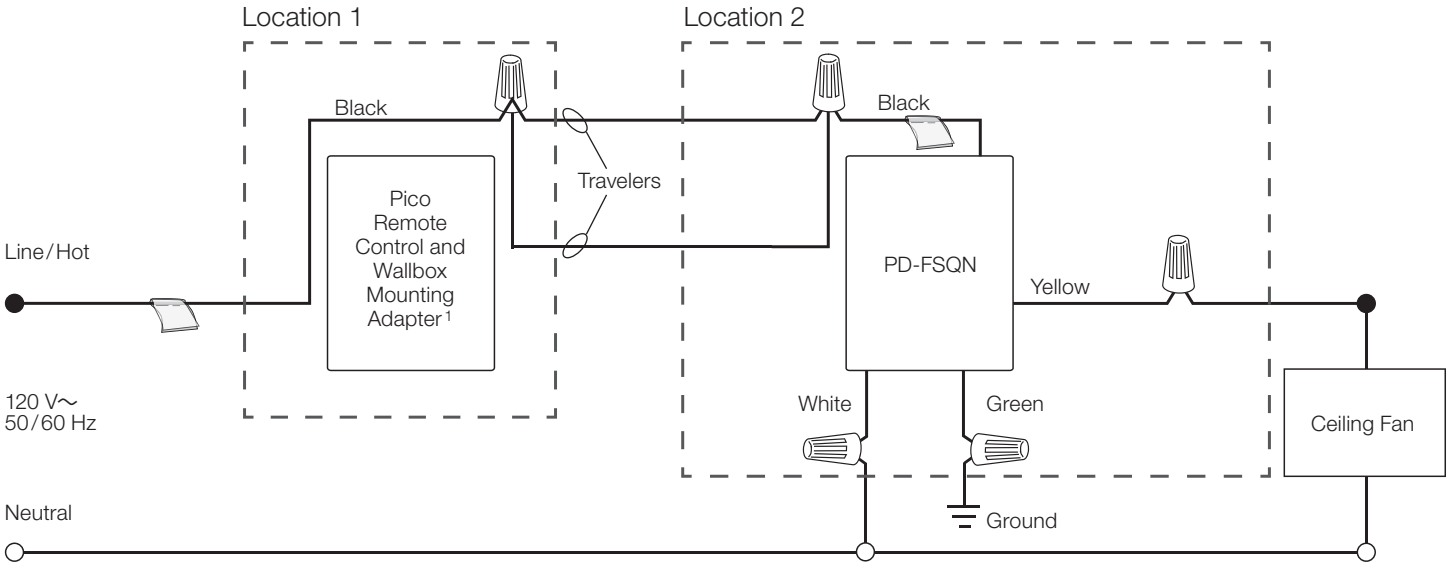

[1] The mechanical switch will need to be removed so the Pico remote control can be installed.

Job Name:	Model Numbers:
Job Number:	

Colors and Finishes

Gloss Finishes

White
WH

Black
BL

Ivory
IV

Light Almond
LA

Due to printing limitations, colors and finishes shown cannot be guaranteed to perfectly match actual product colors.

Lutron, Lutron, Caséta, Pico, Clear Connect, Claro, Hi-lume, FASS, Radio Powr Savr, and Tu-Wire are trademarks or registered trademarks of Lutron Electronics Co., Inc. in the US and/or other countries.

iOS is a registered trademark of Cisco in the U.S. and other countries and is used under license.

All product names, logos, and brands are property of their respective owners.

Job Name:	Model Numbers:
Job Number:	