SIEMENS

Data sheet 3SU1150-1HA20-3PH0

Siemens EcoTech

EMERGENCY STOP mushroom-type actuator, 22 mm, round, metal, shiny, red, 40 mm, positive latching, according to EN ISO 13850, pull-to-unlatch mechanism, with yellow backing plate, inscription: NOT-HALT, with holder, 1 NC, 1 NC, spring-type terminal

product brand name	SIRIUS ACT
product designation	EMERGENCY STOP mushroom pushbuttons
design of the product	Complete unit
product type designation	3SU1
product line	Metal, shiny, 22 mm
manufacturer's article number	
● of supplied contact module at position 1	3SU1400-1AA10-3CA0
● of supplied contact module at position 2	3SU1400-1AA10-3CA0
● of the supplied holder	3SU1550-0AA10-0AA0
● of the supplied actuator	3SU1050-1HA20-0AA0
● of supplied accessory	3SU1900-0BC31-0AT0
Enclosure	
number of command points	1
Actuator	
design of the actuating element	positive latching
principle of operation of the actuating element	latching
product extension optional light source	No
color of the actuating element	red
material of the actuating element	plastic
shape of the actuating element	round
outer diameter of the actuating element	40 mm
number of contact modules	2
type of unlocking device	pull-to-unlatch mechanism
Front ring	
product component front ring	No
Holder	
material of the holder	Plastic
Display	
number of LED modules	0
General technical data	
product function	
● positive opening	Yes
● EMERGENCY OFF function	Yes
● EMERGENCY STOP function	Yes
product component light source	No
insulation voltage rated value	500 V
degree of pollution	3

Subject to change without notice
© Copyright Siemens

type of voltage of the operating voltage	AC/DC
surge voltage resistance rated value	6 kV
protection class IP	IP66, IP67, IP69(IP69K)
● of the terminal	IP20
degree of protection NEMA rating	1, 2, 3, 3R, 4, 4X, 12, 13
shock resistance	
● **according to IEC 60068-2-27**	sinusoidal half-wave 15g / 11 ms
vibration resistance	
● **according to IEC 60068-2-6**	10 ... 500 Hz: 5g
operating frequency maximum	600 1/h
mechanical service life (operating cycles) typical	300 000
electrical endurance (operating cycles) typical	300 000
thermal current	10 A
reference code according to IEC 81346-2	S
continuous current of the C characteristic MCB	10 A; for a short-circuit current smaller than 400 A
continuous current of the quick DIAZED fuse link	10 A
continuous current of the DIAZED fuse link gG	10 A
Substance Prohibitance (Date)	10/01/2014
operating voltage	
● at AC	
— at 50 Hz rated value	5 ... 500 V
— at 60 Hz rated value	5 ... 500 V
● at DC rated value	5 ... 500 V
Power Electronics	
contact reliability	One maloperation per 100 million (17 V, 5 mA), one maloperation per 10 million (5 V, 1 mA)
Auxiliary circuit	
design of the contact of auxiliary contacts	Silver alloy
number of NC contacts for auxiliary contacts	2
number of NO contacts for auxiliary contacts	0
Connections/ Terminals	
type of electrical connection	
● of modules and accessories	Spring-type terminal
type of connectable conductor cross-sections	
● solid without core end processing	2x (0.25 ... 1.5 mm²)
● finely stranded with core end processing	2x (0.25 ... 0.75 mm²)
● finely stranded without core end processing	2x (0.25 ... 1.5 mm²)
● for AWG cables	2x (24 ... 16)
tightening torque of the screws in the bracket	1 ... 1.2 N·m
Safety related data	
proportion of dangerous failures	
● with low demand rate according to SN 31920	20 %
● with high demand rate according to SN 31920	20 %
B10 value with high demand rate according to SN 31920	100 000
failure rate [FIT] with low demand rate according to SN 31920	100 FIT
Ambient conditions	
ambient temperature	
● during operation	-25 ... +70 °C
● during storage	-40 ... +80 °C
environmental category during operation according to IEC 60721	3M6, 3S2, 3B2, 3C3, 3K6 (with relative air humidity of 10 ... 95%, no condensation in operation permitted for all devices behind front panel)
Environmental footprint	
Environmental Product Declaration(EPD)	Yes
Global Warming Potential [CO2 eq] total	0.593 kg
Global Warming Potential [CO2 eq] during manufacturing	0.625 kg
Global Warming Potential [CO2 eq] during operation	0.235 kg
Global Warming Potential [CO2 eq] after end of life	-0.267 kg
Siemens Eco Profile (SEP)	Siemens EcoTech
Installation/ mounting/ dimensions	
fastening method	front plate mounting

Subject to change without notice
© Copyright Siemens

● of modules and accessories	Front plate mounting
height	40 mm
width	30 mm
shape of the installation opening	round
mounting diameter	22.3 mm
positive tolerance of installation diameter	0.4 mm
mounting height	46.4 mm
installation width	75 mm
installation depth	48.6 mm

Accessories

number of backing plates	1
marking of backing plate	NOT-HALT
color of backing plate	Yellow

Approvals Certificates

General Product Approval

CSA Confirmation UKCA CCC EG-Konf. UL

General Product Approval	Test Certificates		Marine / Shipping		
EAC	Type Test Certificates/Test Report	Special Test Certificate	ABS	LRS	PRS

Marine / Shipping	other	Environment		
RINA	Confirmation	EPD	Siemens EcoTech	Environmental Confirmations

Further information

Information on the packaging
https://support.industry.siemens.com/cs/ww/en/view/109813875
Information- and Downloadcenter (Catalogs, Brochures,…)
https://www.siemens.com/ic10
Industry Mall (Online ordering system)
https://mall.industry.siemens.com/mall/en/en/Catalog/product?mlfb=3SU1150-1HA20-3PH0
Cax online generator
http://support.automation.siemens.com/WW/CAXorder/default.aspx?lang=en&mlfb=3SU1150-1HA20-3PH0
Service&Support (Manuals, Certificates, Characteristics, FAQs,...)
https://support.industry.siemens.com/cs/ww/en/ps/3SU1150-1HA20-3PH0
Image database (product images, 2D dimension drawings, 3D models, device circuit diagrams, EPLAN macros, ...)
http://www.automation.siemens.com/bilddb/cax_de.aspx?mlfb=3SU1150-1HA20-3PH0&lang=en

Subject to change without notice
© Copyright Siemens

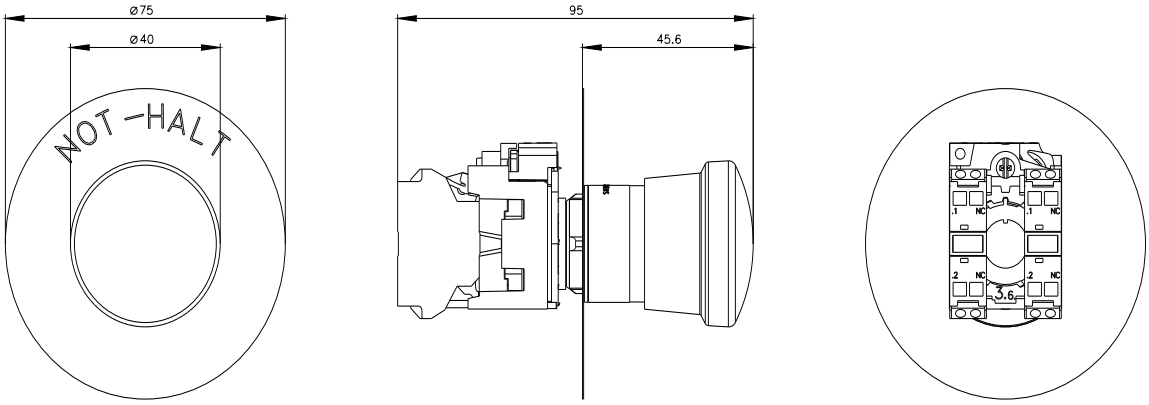

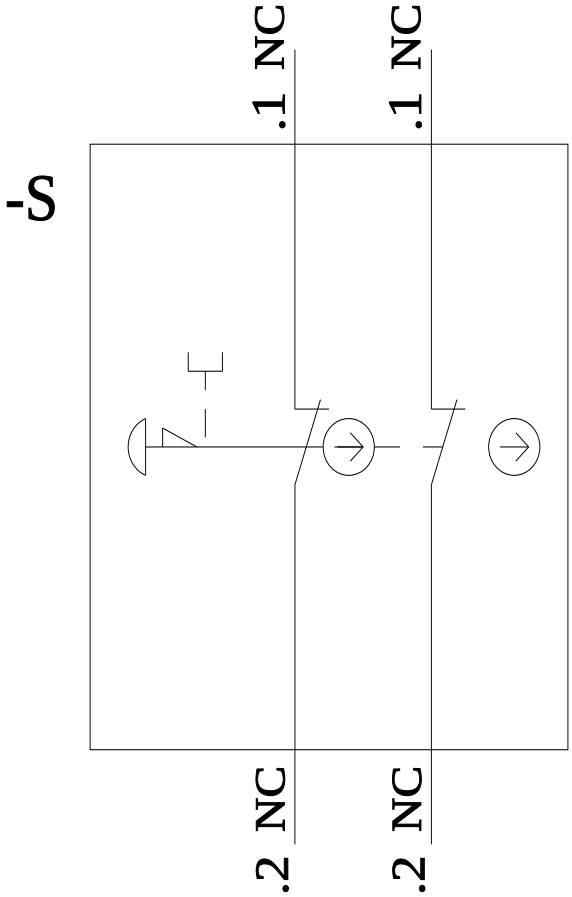

last modified: 3/4/2024

Subject to change without notice
© Copyright Siemens

Subject to change without notice
© Copyright Siemens