SIEMENS

Data sheet 3RA2323-8XB30-1BB4

reversing contactor assembly, AC-3e/AC-3, 9 A, 4 kW / 400 V, 3-pole, 24 V DC, screw terminal, electrical and mechanical interlock, auxiliary contacts: 2 x 1 NO

product brand name	SIRIUS
product designation	Reversing contactor assembly
product type designation	3RA23
manufacturer's article number	
● 1 of the supplied contactor	3RT2023-1AK60
● 2 of the supplied contactor	3RT2023-1AK60
● of the supplied RH assembly kit	3RA2923-2AA1
General technical data	
size of contactor	S0
product extension auxiliary switch	Yes
shock resistance at rectangular impulse	
● at AC	7,5g / 5 ms, 4,7g / 10 ms
● at DC	10g / 5 ms, 7,5g / 10 ms
shock resistance with sine pulse	
● at AC	11,8g / 5 ms, 7,4g / 10 ms
● at DC	15g / 5 ms, 10g / 10 ms
mechanical service life (operating cycles)	
● of contactor typical	10 000 000
● of the contactor with added auxiliary switch block typical	10 000 000
reference code according to IEC 81346-2	Q
Substance Prohibitance (Date)	10/01/2009
Ambient conditions	
installation altitude at height above sea level maximum	2 000 m
ambient temperature	
● during operation	-25 ... +60 °C
● during storage	-55 ... +80 °C
Main circuit	
number of poles for main current circuit	3
number of NO contacts for main contacts	3
number of NC contacts for main contacts	0
operating voltage	
● at AC-3 rated value maximum	690 V
● at AC-3e rated value maximum	690 V
operational current	
● at AC-3	
— at 400 V rated value	9 A
— at 500 V rated value	9 A
— at 690 V rated value	9 A
● at AC-3e	
— at 400 V rated value	9 A

Subject to change without notice
© Copyright Siemens

— at 500 V rated value	9 A
— at 690 V rated value	9 A
operating power	
● at AC-3	
— at 400 V rated value	4 kW
— at 500 V rated value	4 kW
— at 690 V rated value	7.5 kW
● at AC-3e	
— at 400 V rated value	4 kW
— at 690 V rated value	7.5 kW
● at AC-4 at 400 V rated value	4 kW
operating frequency	
● at AC-3 maximum	1 000 1/h
● at AC-3e maximum	1 000 1/h
Control circuit/ Control	
type of voltage of the control supply voltage	DC
control supply voltage 1 at DC	
● rated value	24 V
Auxiliary circuit	
number of NO contacts for auxiliary contacts	
● per direction of rotation	1
● instantaneous contact	2
contact reliability of auxiliary contacts	< 1 error per 100 million operating cycles
UL/CSA ratings	
full-load current (FLA) for 3-phase AC motor	
● at 480 V rated value	7.6 A
● at 600 V rated value	9 A
yielded mechanical performance [hp] for 3-phase AC motor	
● at 220/230 V rated value	3 hp
● at 460/480 V rated value	5 hp
● at 575/600 V rated value	7.5 hp
contact rating of auxiliary contacts according to UL	A600 / Q600
Short-circuit protection	
design of the fuse link	
● for short-circuit protection of the main circuit	
— with type of coordination 1 required	gG NH 3NA, DIAZED 5SB, NEOZED 5SE: 63 A
— with type of assignment 2 required	gG NH 3NA, DIAZED 5SB, NEOZED 5SE: 25 A
● for short-circuit protection of the auxiliary switch required	fuse gG: 10 A
Installation/ mounting/ dimensions	
mounting position	+/-180° rotation possible on vertical mounting surface; can be tilted forward and backward by +/- 22.5° on vertical mounting surface
fastening method	screw and snap-on mounting onto 35 mm DIN rail
height	101 mm
width	90 mm
depth	97 mm
required spacing	
● with side-by-side mounting	
— forwards	6 mm
— backwards	0 mm
— upwards	6 mm
— downwards	6 mm
— at the side	6 mm
● for grounded parts	
— forwards	6 mm
— backwards	0 mm
— upwards	6 mm
— at the side	6 mm
— downwards	6 mm
● for live parts	
— forwards	6 mm
— backwards	0 mm

Subject to change without notice
© Copyright Siemens

— upwards	6 mm
— downwards	6 mm
— at the side	6 mm
Connections/ Terminals	
type of electrical connection	
• for main current circuit	screw-type terminals
• for auxiliary and control circuit	screw-type terminals
• at contactor for auxiliary contacts	Screw-type terminals
• of magnet coil	Screw-type terminals
type of connectable conductor cross-sections for main contacts	
• solid	2x (1 ... 2.5 mm²), 2x (2.5 ... 10 mm²)
• solid or stranded	2x (1 ... 2.5 mm²), 2x (2.5 ... 10 mm²)
• finely stranded with core end processing	2x (1 ... 2.5 mm²), 2x (2.5 ... 6 mm²), 1x 10 mm²
type of connectable conductor cross-sections	
• for auxiliary contacts	
— solid or stranded	2x (0.5 ... 1.5 mm²), 2x (0.75 ... 2.5 mm²)
— finely stranded with core end processing	2x (0.5 ... 1.5 mm²), 2x (0.75 ... 2.5 mm²)
• for AWG cables for auxiliary contacts	2x (20 ... 16), 2x (18 ... 14)
Safety related data	
product function suitable for safety function	Yes
Electrical Safety	
protection class IP on the front according to IEC 60529	IP20
touch protection on the front according to IEC 60529	finger-safe, for vertical contact from the front
Communication/ Protocol	
product function bus communication	Yes
protocol is supported AS-Interface protocol	No
product function control circuit interface with IO link	No
Approvals Certificates	

General Product Approval

CSA	EG-Konf.	UK CA	Confirmation	UL	EAC

Test Certificates	Marine / Shipping				
Special Test Certificate	ABS	BUREAU VERITAS	DNV	RINA	RMRS

other	Railway	Dangerous goods	Environment
Confirmation	Special Test Certificate	Transport Information	Environmental Confirmations

Further information

Information on the packaging
https://support.industry.siemens.com/cs/ww/en/view/109813875
Information- and Downloadcenter (Catalogs, Brochures,…)
https://www.siemens.com/ic10
Industry Mall (Online ordering system)
https://mall.industry.siemens.com/mall/en/en/Catalog/product?mlfb=3RA2323-8XB30-1BB4
Cax online generator
http://support.automation.siemens.com/WW/CAXorder/default.aspx?lang=en&mlfb=3RA2323-8XB30-1BB4
Service&Support (Manuals, Certificates, Characteristics, FAQs,...)
https://support.industry.siemens.com/cs/ww/en/ps/3RA2323-8XB30-1BB4
Image database (product images, 2D dimension drawings, 3D models, device circuit diagrams, EPLAN macros, ...)
http://www.automation.siemens.com/bilddb/cax_de.aspx?mlfb=3RA2323-8XB30-1BB4&lang=en
Characteristic: Tripping characteristics, I²t, Let-through current

Subject to change without notice
© Copyright Siemens

https://support.industry.siemens.com/cs/ww/en/ps/3RA2323-8XB30-1BB4/char

Further characteristics (e.g. electrical endurance, switching frequency)

http://www.automation.siemens.com/bilddb/index.aspx?view=Search&mlfb=3RA2323-8XB30-1BB4&objecttype=14&gridview=view1

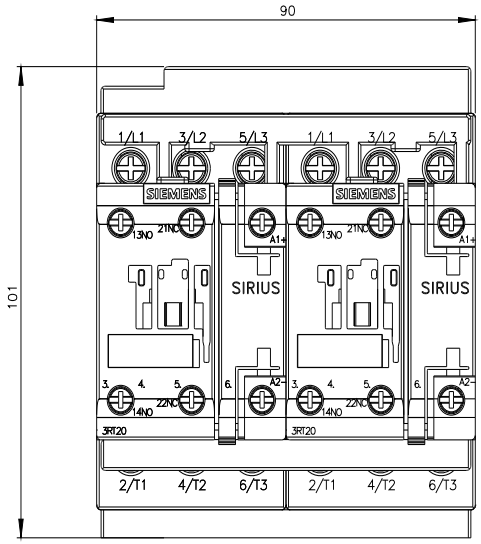

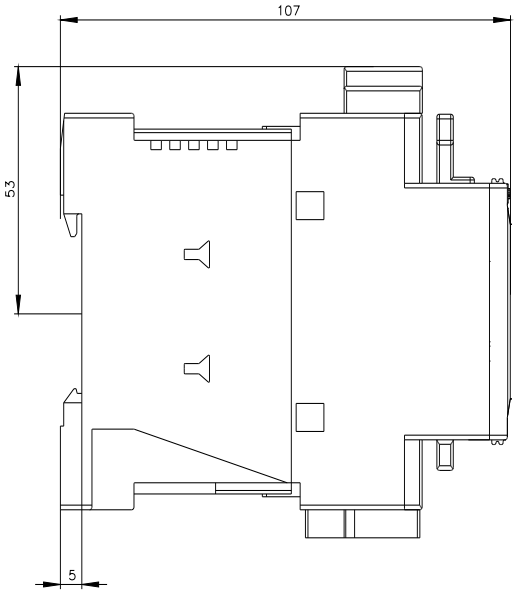

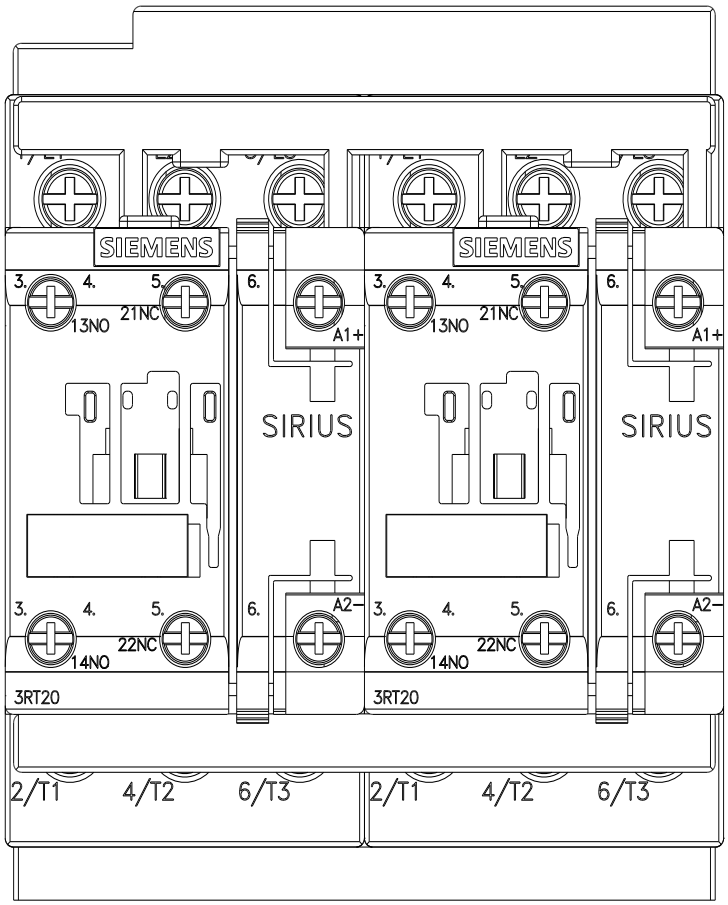

Subject to change without notice
© Copyright Siemens

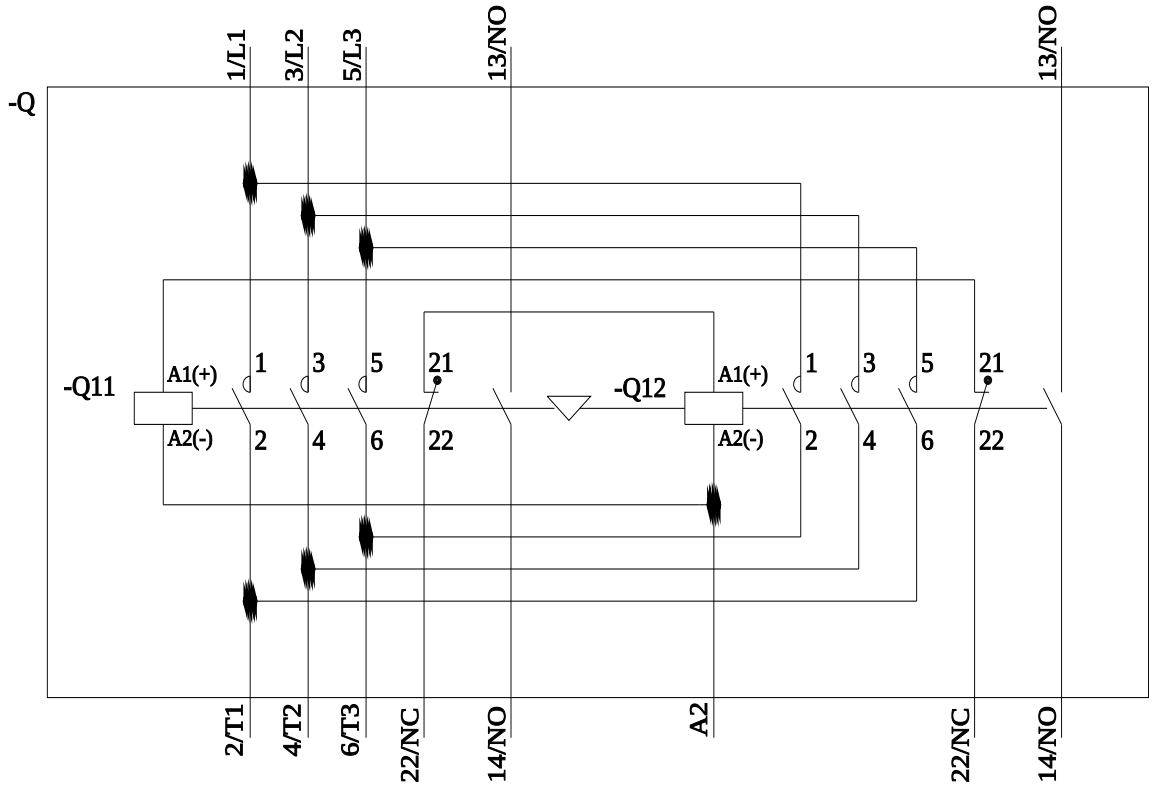

last modified: 7/9/2024

Subject to change without notice
© Copyright Siemens